60″ ELECTRIC FIREPLACE ENTERTAINMENT CENTER WITH DOOR SENSOR

ASSEMBLY, CARE & USE INSTRUCTIONS

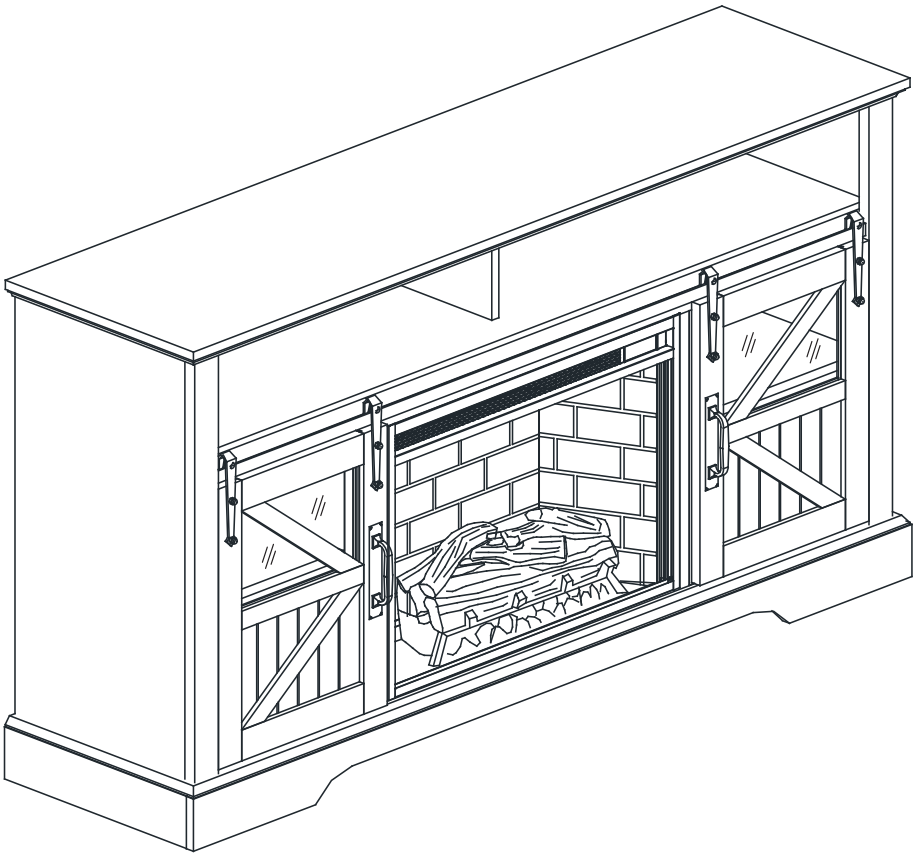

THANK YOU

We appreciate the trust to purchase our electric fireplace media mantel. We strive to continually create quality products designed to enhance your home. Visit us online to see our full line of products available for your home improvement needs. Thank you for choosing us!

ASSEMBLY TIPS

Before you begin, locate the instructions and hardware. Take out all the parts and compare them to the diagramsbelow. Be sure you have all the parts and can identify them.
Two people are required to assemble this product. Assembly time will take approximately 30-90 minutes.
Before assembly, use scissors to unwrap the parts from the packaging.
DO NOT use a box cutter or exacto-knife as you may cut into the mantel pieces inside the box and damage the finish. Check for the hardware bag which is RED and located inside the packaging, taped to the top box.
DO NOT discard any pieces.

CAUTION

There are small components used in the construction of this product.
Loose items should be kept away from pets and children to avoid a choking hazard.keep all plastic and packaging film away from pets and children to avoid suffocation.

CARE AND MAINTENANCE

1. Dust your fireplace mantel regularly with a soft non-lint producing cloth or household dusting product.
2. You can clean your fireplace insert with a gentle non-abrasive household cleaner. Make sure to dry your fireplace immediately with a soft cloth or towel.

TOOLS REQUIRED (NOT INCLUDED)

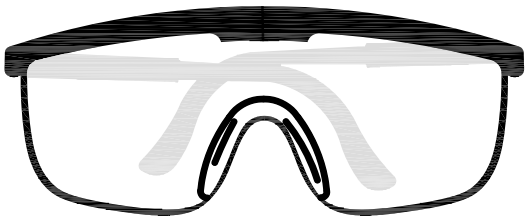

Safety goggles

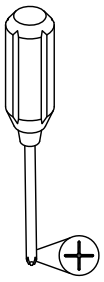

Phillips screwdriver

PACKAGE CONTENTS

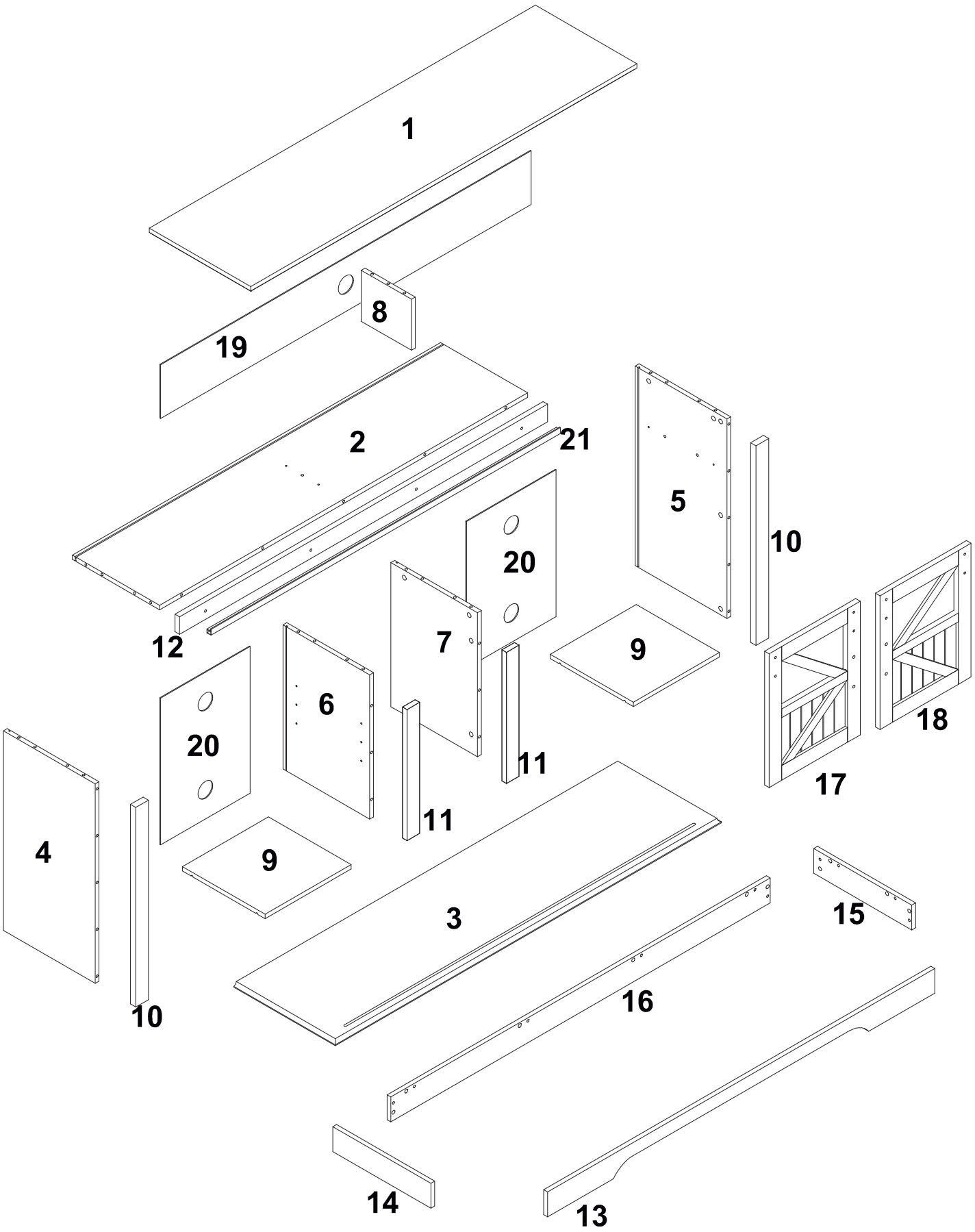

Hardware List

A		φ8x30mm	Wood dowel	30+1 pcs
B		φ6x35mm	Cam bolt	29+1 pcs
C		φ15x11mm	Cam lock	29+1 pcs
D			Sticker	29+1 pcs
E			Plate	4 pcs
F		φ8x5x16mm	Shelf support pin	8 pcs
G		1/4x12mm	Bolt	32+1 pcs
H			Plastic wedge	16 pcs
I		φ3x17mm	Flat-head screw	16 pcs
J		M 4	Hex key	1 pcs
K			Pulley	4 pcs
L			Nut	8 pcs
M		1/4x25mm	Bolt	12 pcs
N			Connector	16 pcs
O			Wrench	1 pcs
P		φ4x22mm	Handle bolt	4 pcs
Q			Handle	2 Set
R		φ4x12mm	Screw	12 pcs
S		φ6x50mm	Screw	8 pcs
T			Anti-Tipping Device	2 set
U			Nut	2 pcs

Step 1

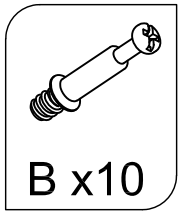

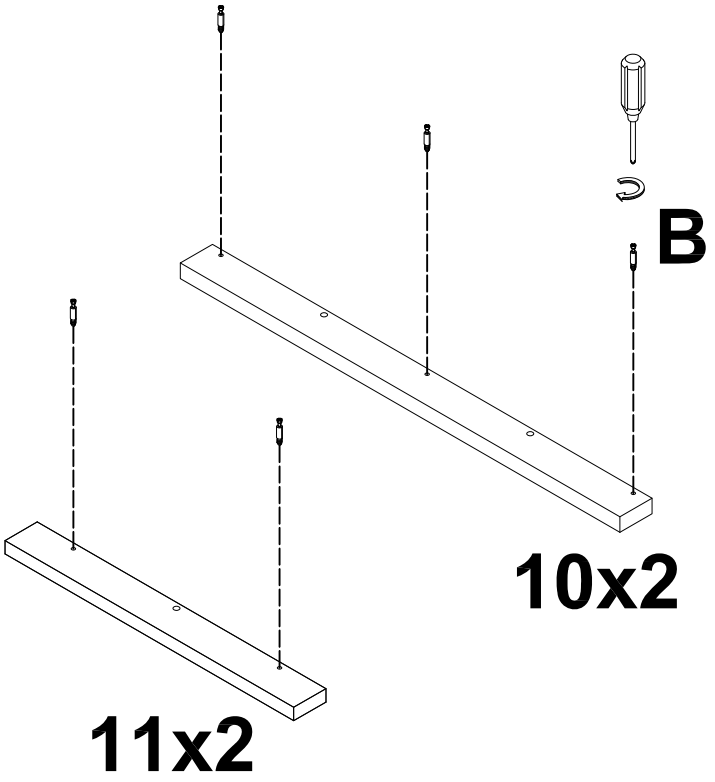

Step 2

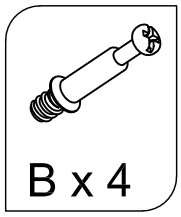

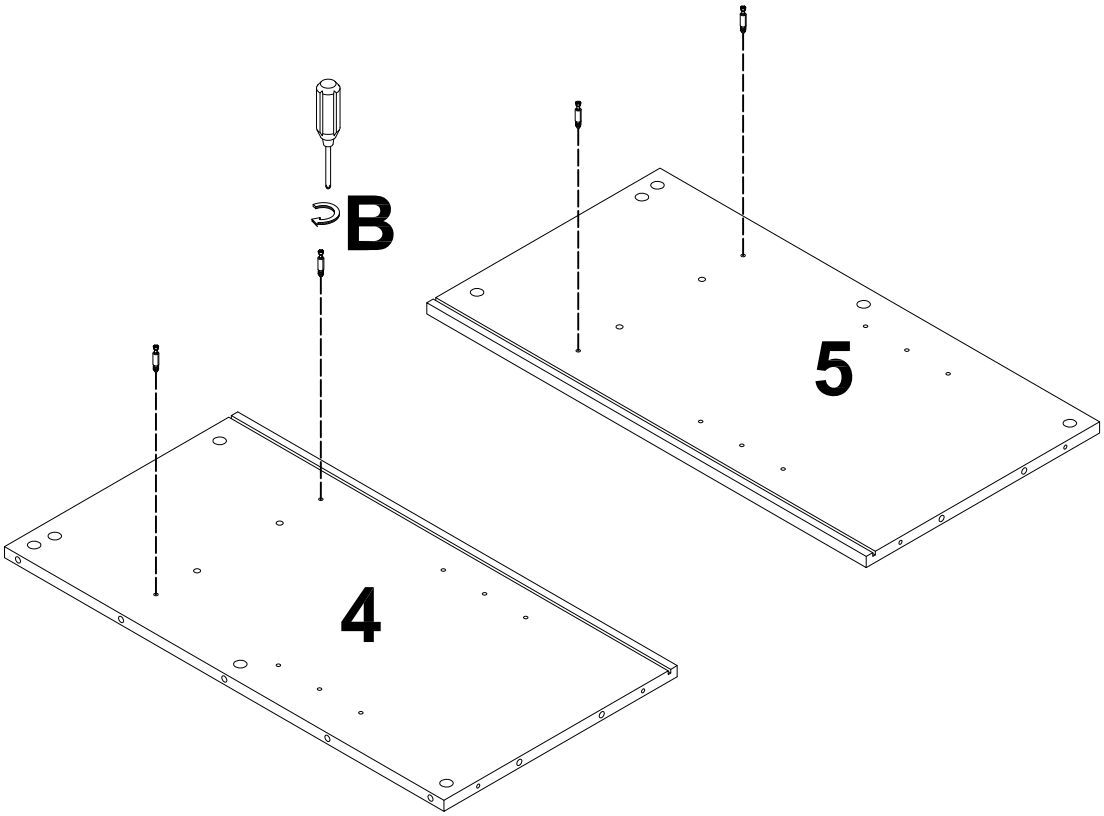

Step 3

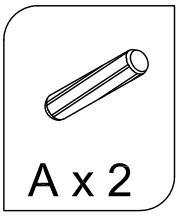

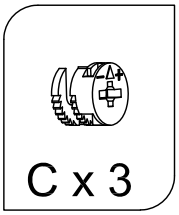

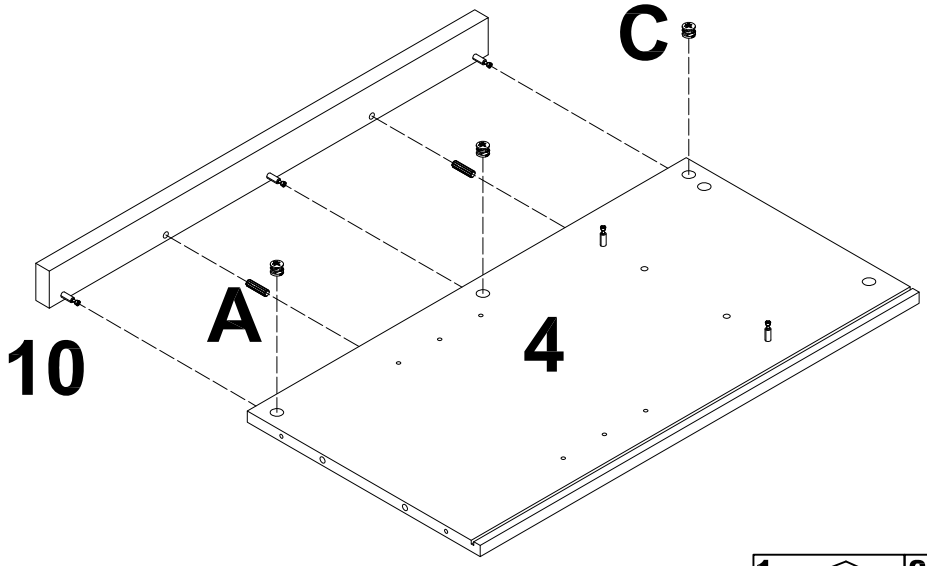

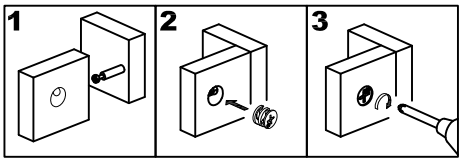

Step 4

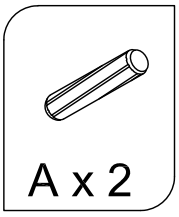

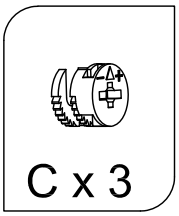

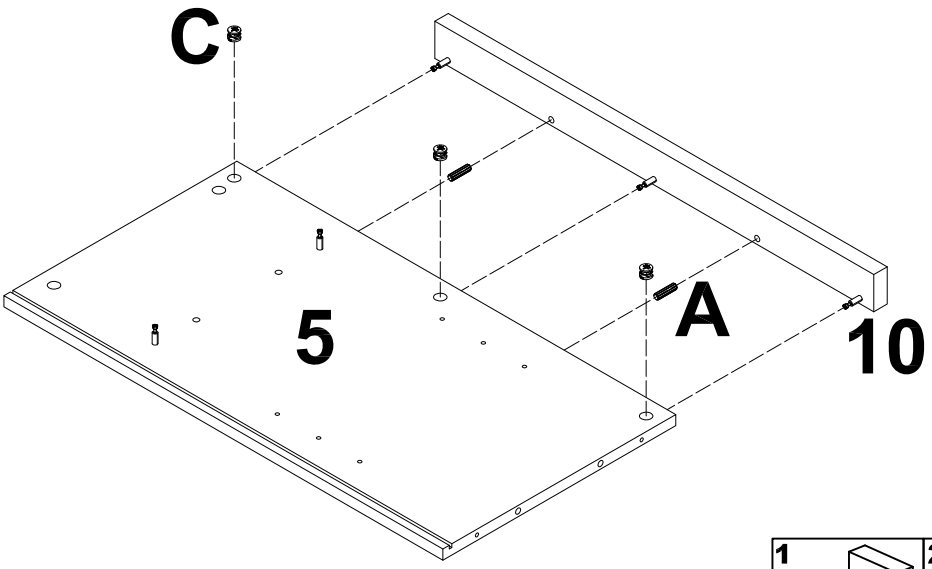

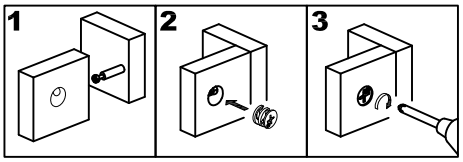

Step 5

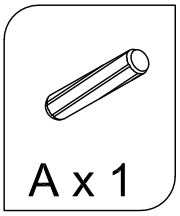

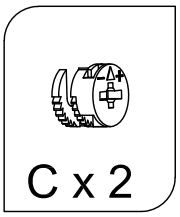

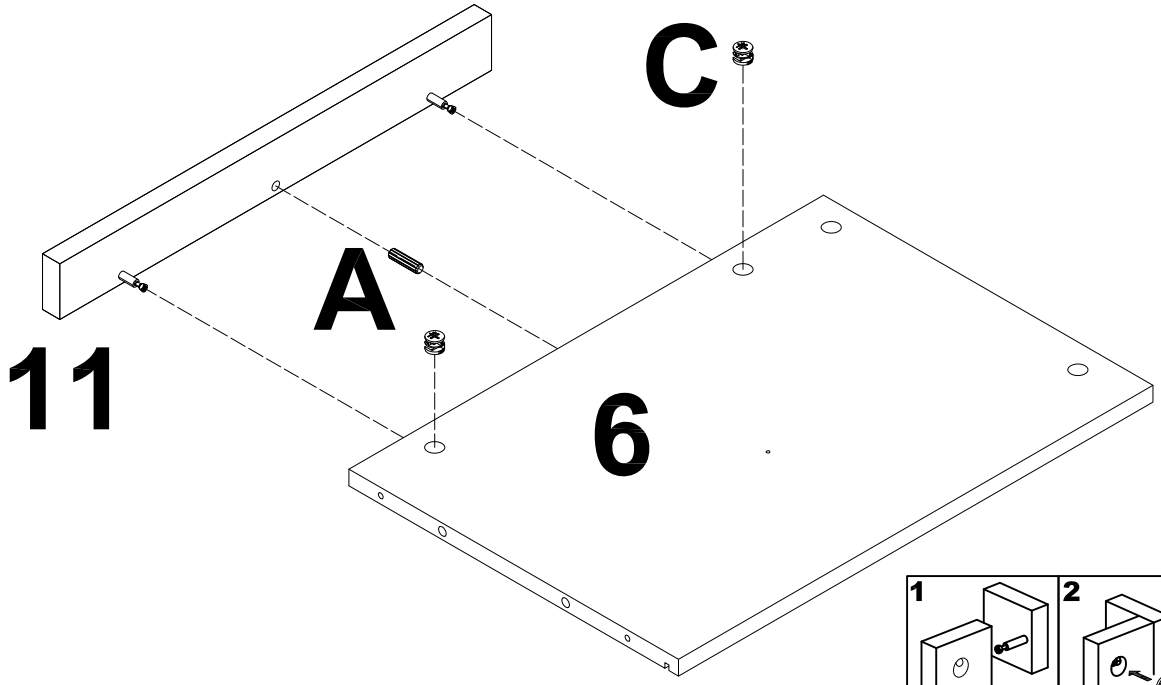

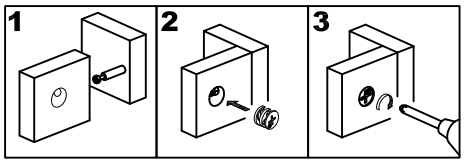

Step 6

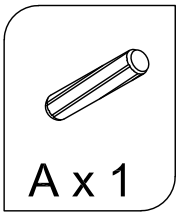

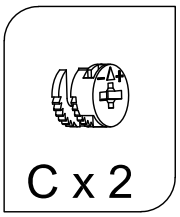

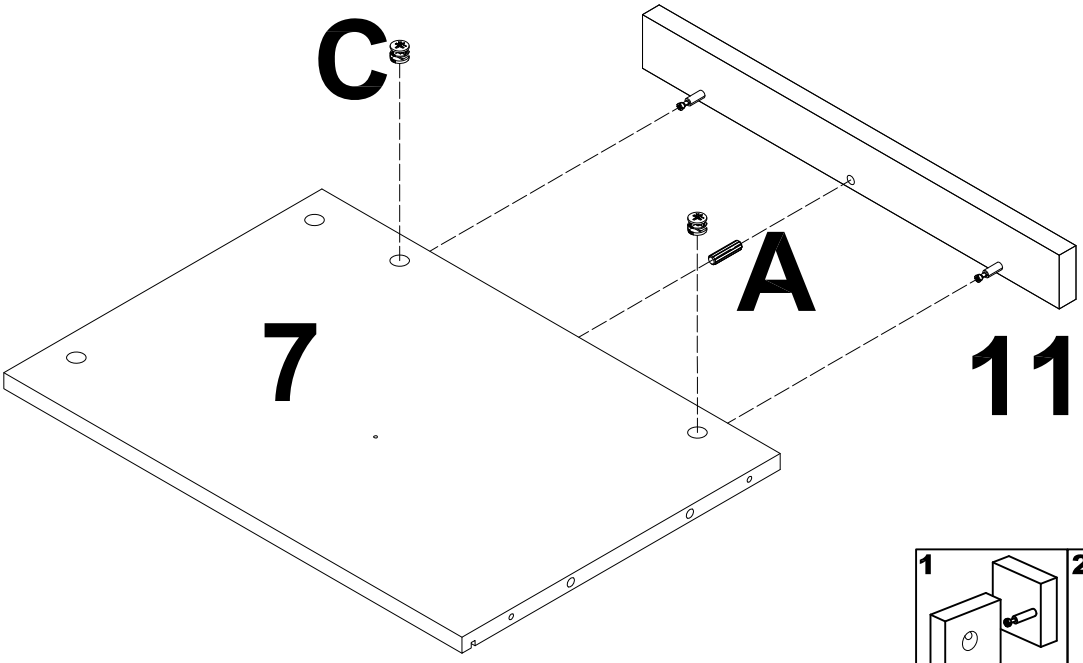

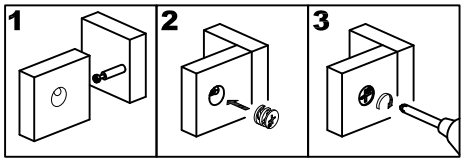

Step 7

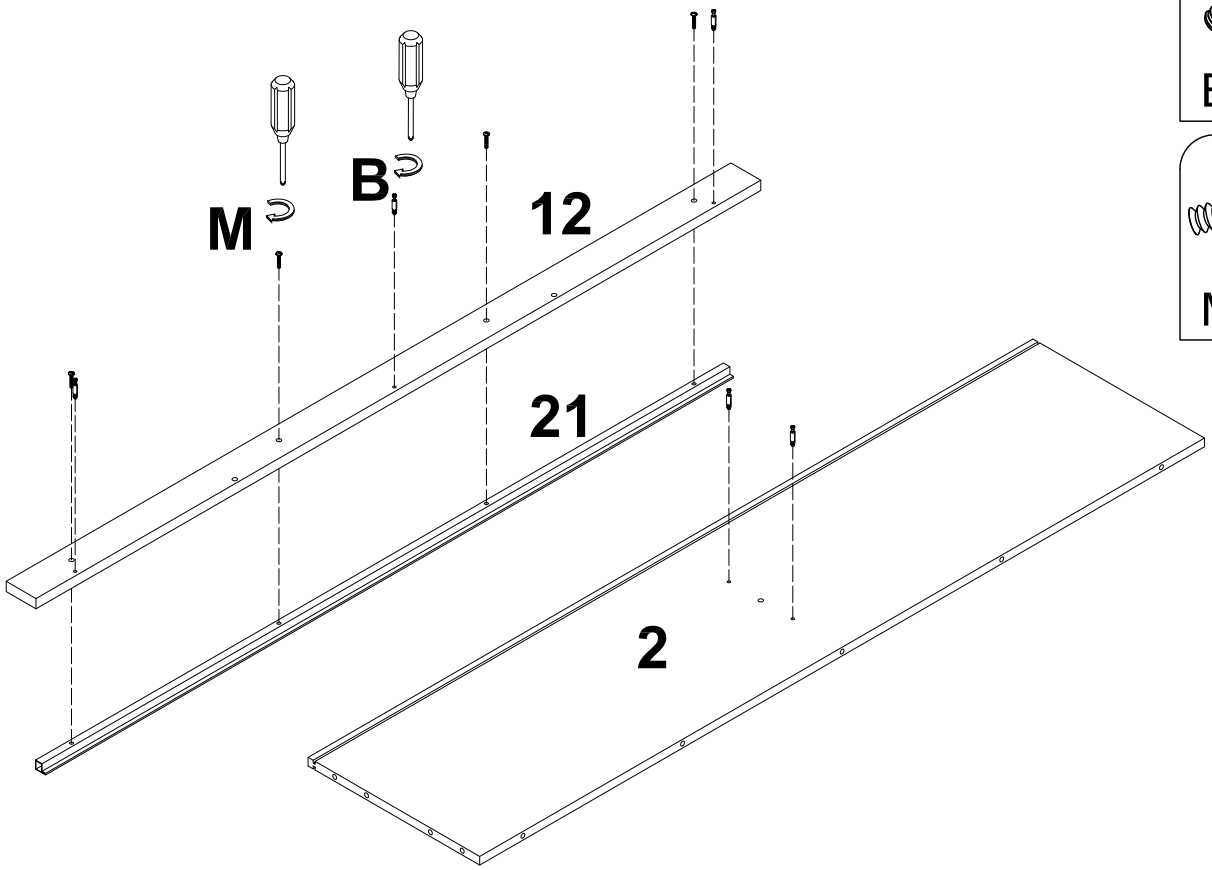

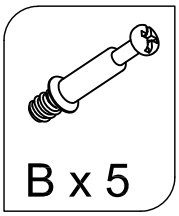

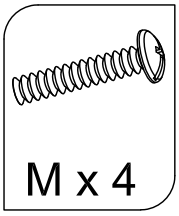

Step 8

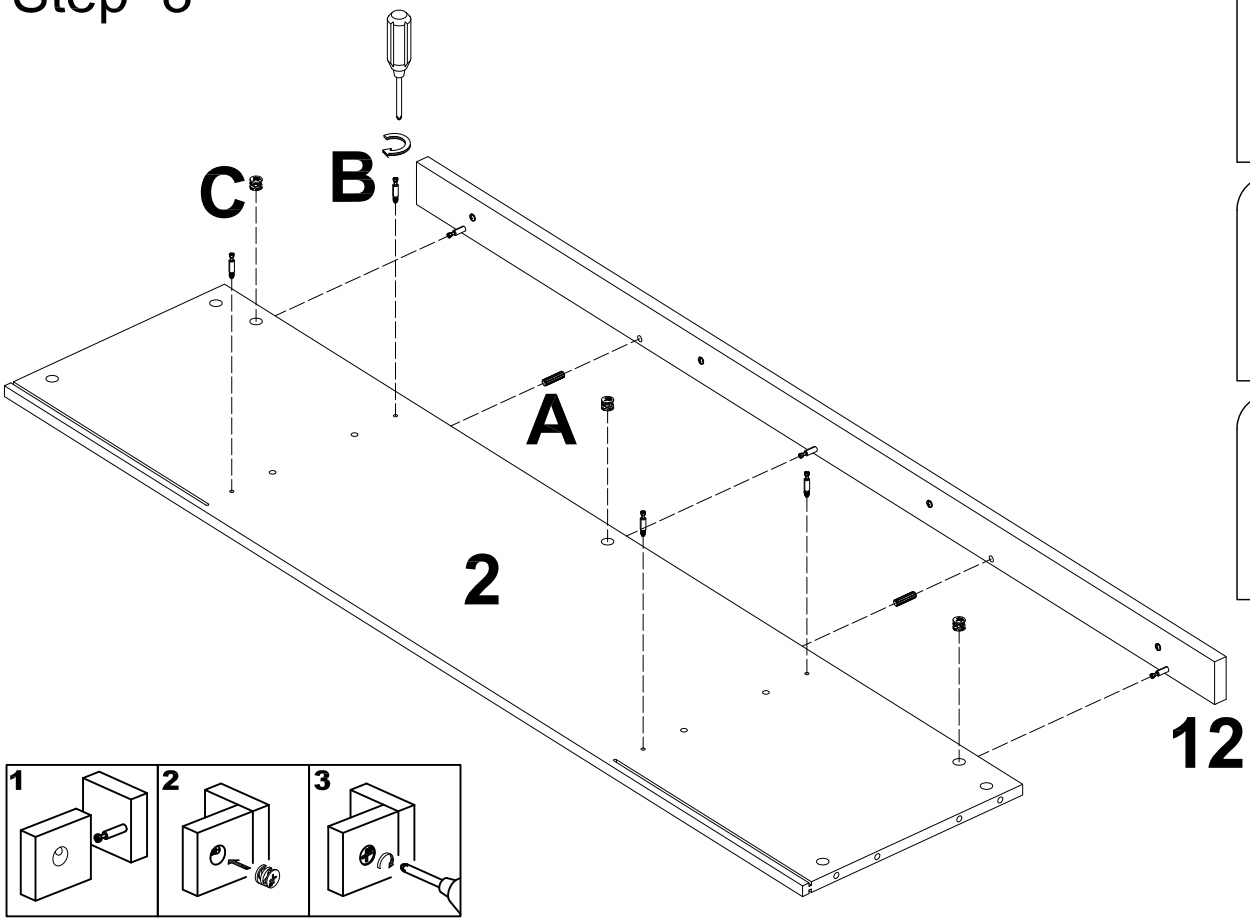

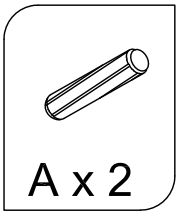

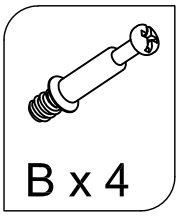

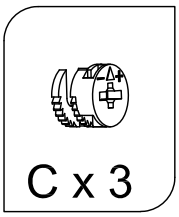

Step 9

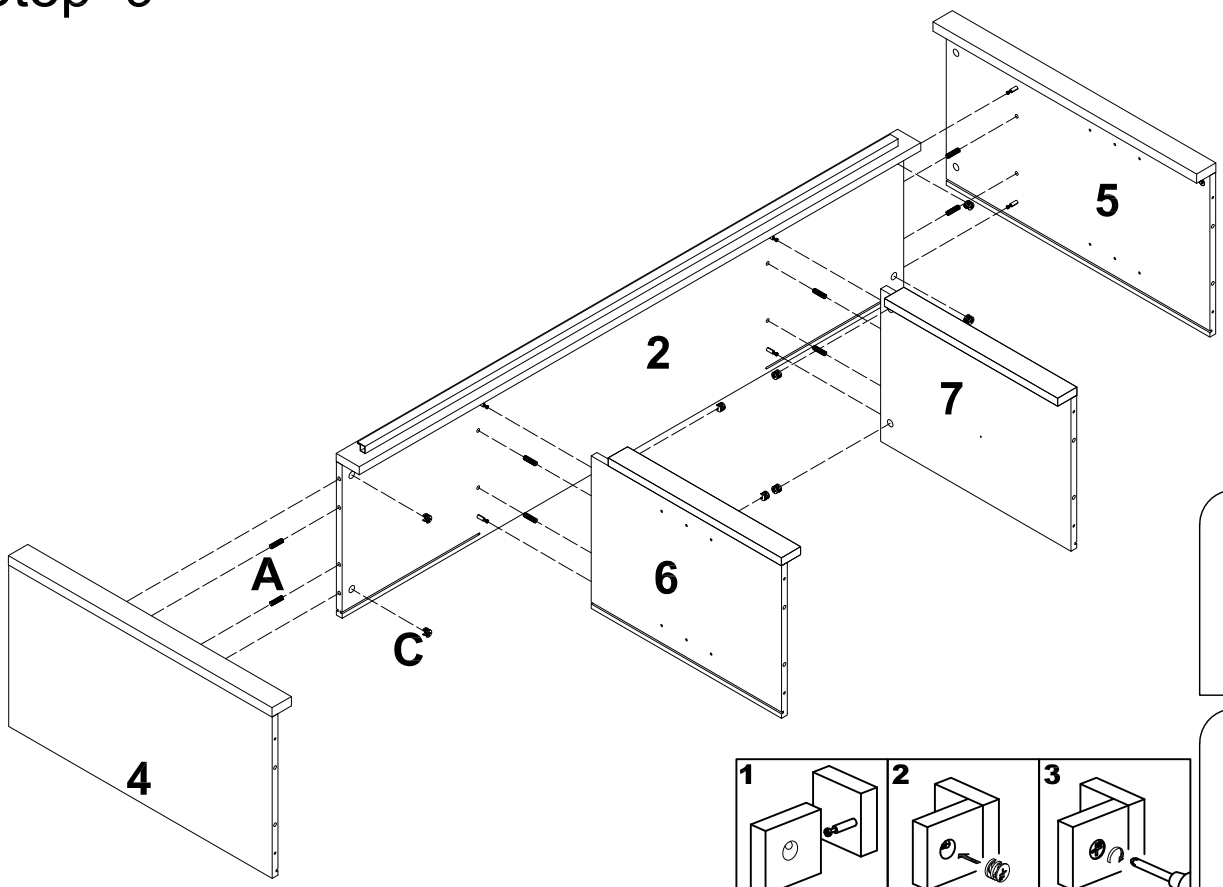

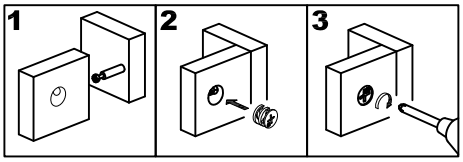

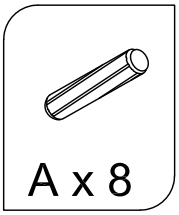

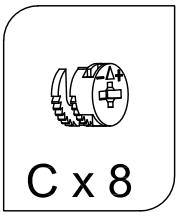

Step 10

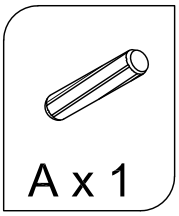

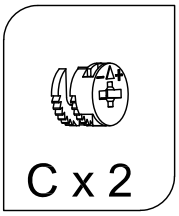

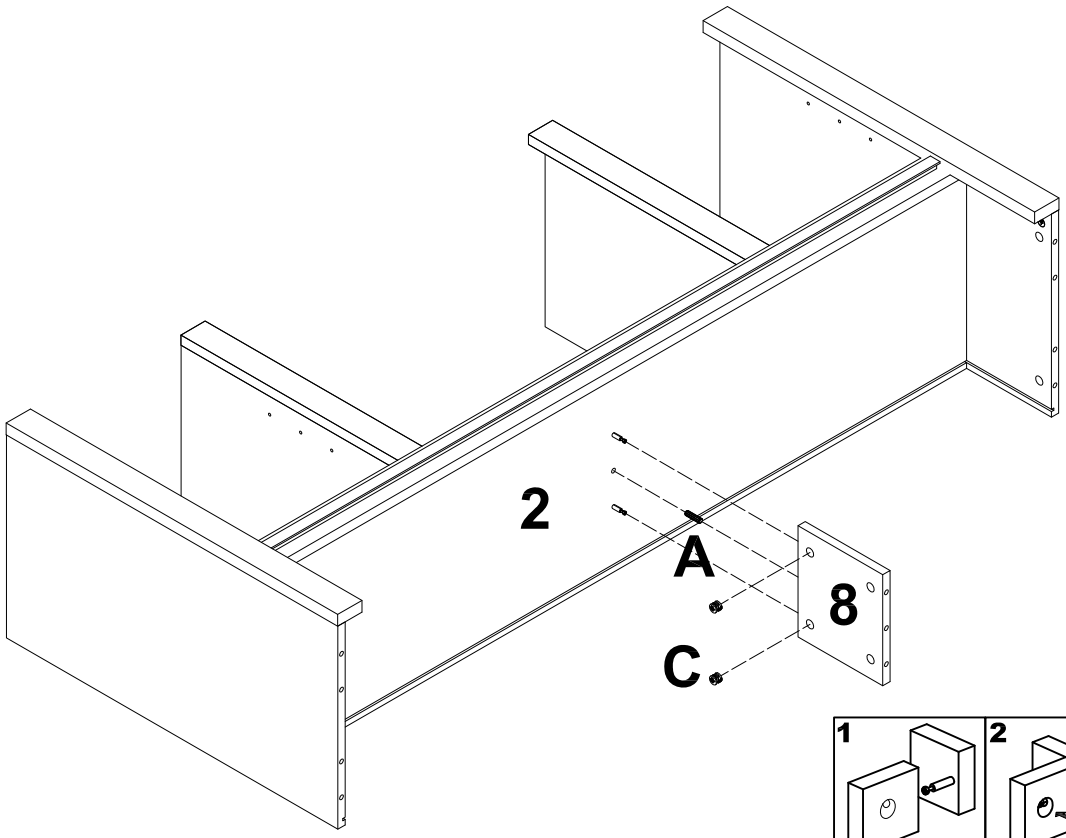

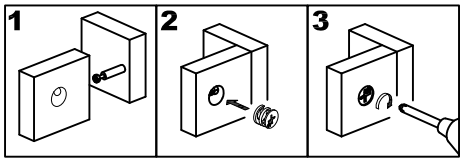

Step 11

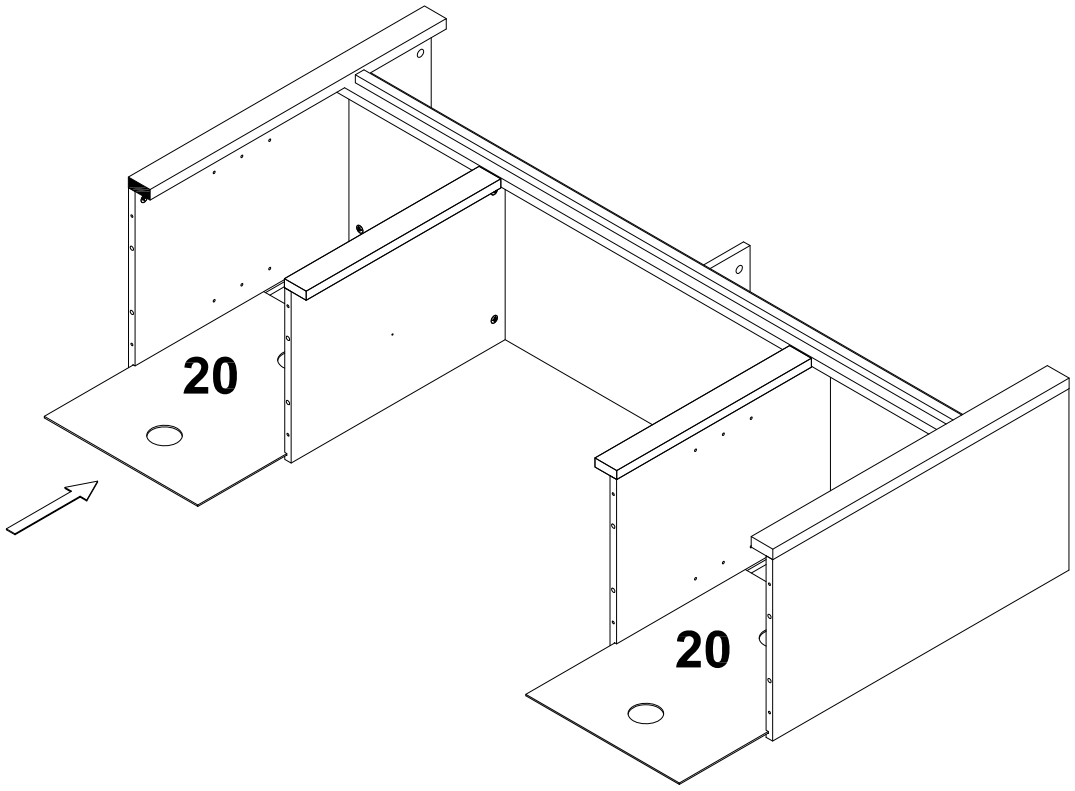

Step 12

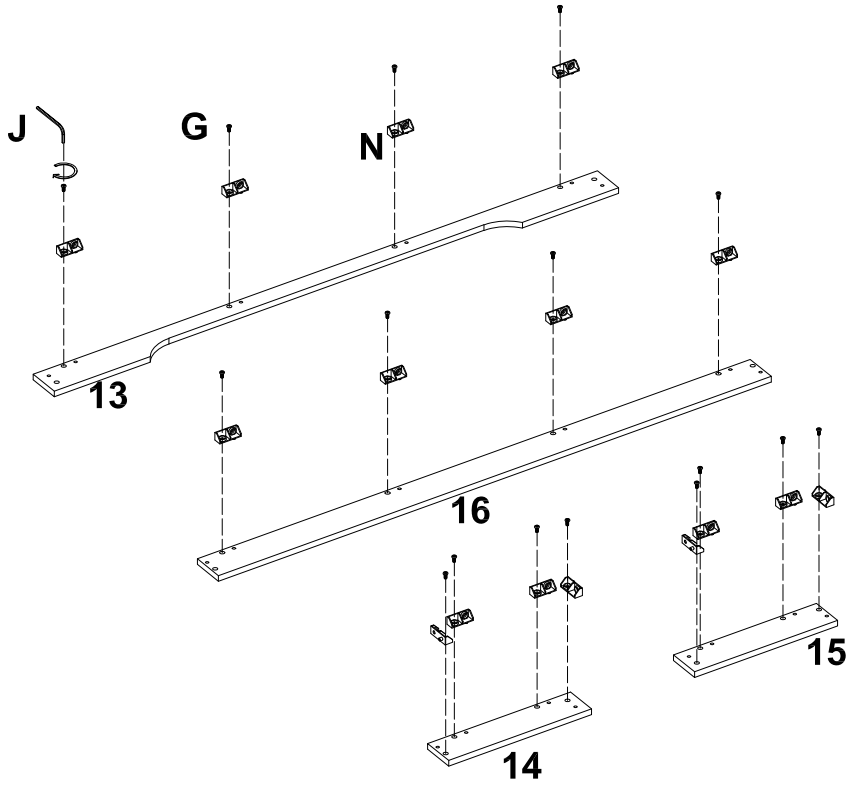

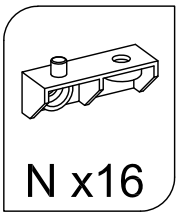

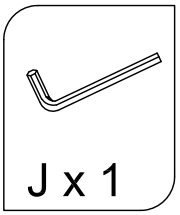

Step 13

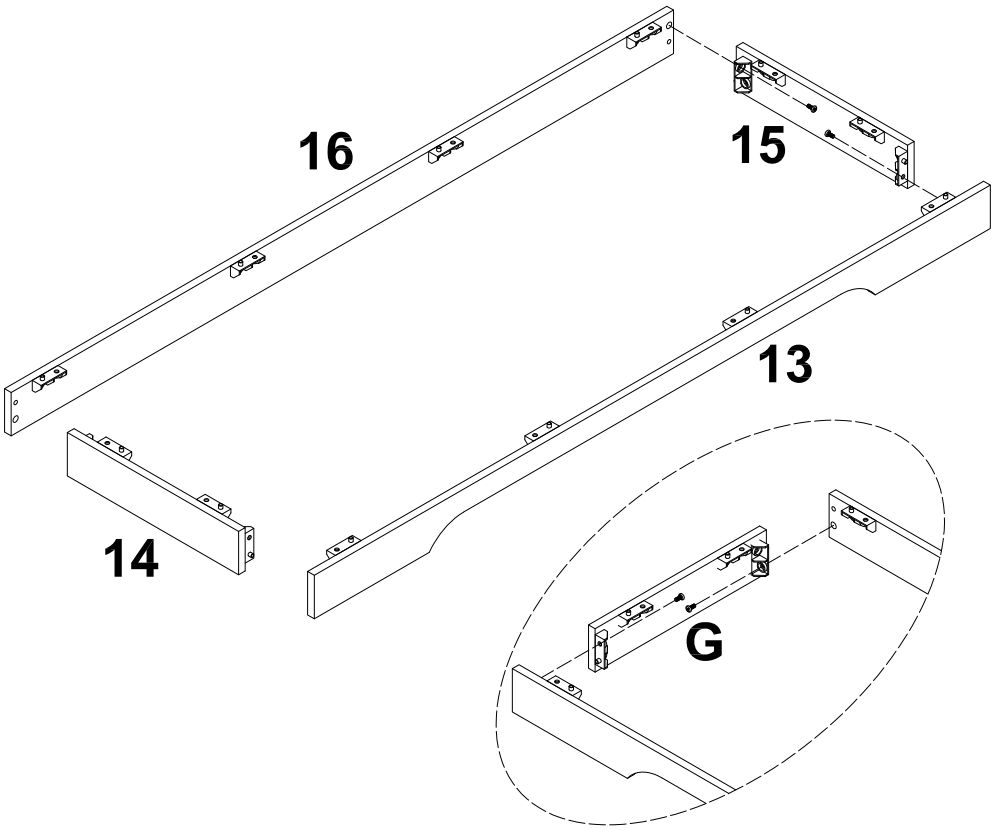

G x 4

Step 14

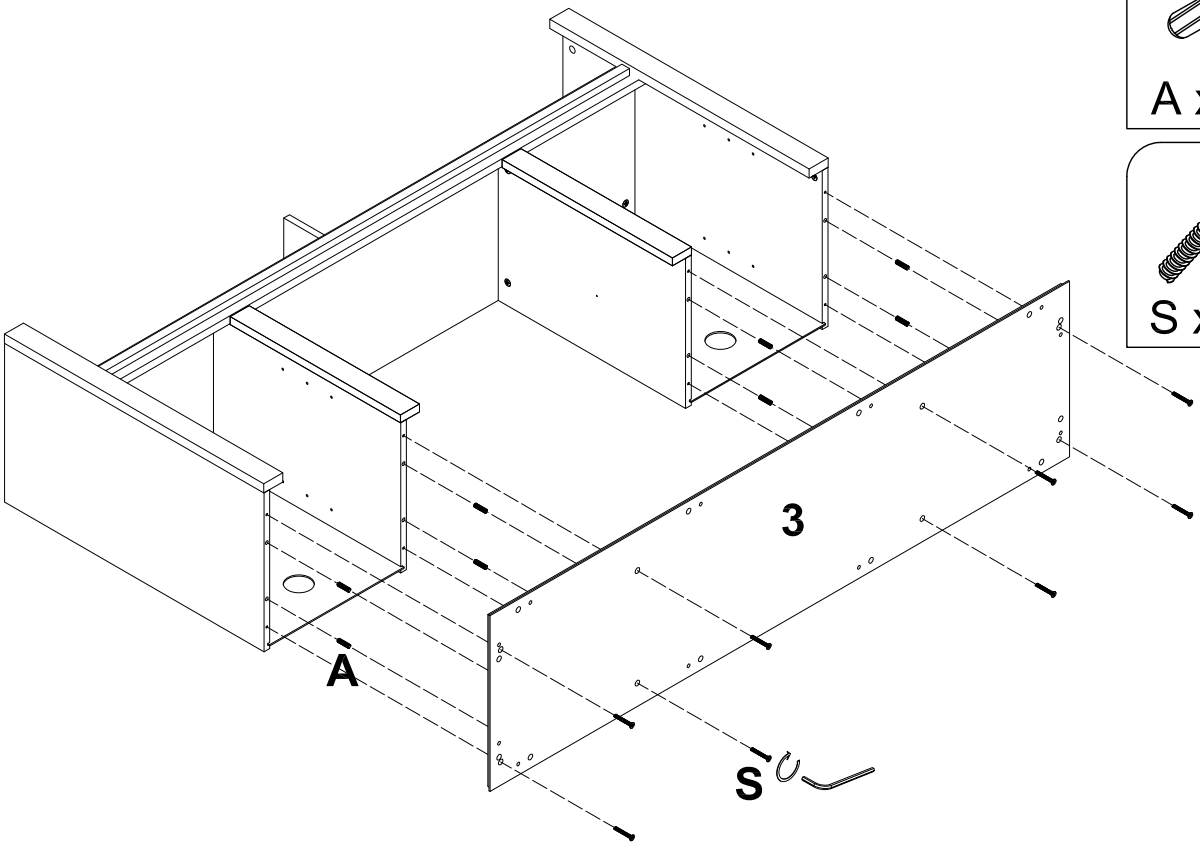

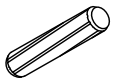

A x 8

S x 8

Step 15

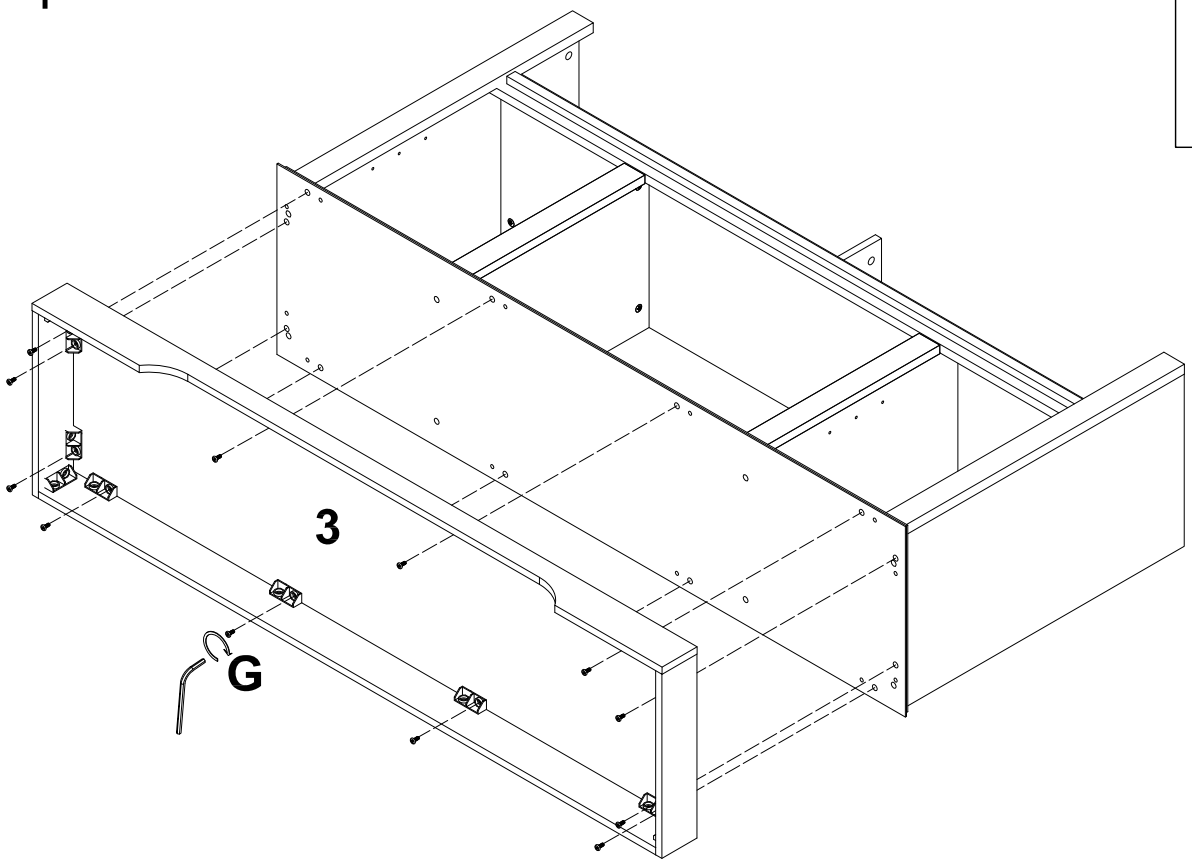

Step 16

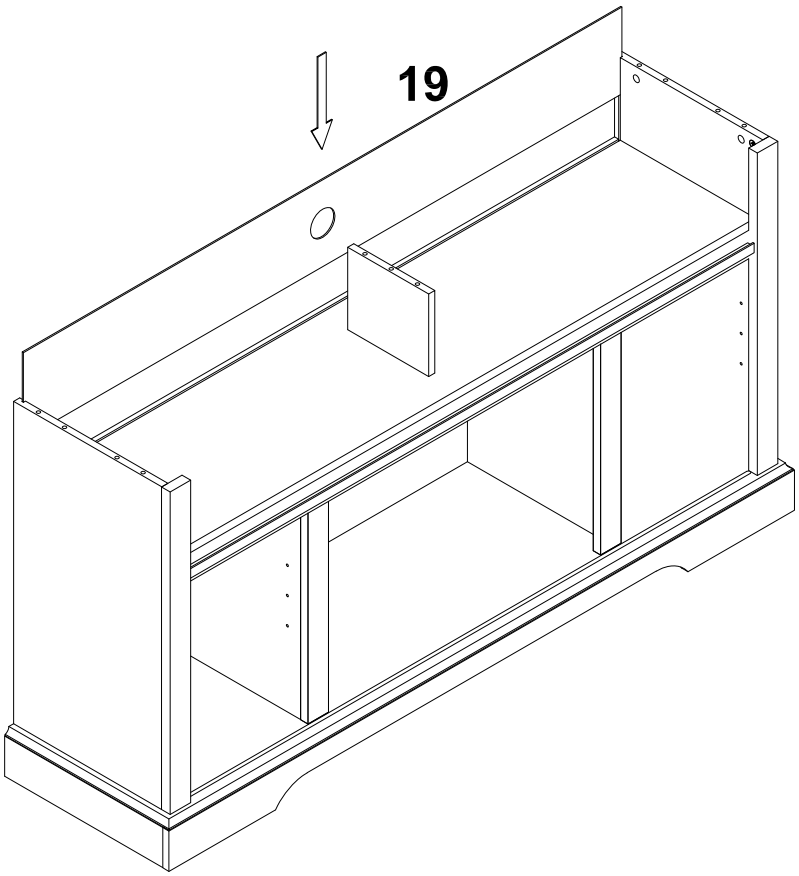

Step 17

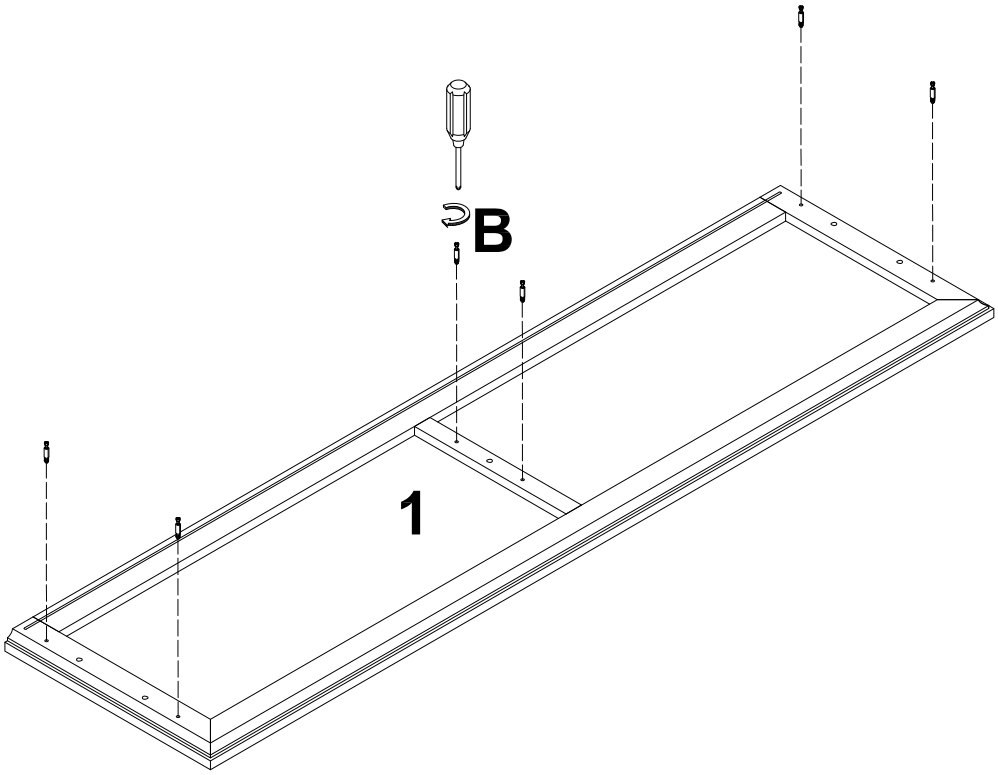

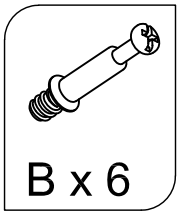

Step 18

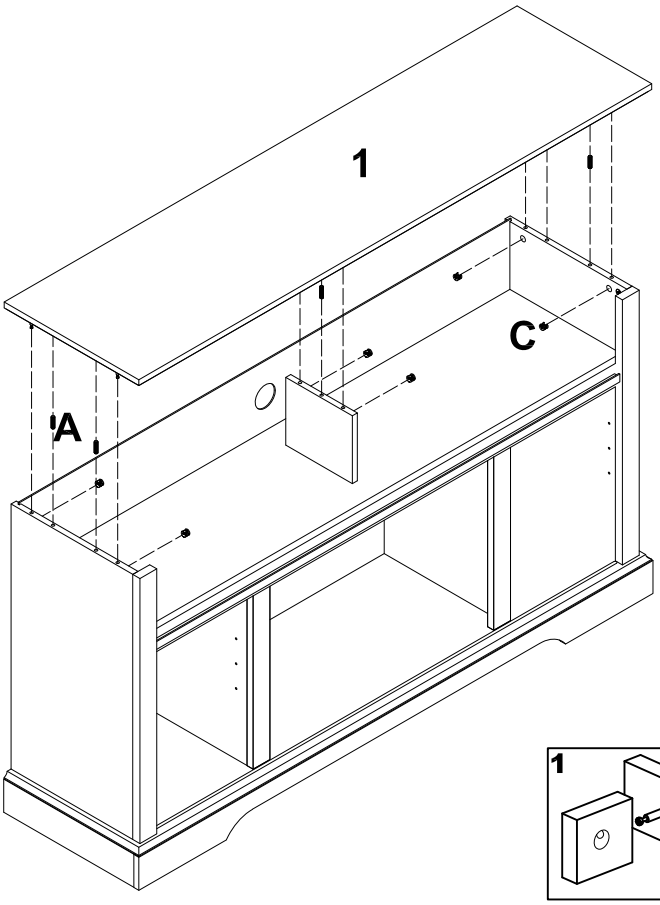

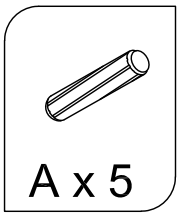

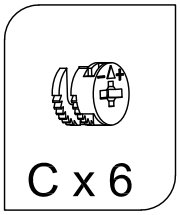

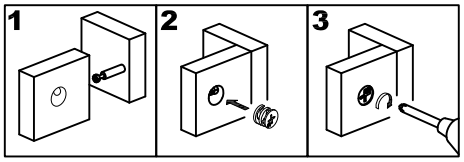

Step 19

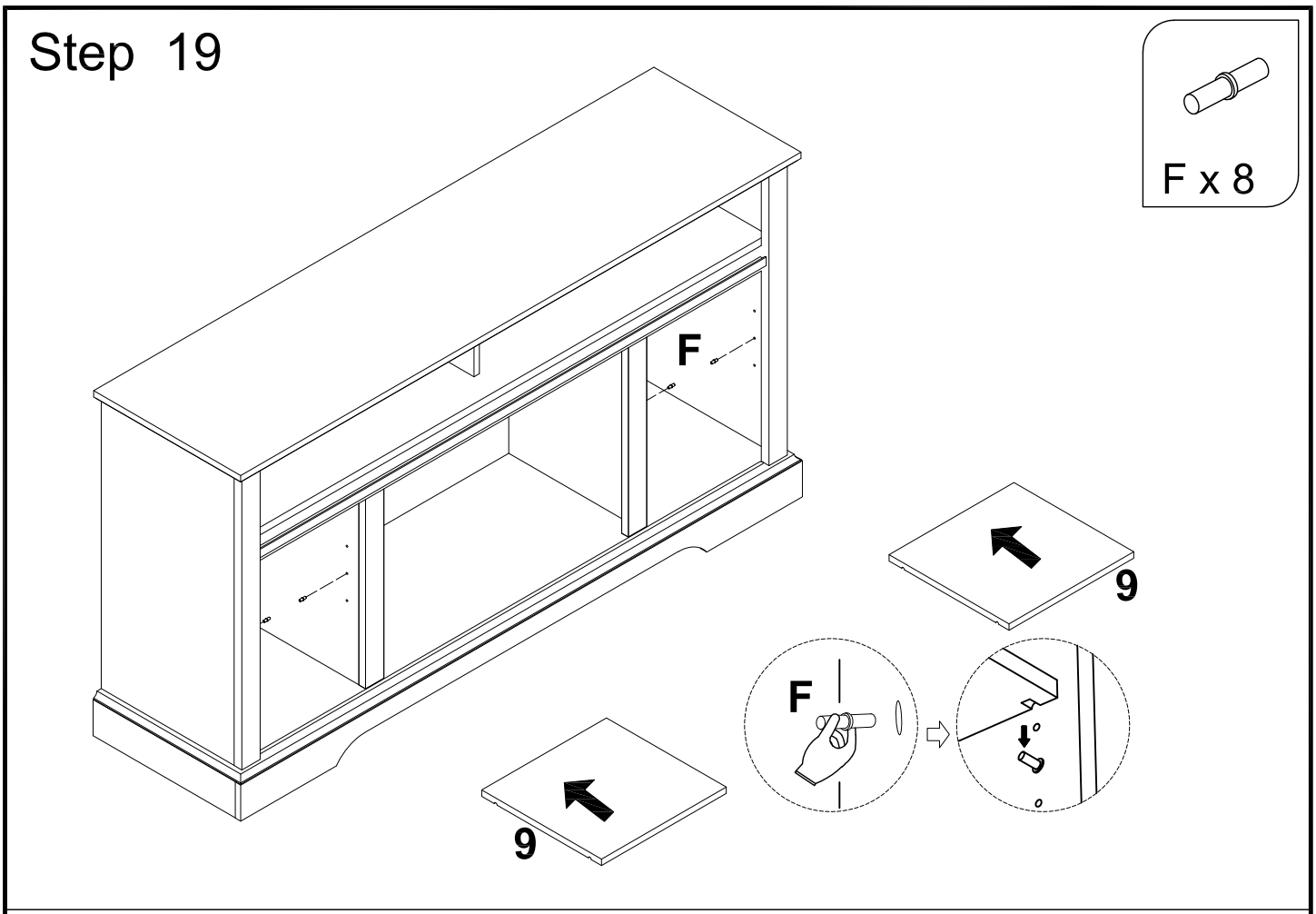

Step 20

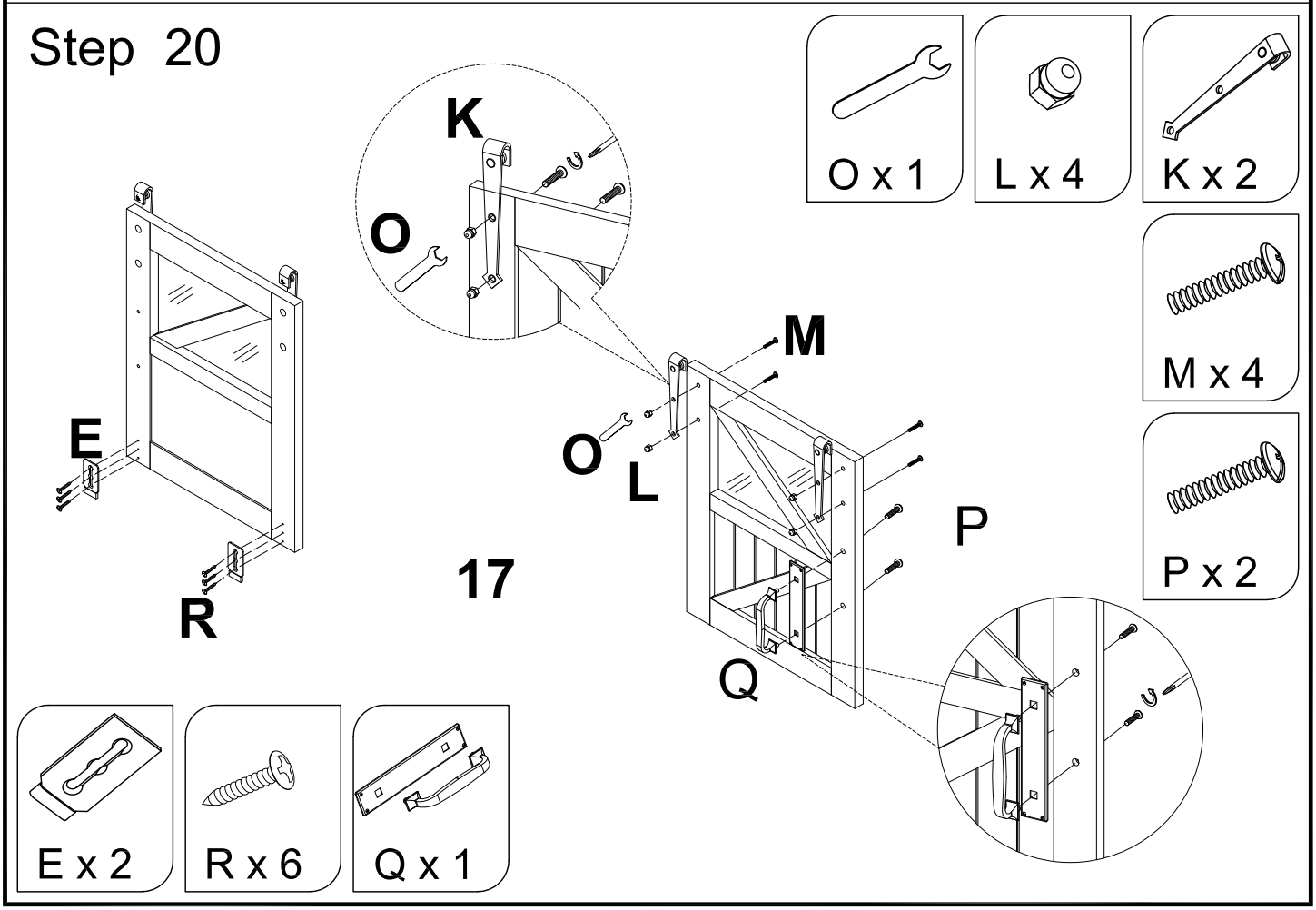

Step 21

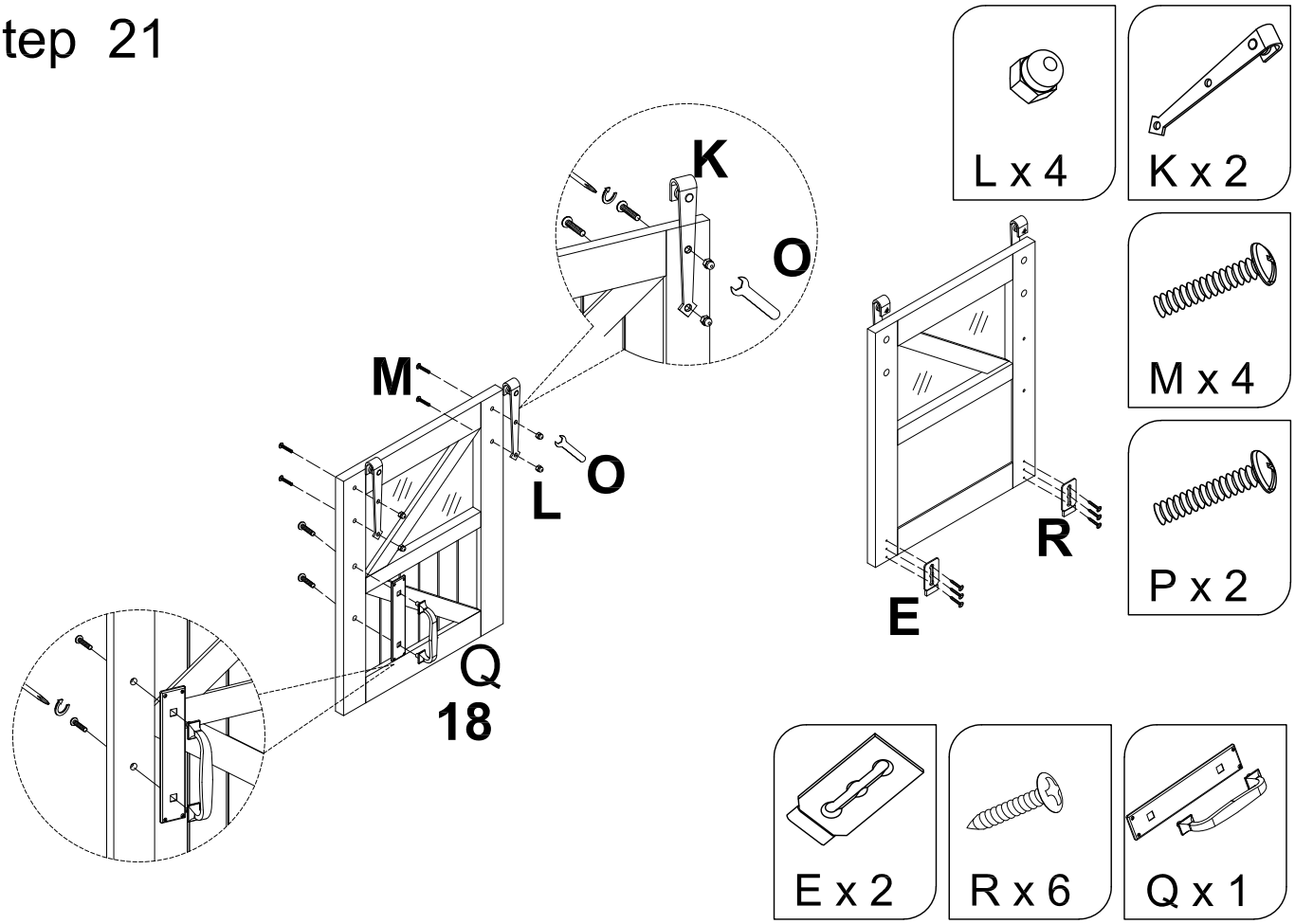

Step 22

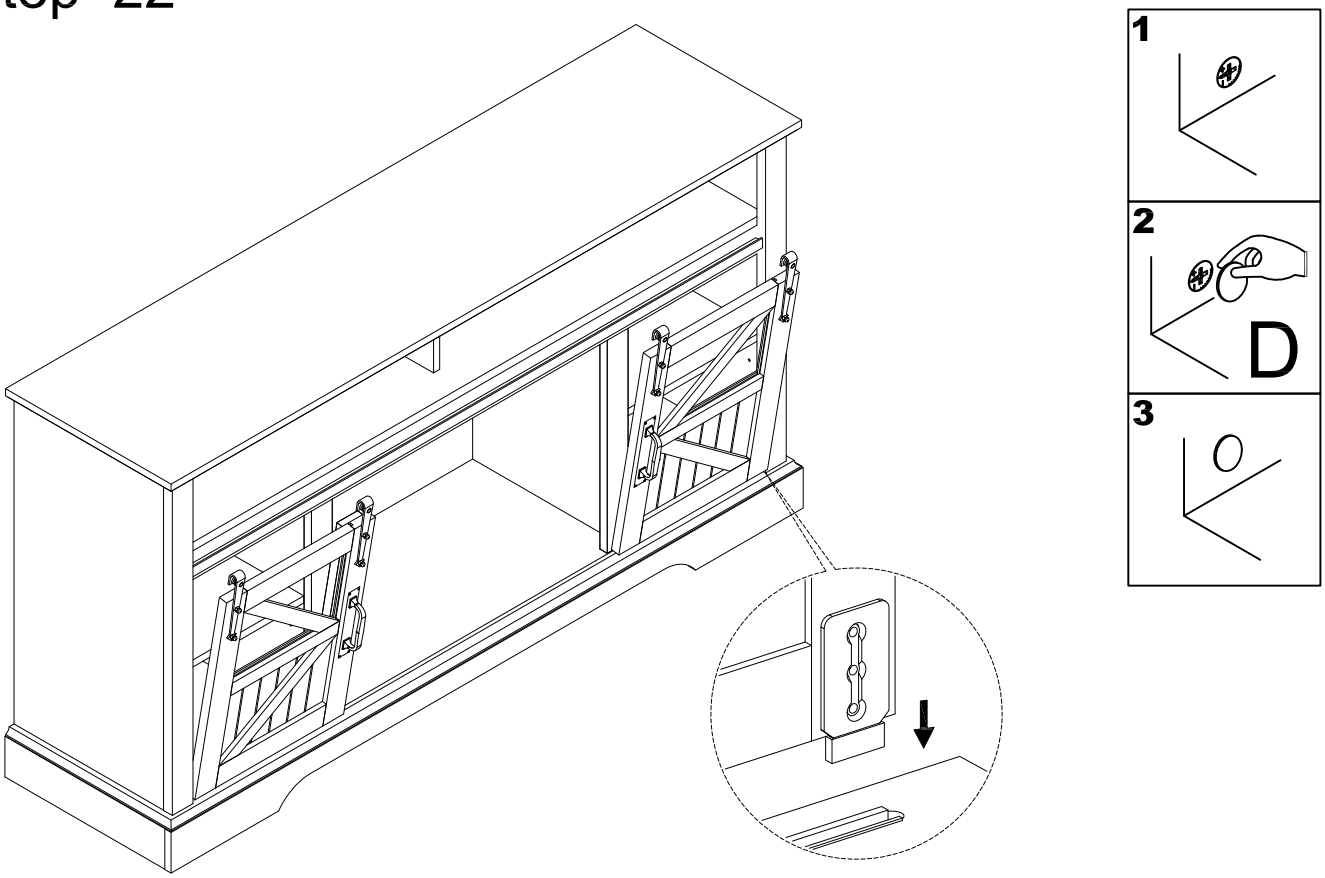

Step 23

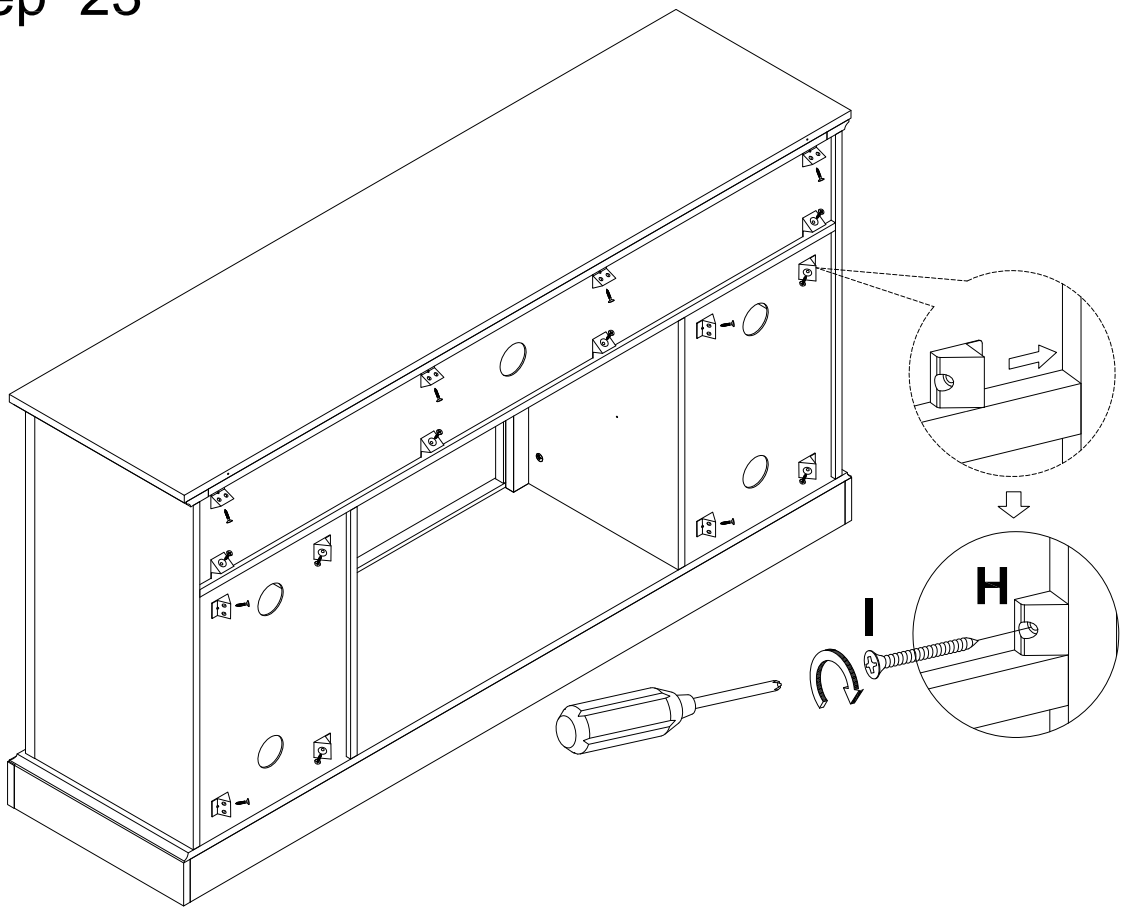

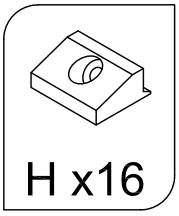

Step 24

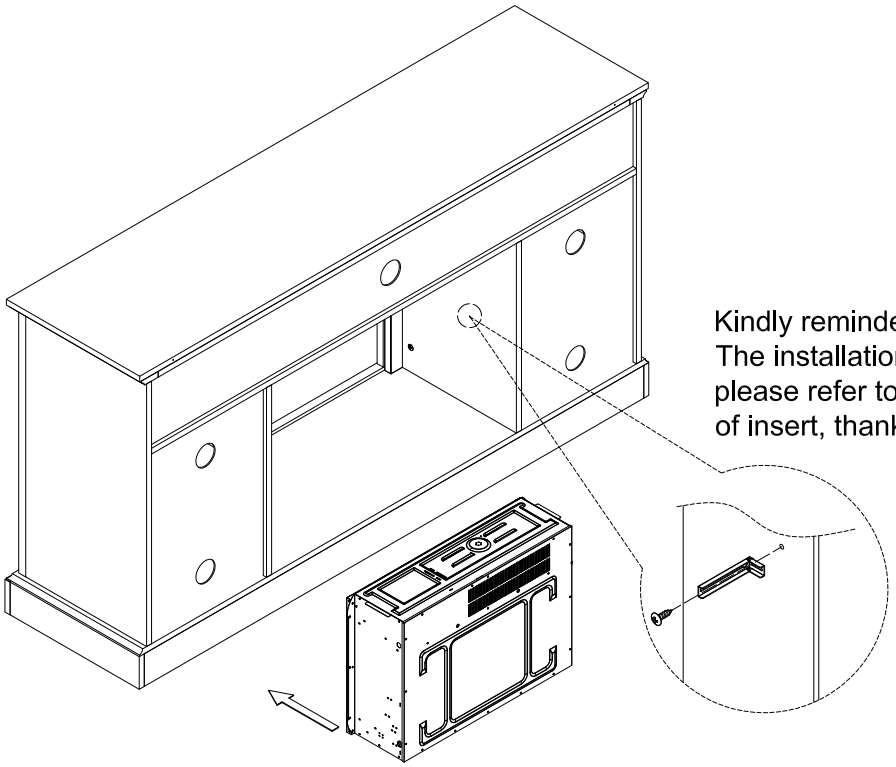

Kindly reminder：
The installation of insert, please refer to the instruction of insert, thanks!

Step 25

WARNING

Serious or fatal injuries can occur from furniture tipping over. To prevent the furniture from tipping over we recommend that it is permanently fixed to the wall. Wall anchor and hardware are included with this product. Please make sure hardware is suitable for your walls before installing, as different wall materials may require different types of anchors.

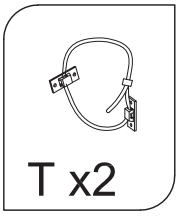

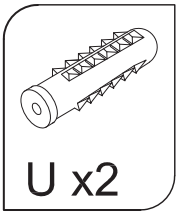

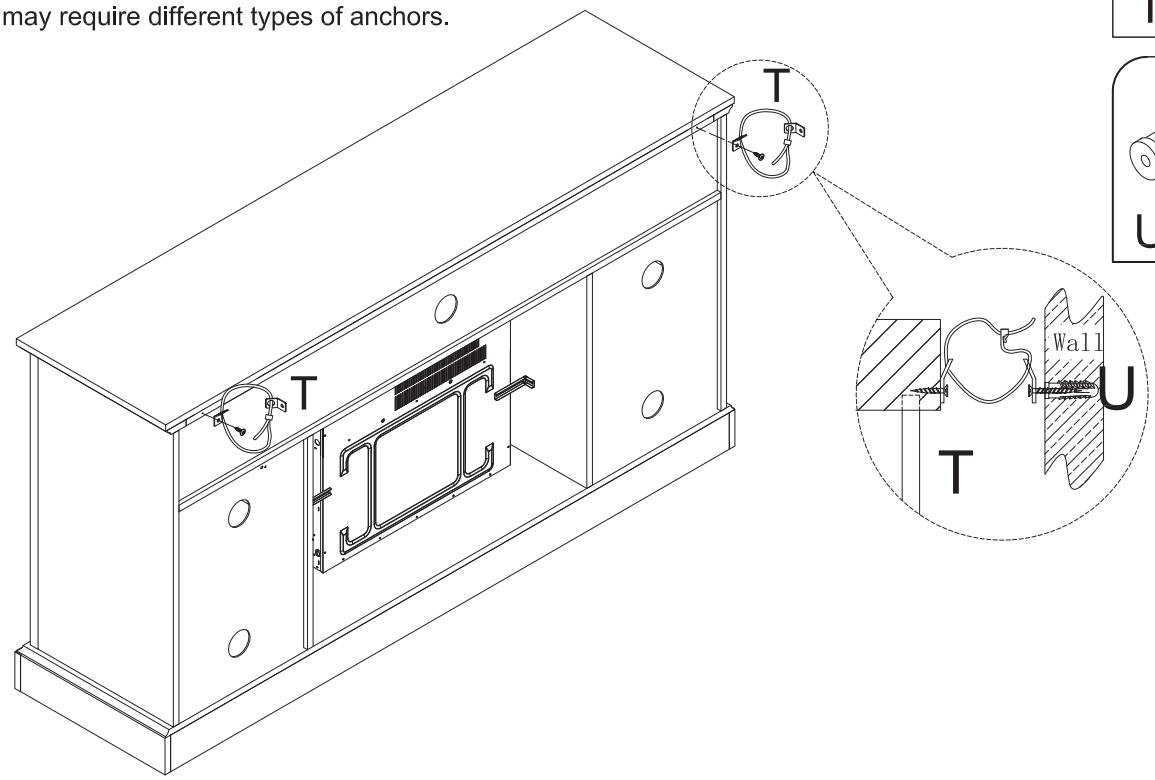

CAUTION: This unit is intended for use only with the products and maximum weights indicated. Use with other products or products heavier than the maximum weights indicated may result in instability causing possible injury.

Note: Flat Panel TVs with base support should be placed squarely in the center of the stand with no overhang on any side.

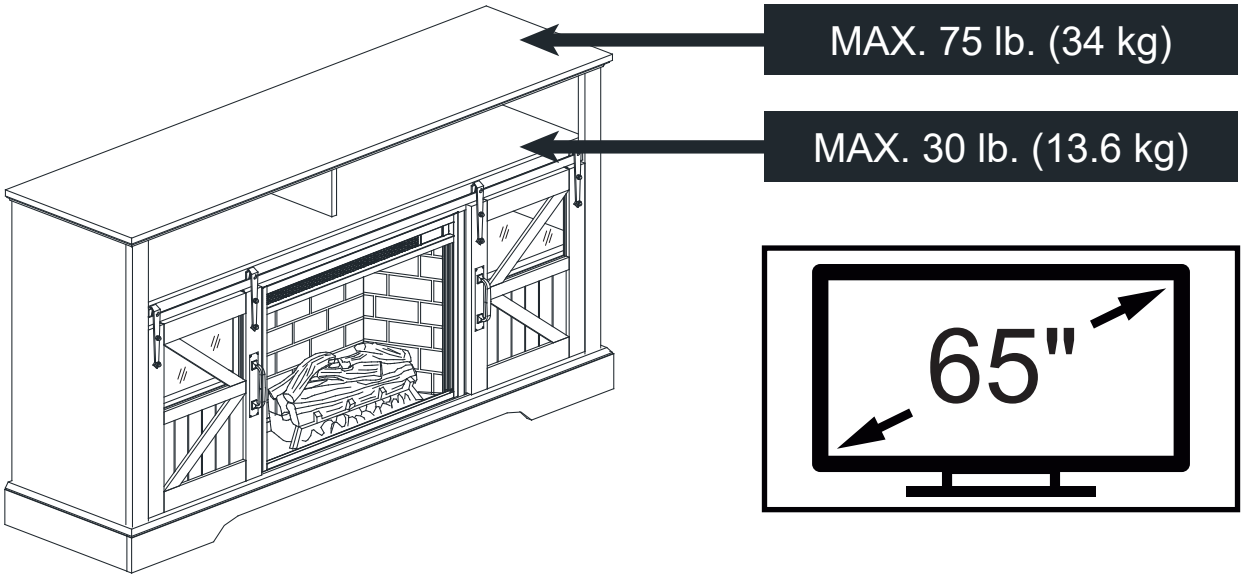

YOU'RE FINISHED!