6

D-11

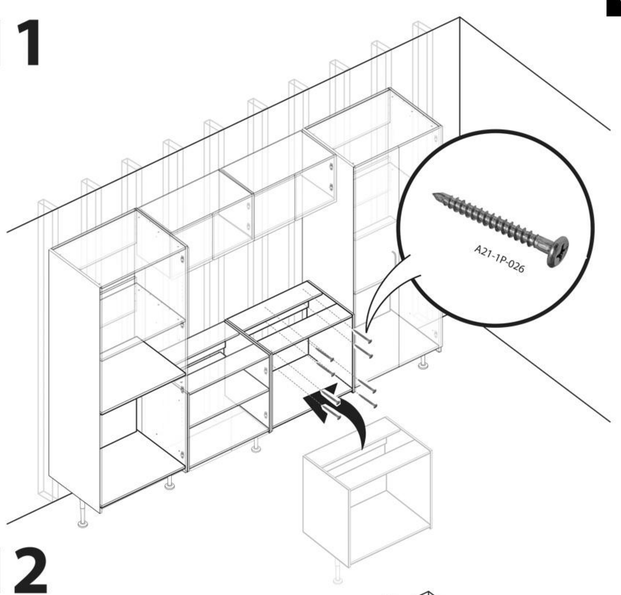

D-12

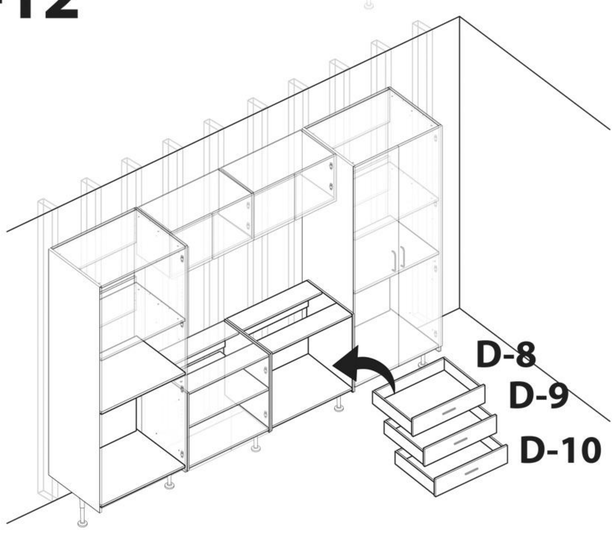

7

D-13

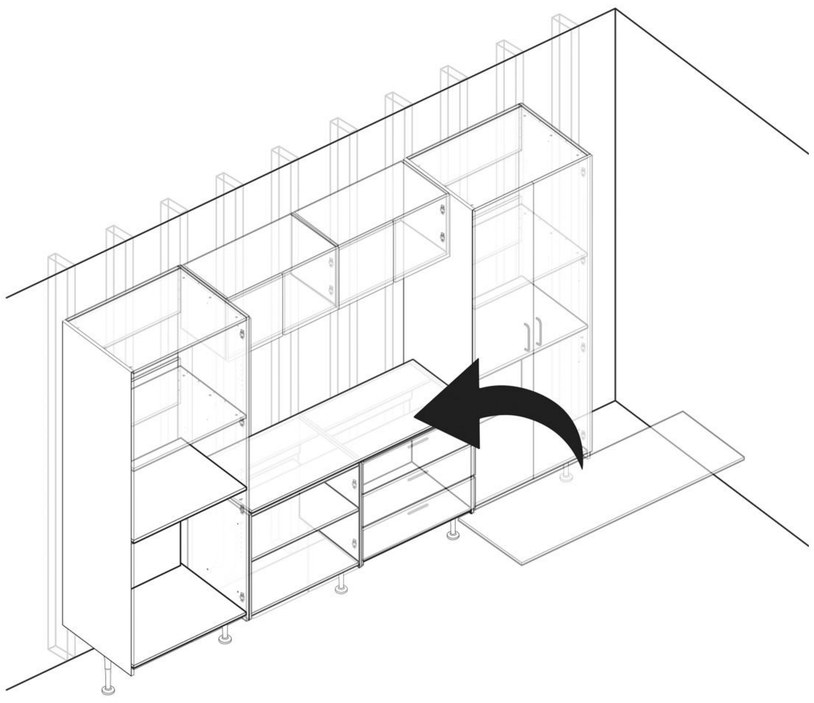

8

Connecting

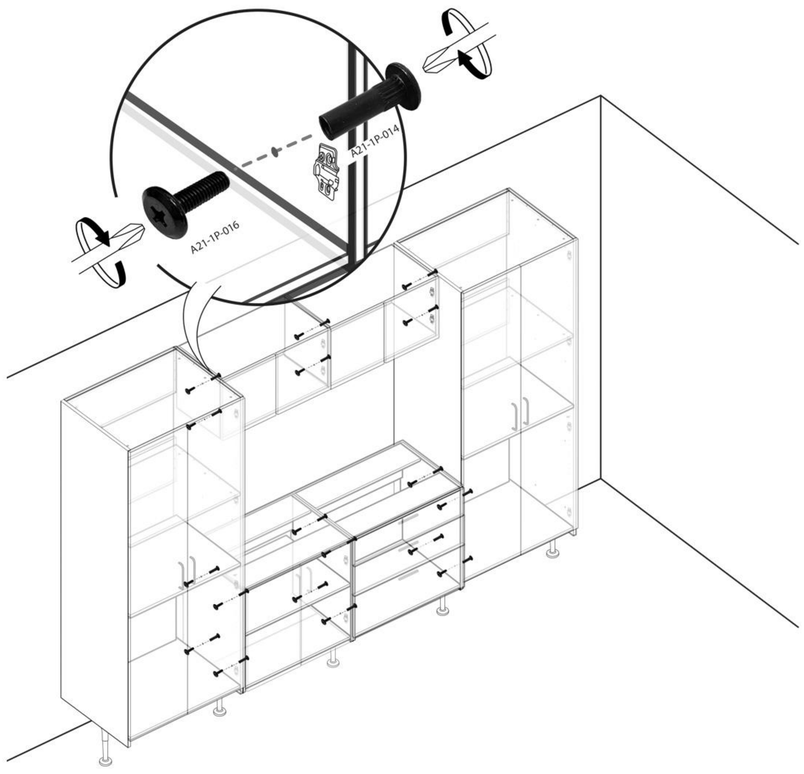

9

A-15

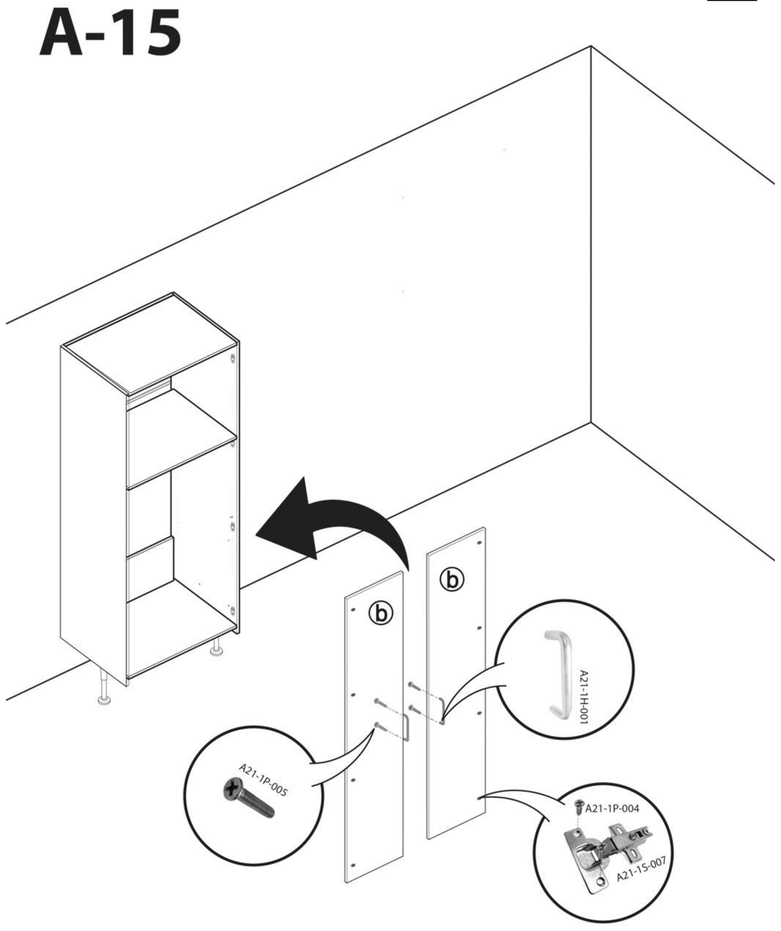
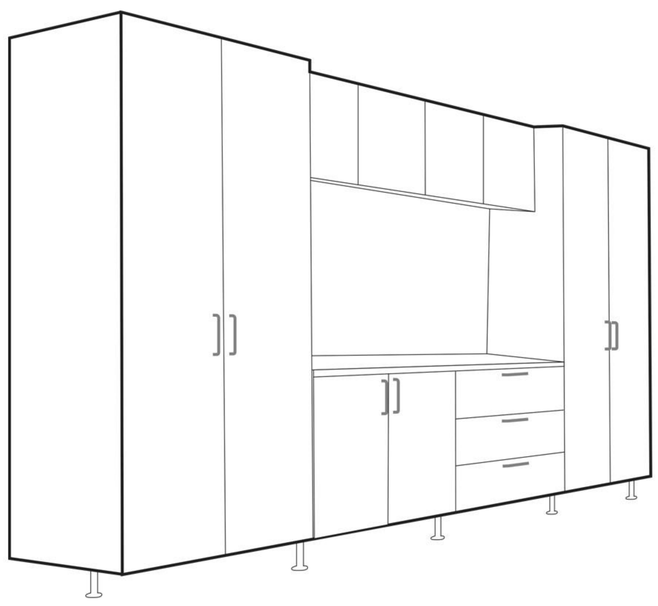
10