AX3	BX1	CX1
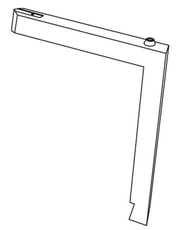	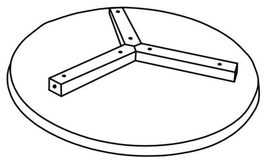	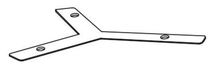

H5X3	T1X1	H2X3	H4X3	Extra Hardware
5x15	4mm	5x50	6mm	H1-2 pc H2-2 pc
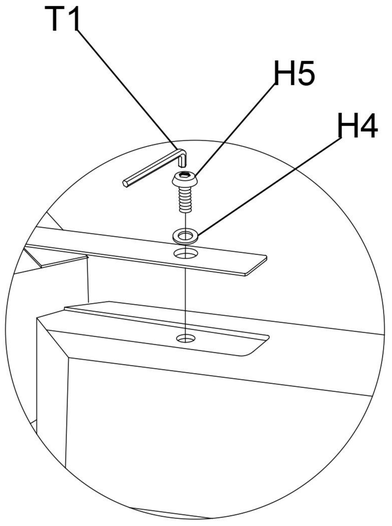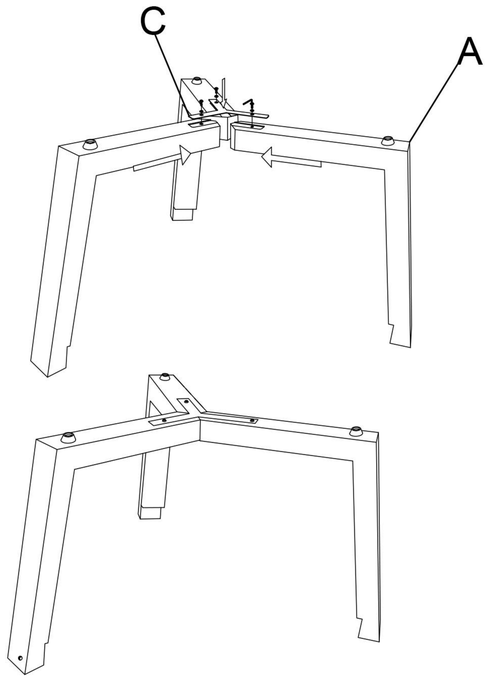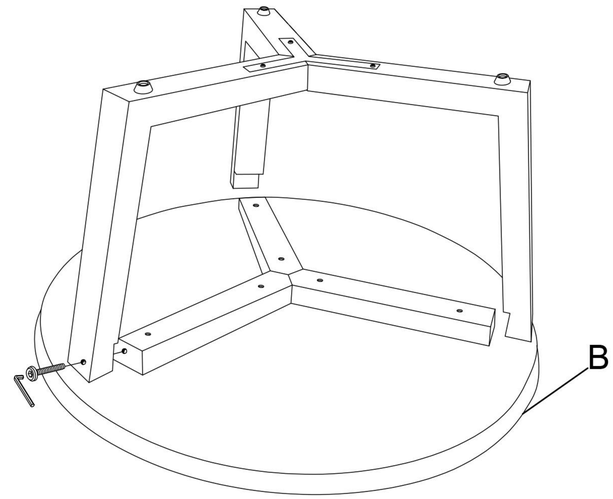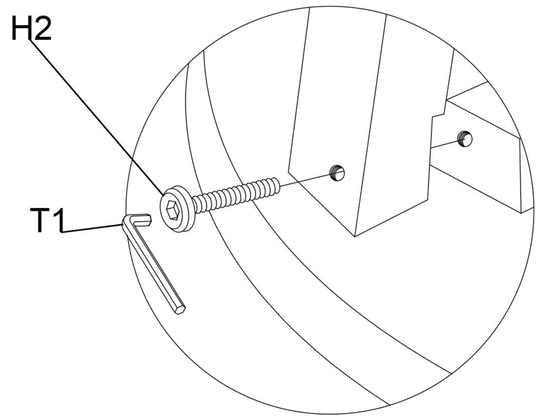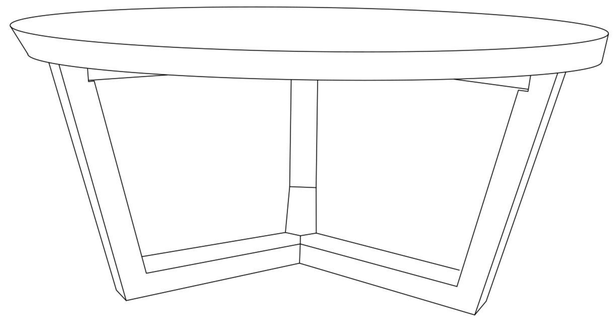
Note: 1. Please do not tight any bolt unless all bolts are fixed at their respective places.
2. After fixing the bolts tighten them simultaneously.
3. Matching Parts Bolt (example AtoA)
4. Two person assembly required.