DINING CHAIR

Assembly Instructions

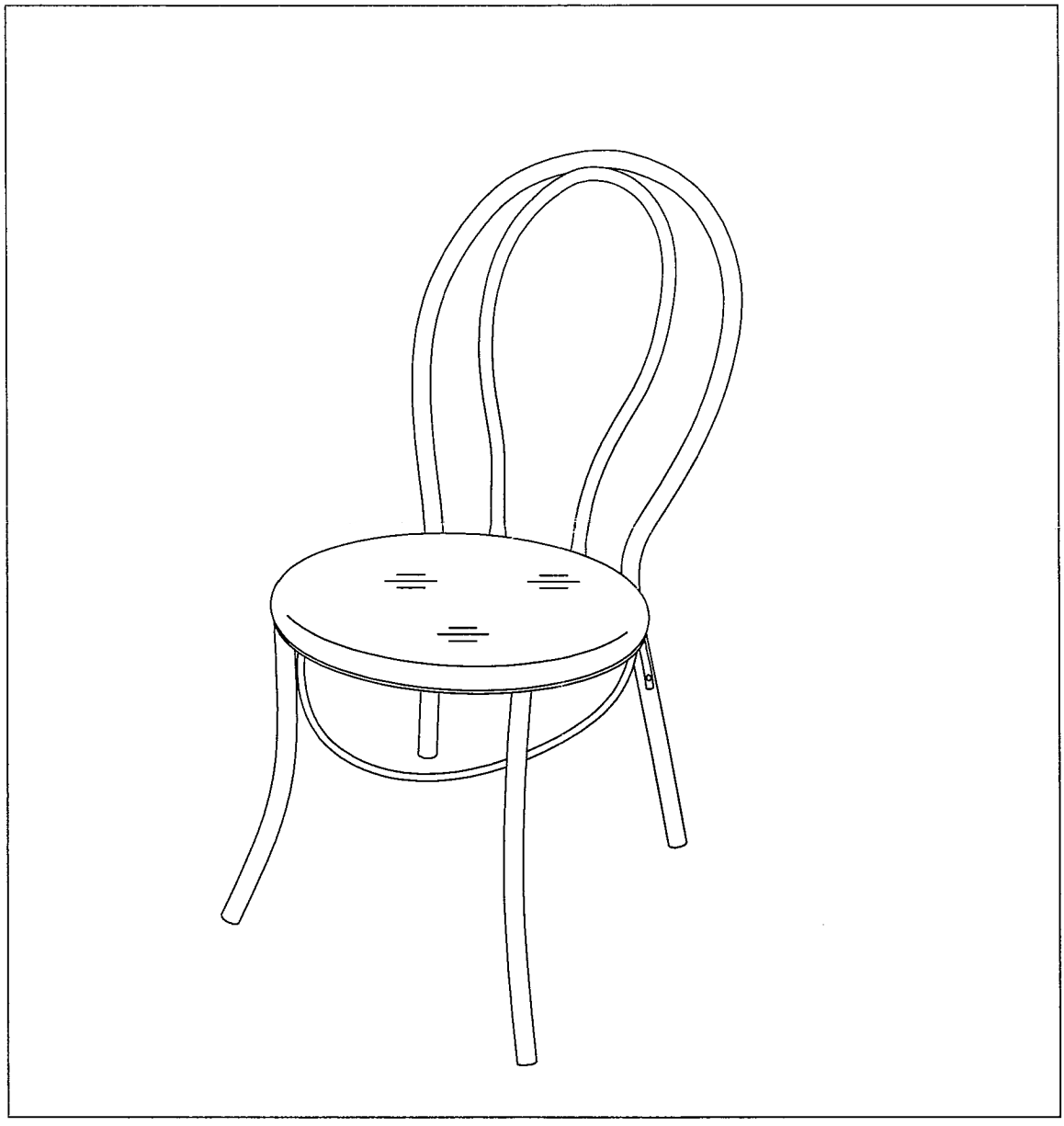

Parts List

Lable	Picture	Qty
A	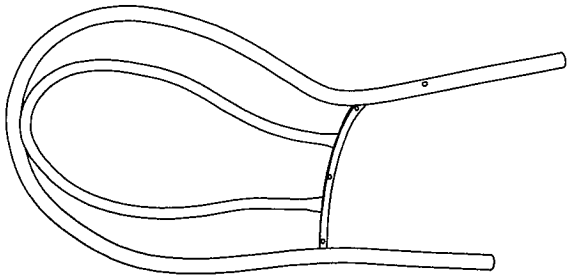	1
B	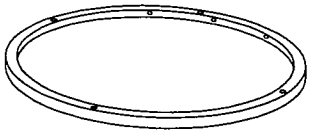	1
C	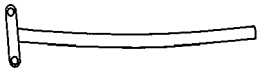	2
D	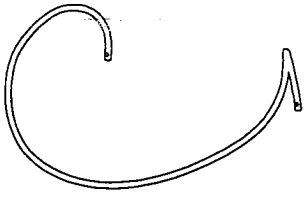	1
E	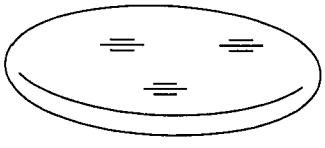	1
T - 1	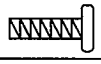 (M6X15)	4
T - 2	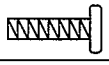 (M6X20)	3
T - 3	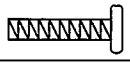 (M6X25)	6
T - 4	 (M4X30)	4
T - 5		1

Assembly Steps

ATTENTION:

DO NOT COMPLETELY TIGHTEN ANY SCREWS UNTIL ALL PARTS ARE IN PLACE

Step 1

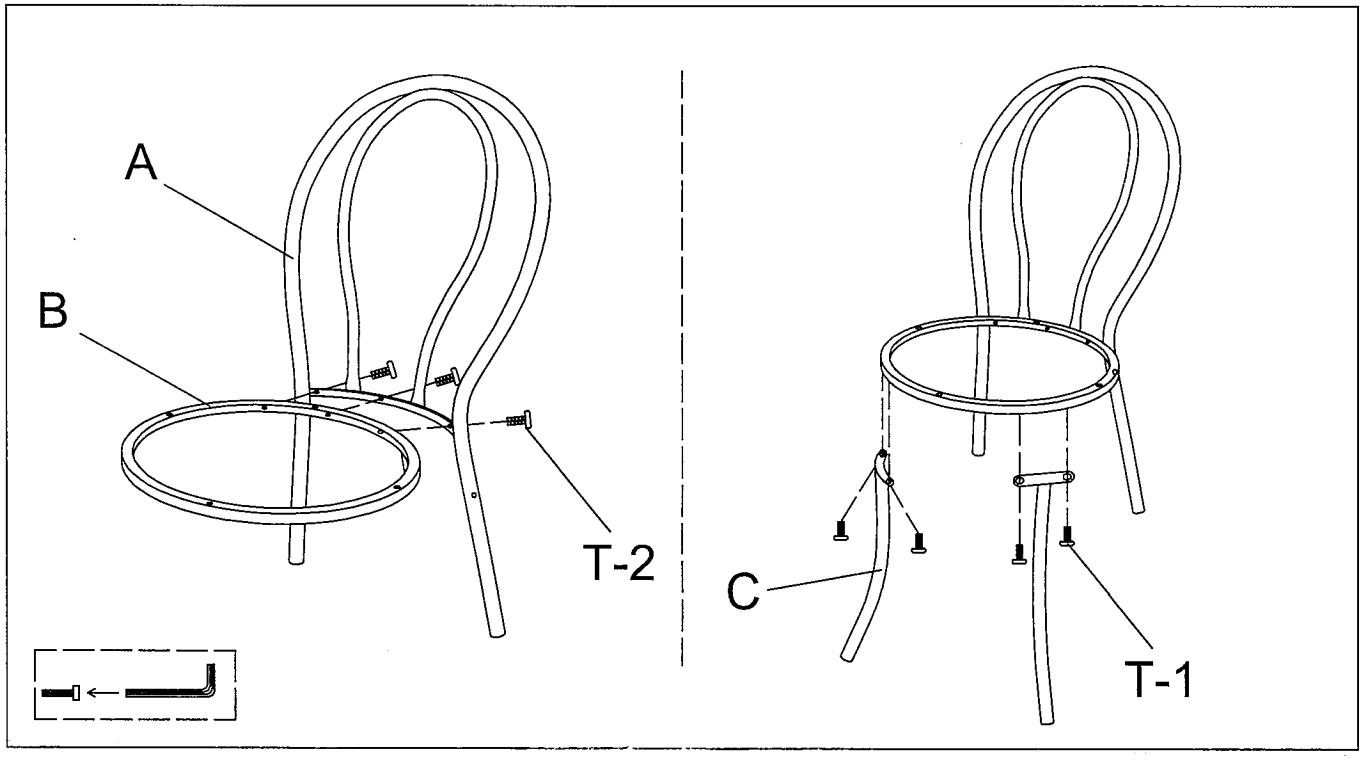

Step 2

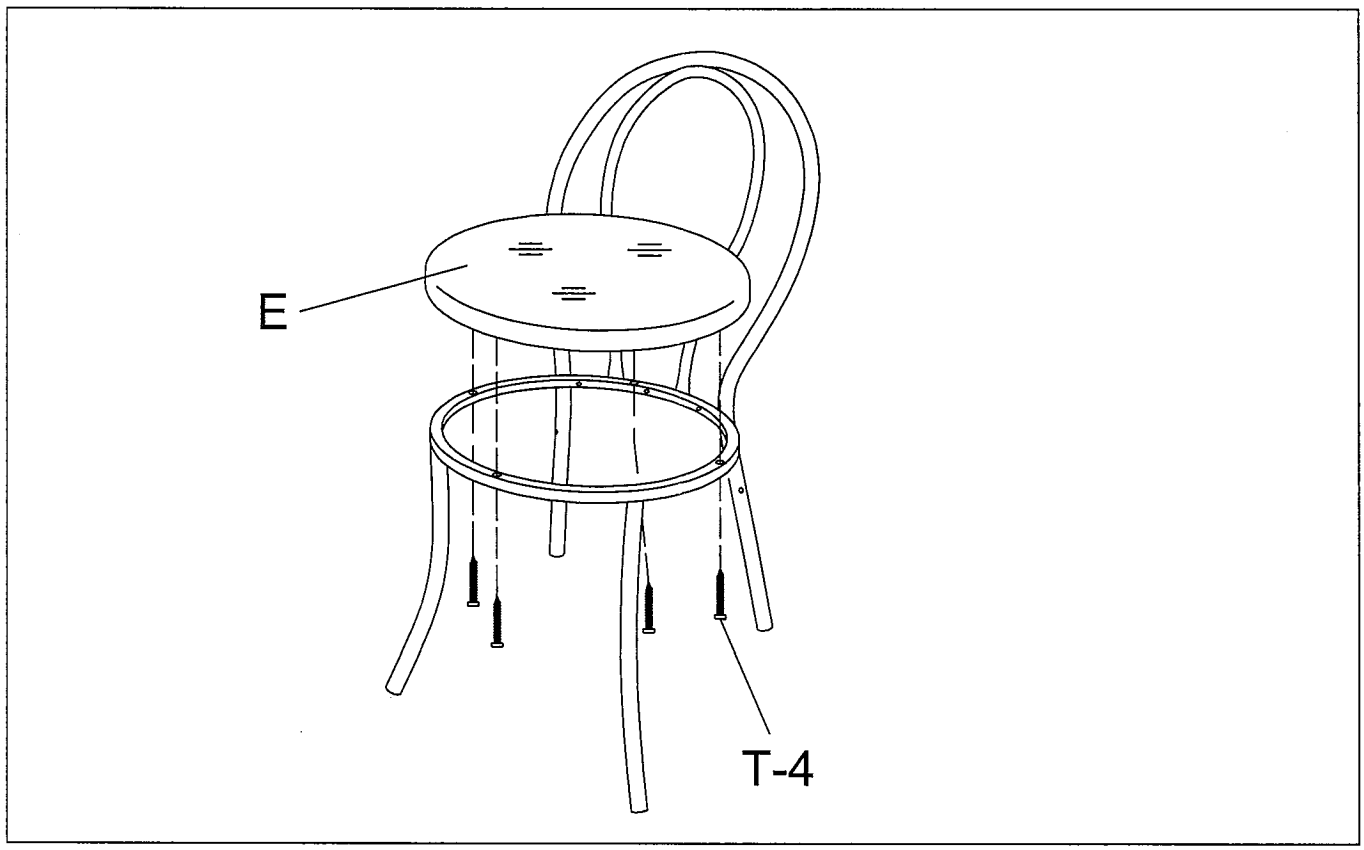

Step 3

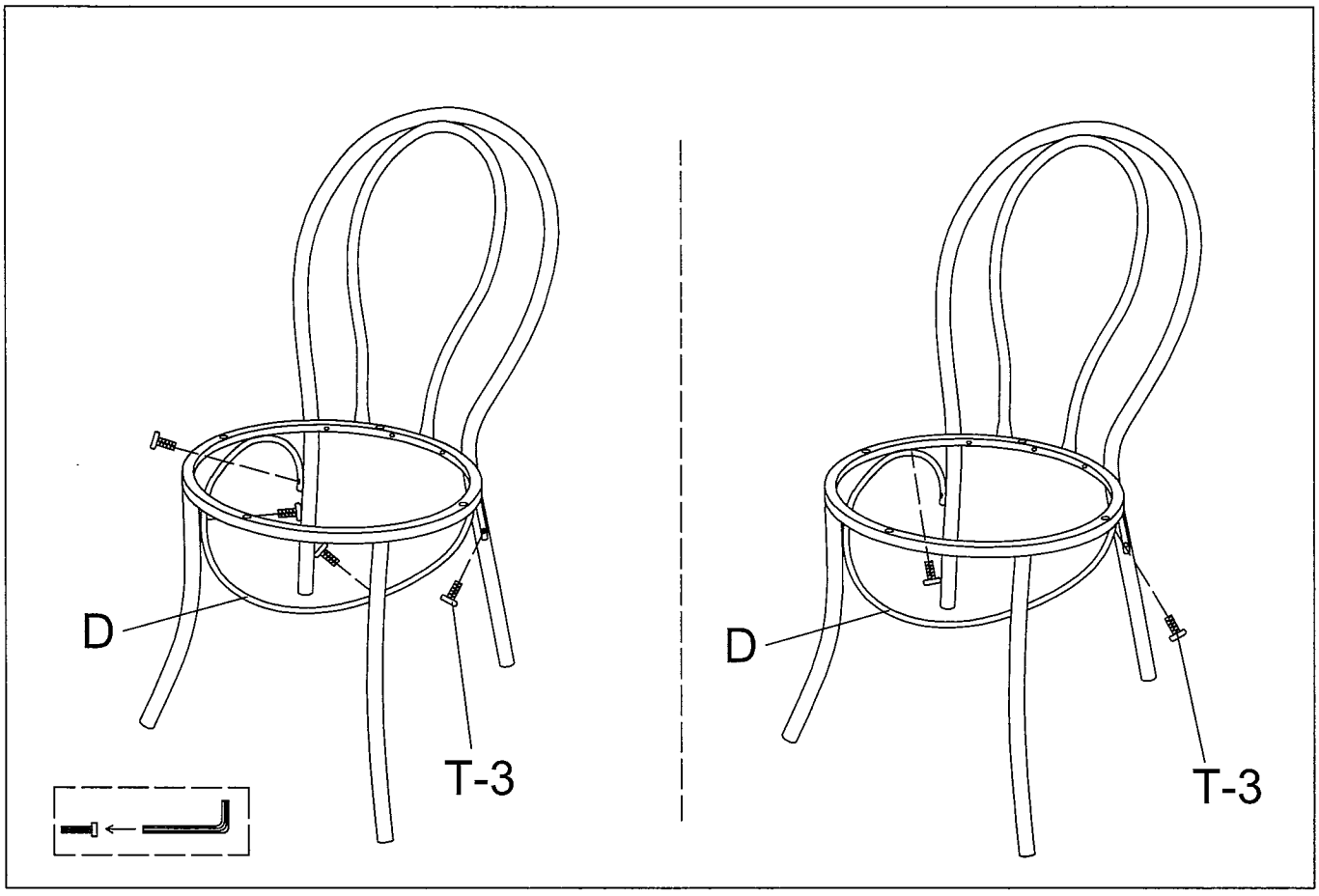

Step 4

