Bookcases

Product ID. 7L3GZ

Scan for Support
support@garvee.com

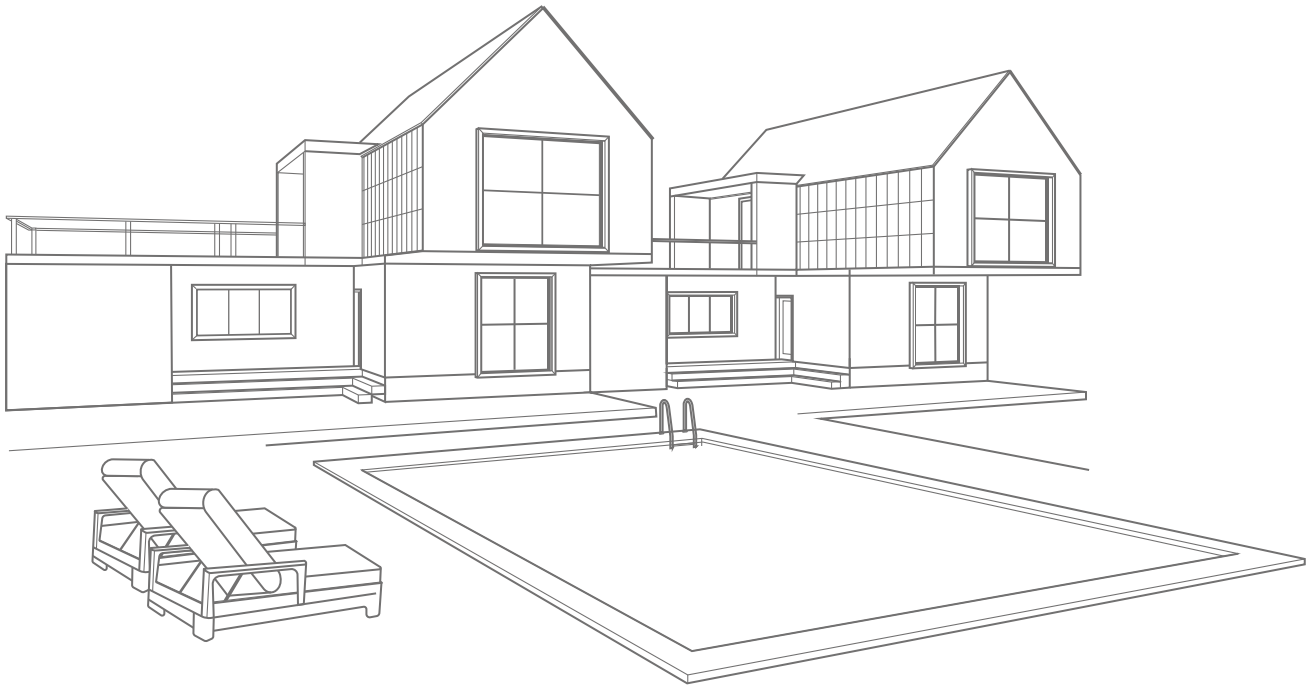

Distributed by
GARVEE.com

V2605196ZMF

SKU：PHK_3BFMAGS3
PHK_3BFMH4HP
PHK_3BFMEUW V

Assembly Instructions

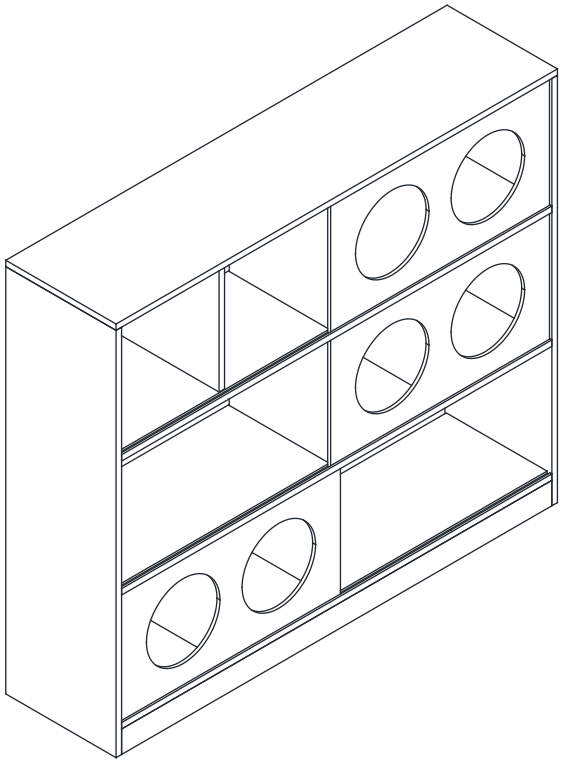

Team
Assembhy
Recommended

Troubleshooting:

Missing/Wrong /Broken parts and installation issues

↓

Send an email with photos of the issue, your order number, and a screenshot of your order details to:
support@garvee.com

↓

We will respond within 24 hours

↓

Issue resolved

Tips!

WARNING
Children have died from furniture tip-over.To reduce the risk of furniture tip-over:
- ALWAYS anchor the anti-tip device to the wall. Installation is MANDATORY.
- NEVER allow children to stand, climb or hang on drawers, doors, or shelves.
- NEVER open more than one drawer at a time.
- Place the heaviest items in the lowest drawers.

Tools required

A Phillips head screwdriver is required for the assembly of this product. (not included)
An electric tool should not be used to assemble this product.

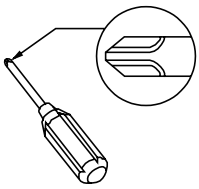

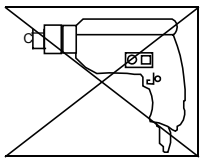

Two people are needed



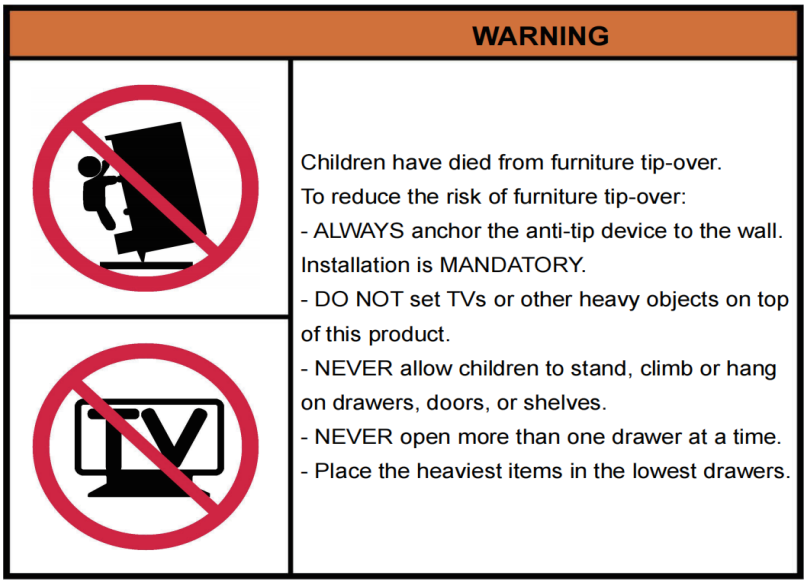

IMPORTANT SAFETY INFORMATION

- Please carefully read the following instructions and caution warnings before assembling the product.
- Following this guide will ensure that you install, use and maintain the product properly.
- Please keep this installation and user manual/instructions for future reference in case you need todisassemble the product.
- Never allow children to climb onto the product. Ensure that you have special safety measureswhen children are around on their own.
- Be sure to check that all parts of the product are intact after you open the package.
- Do not assemble if you notice serious damage such as cracks or bends.
- During installation, please use work gloves for hand safety.
- Please assemble the unit on carpeted floor or the flat cardboard box to avoid scratching the.
- To assemble, please use the complimentary installation tools (Phillips screwdriver). Pay moreattention to the direction of components at each step.
- It is recommended that two people work together to assemble the product.

RETURN POLICY

- Please contact us directly within 30 days after receiving.
- Ensure the product is in a good condition with the original bopurchase, manuals, and accessories attached.

COMPONENTS ID Nr.

Please verify that you have all the parts listed below

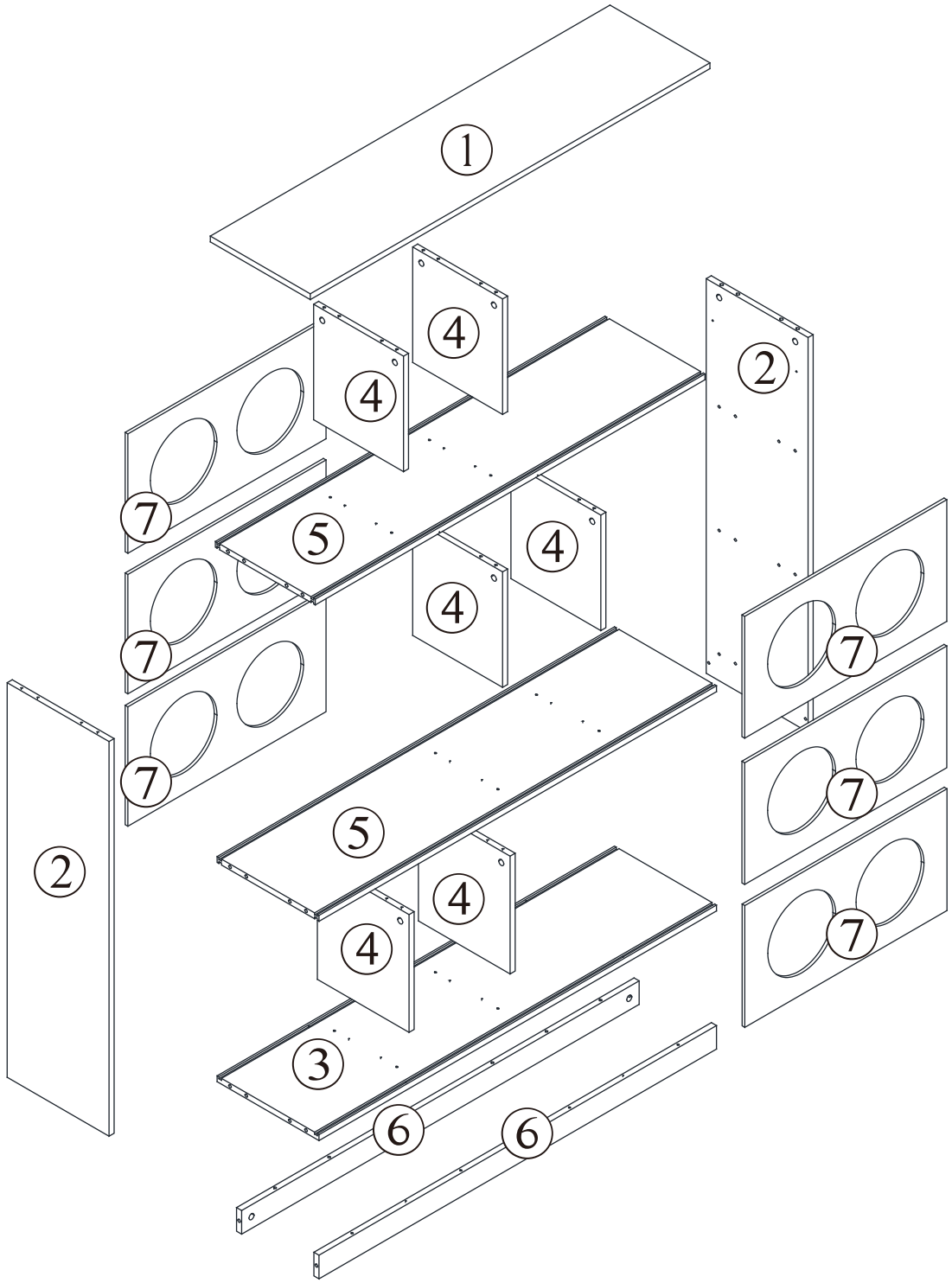

Note: Do not fully tighten all screws until all components are properly aligned during installation.

HARDWARE LIST

Components:

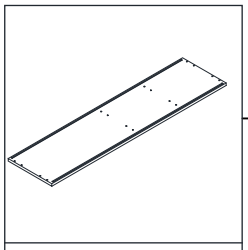
① x1

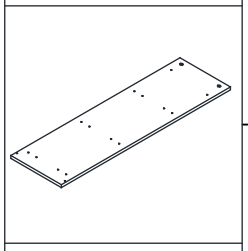
② x2

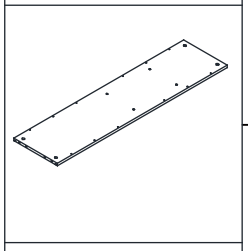
③ x1

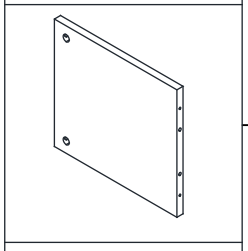
④ x6

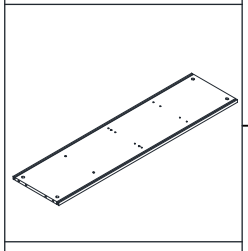
⑤ x2

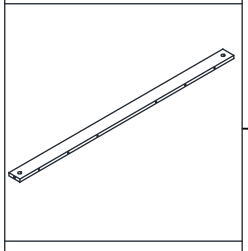
⑥ x2

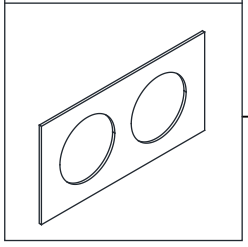
⑦ x6

HARDWARE LIST

Screws & Tools:

A		∅6x35mm	32+3pcs
B		∅15x9.5mm	32+3pcs
C		∅6x30mm	44+4pcs
D		∅ 4x35mm	8pcs
E		∅ 4x35mm	14+1pcs
F	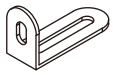		2pcs
G		∅4x12mm	2pcs
H			2pcs

Before assembly, check all components and screws.
If any parts are missing, do NOT proceed with installation. Please contac t us to request the missing items. For inquiries, send an email to support@garvee.com. We will resend the missing parts within 24 hours.

PRODUCT ASSEMBLY

Step 1

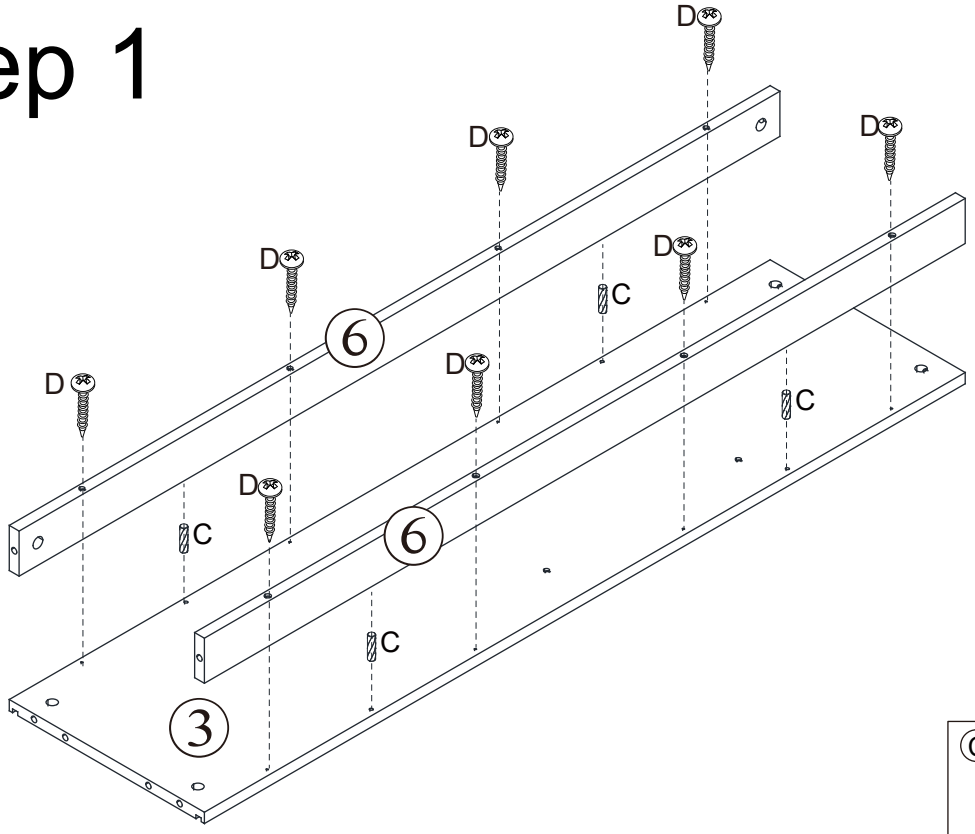

Ⓒ x4	Ⓓ x8
	

Step 2

x2

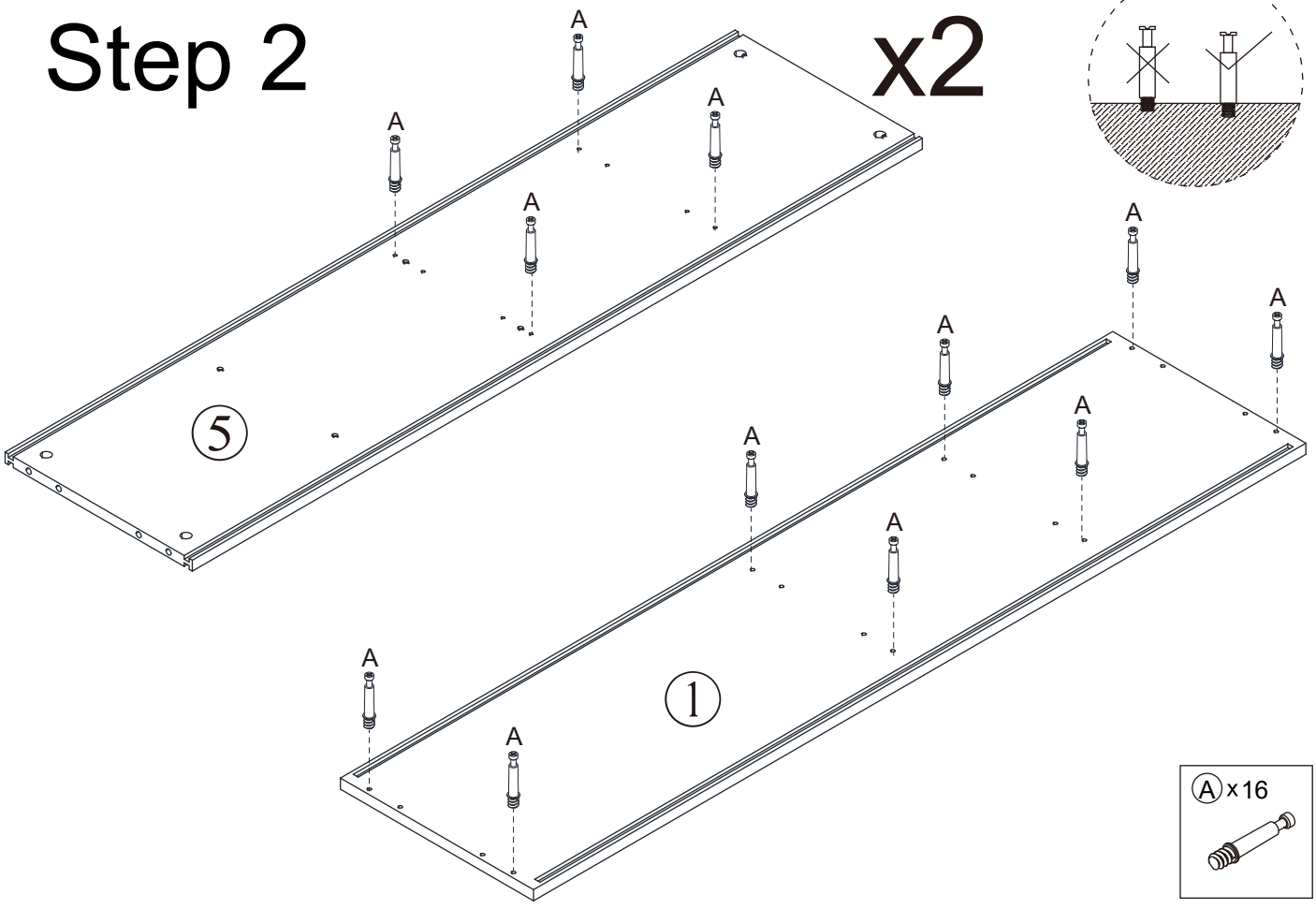

Ⓐ x16

Step 3

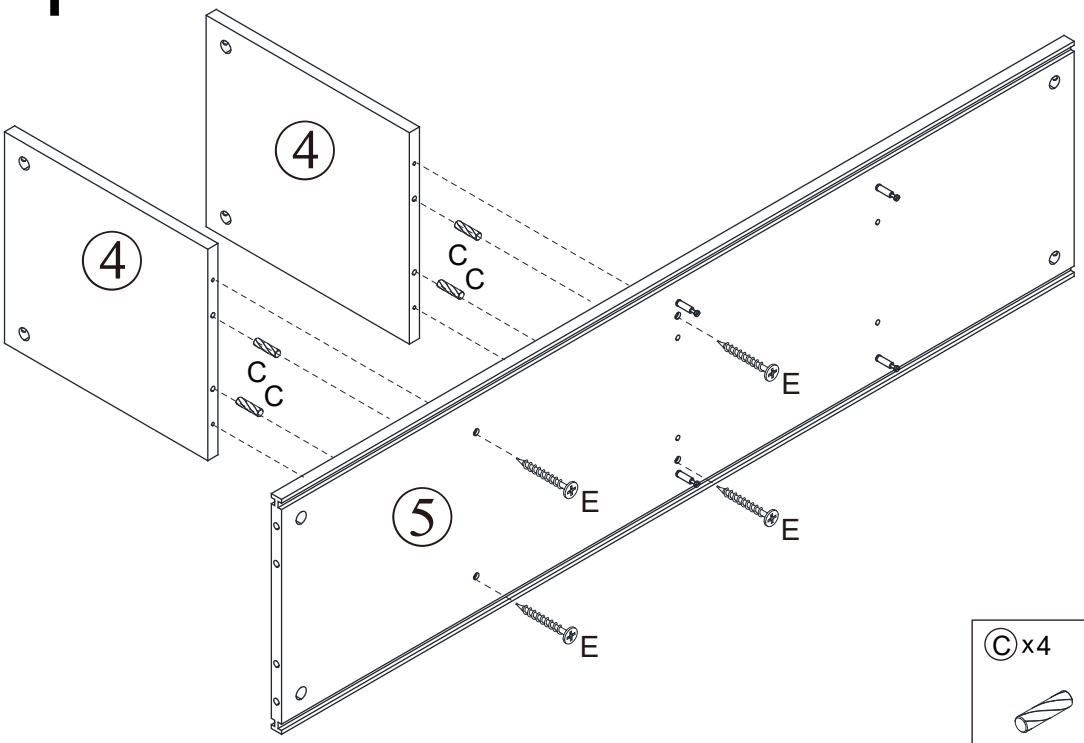

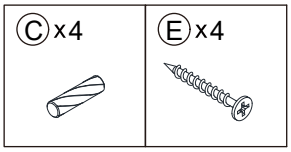

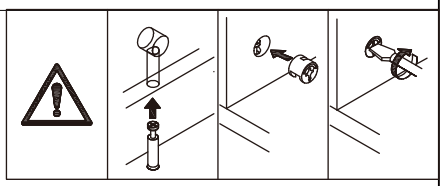

Step 4

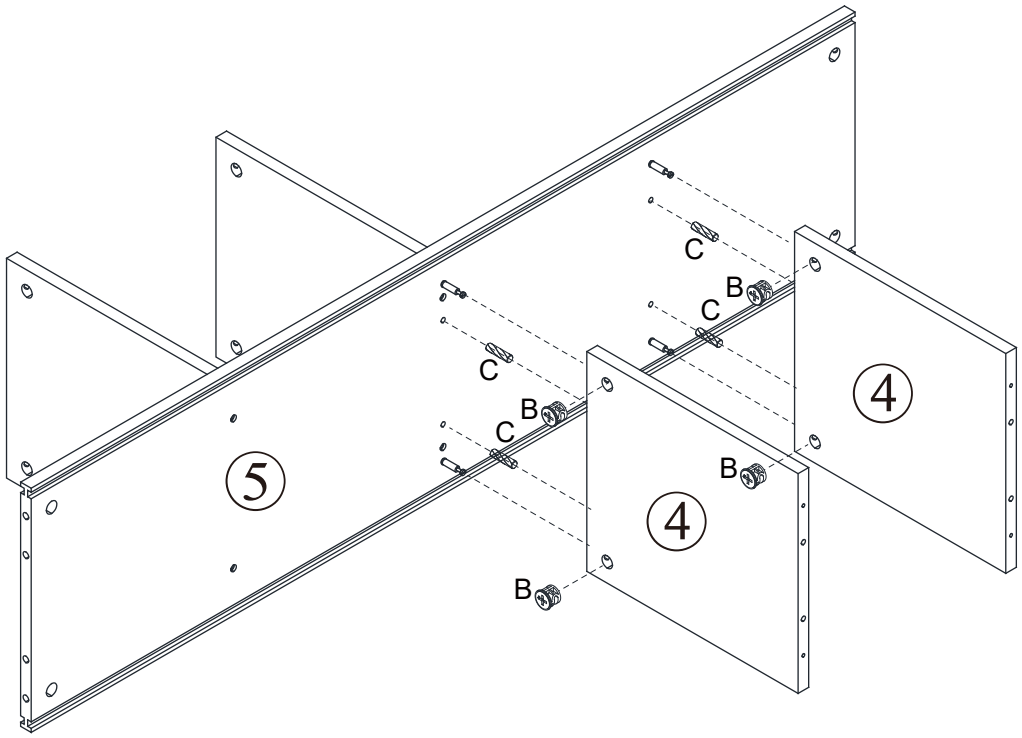

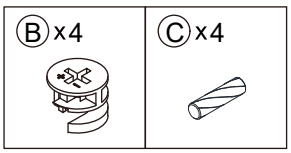

Step 5

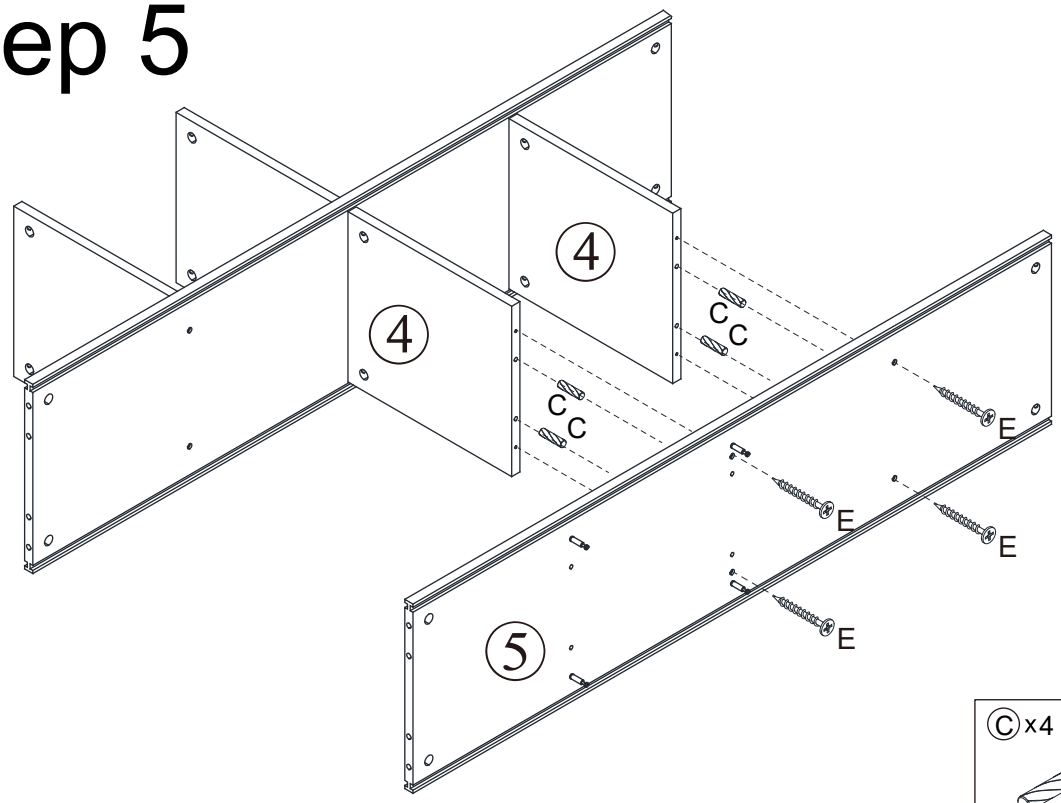

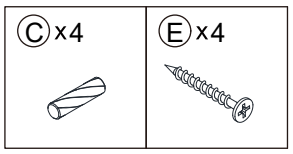

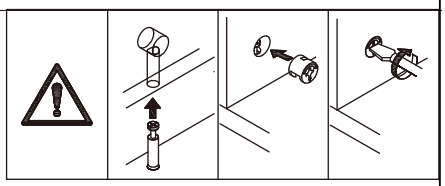

Step 6

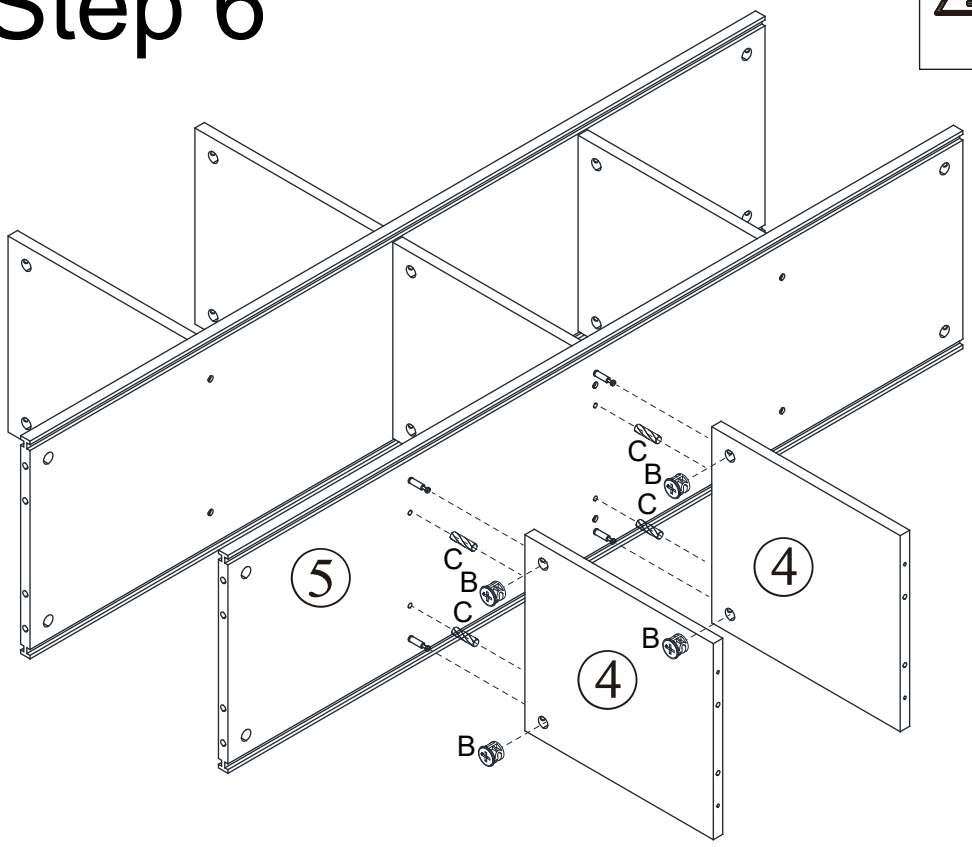

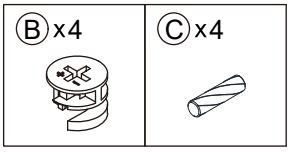

Step 7

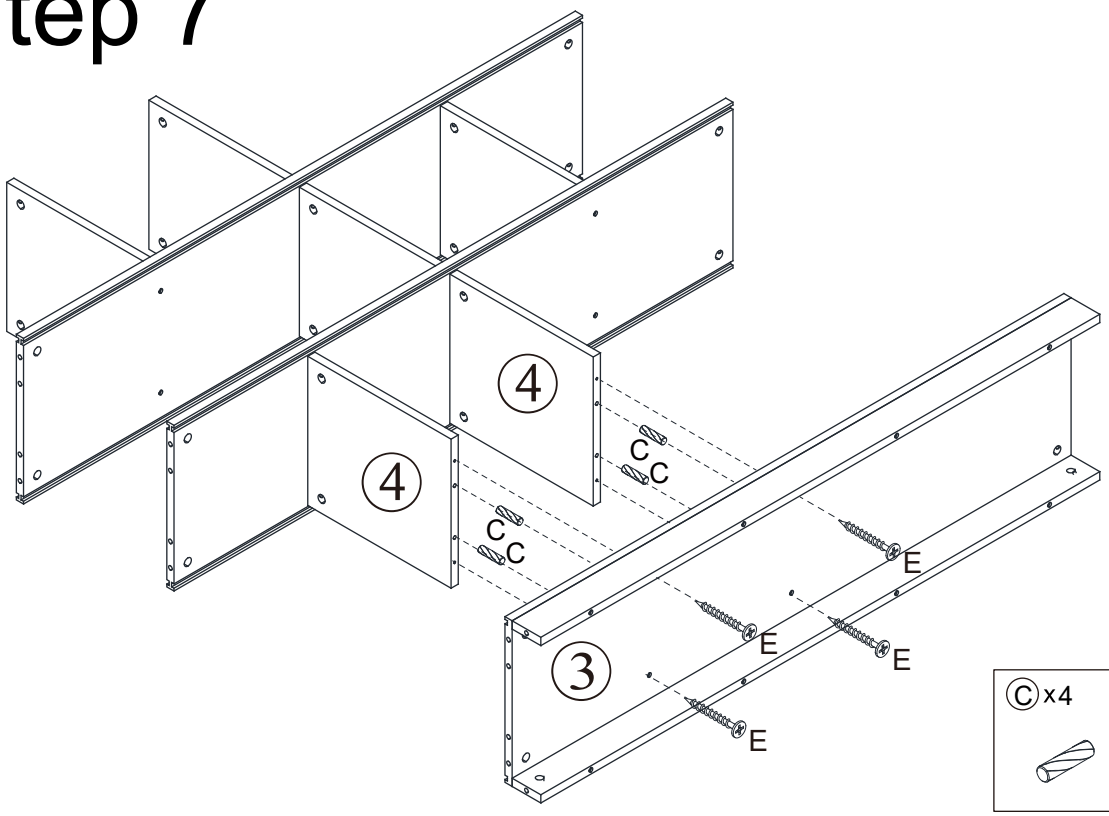

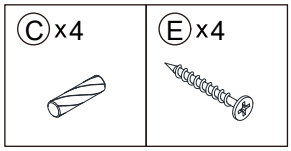

Step 8

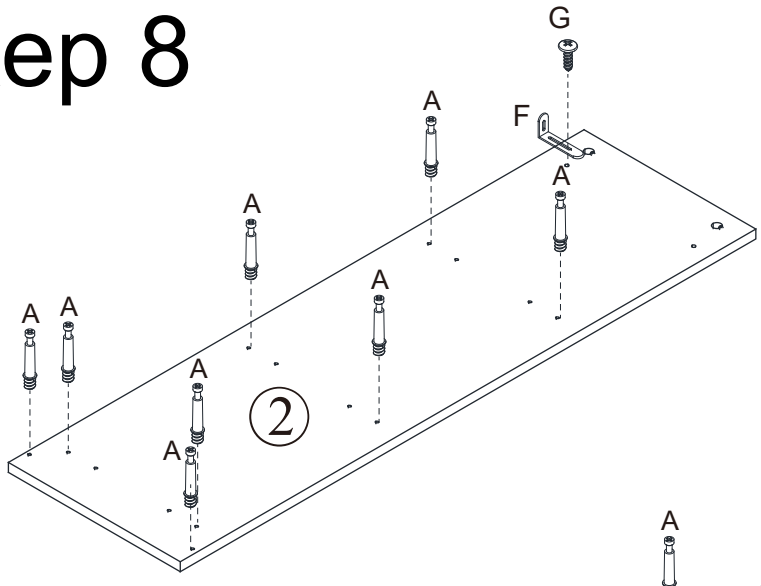

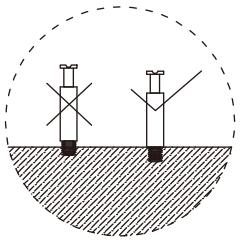

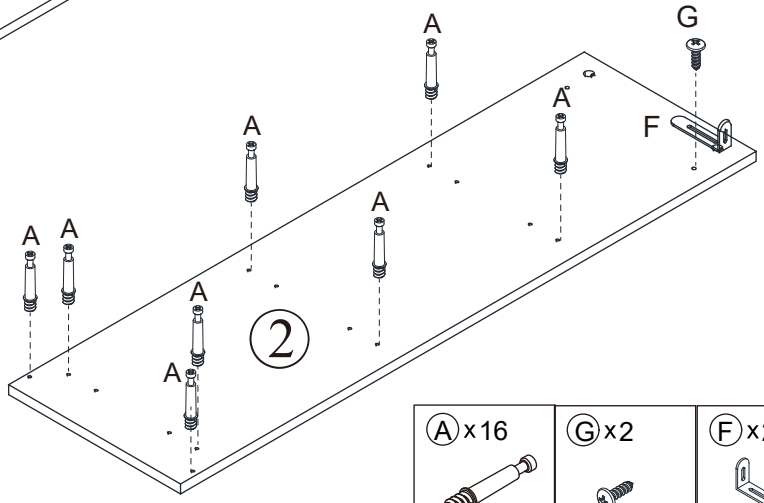

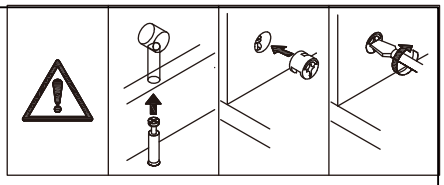

Step 9

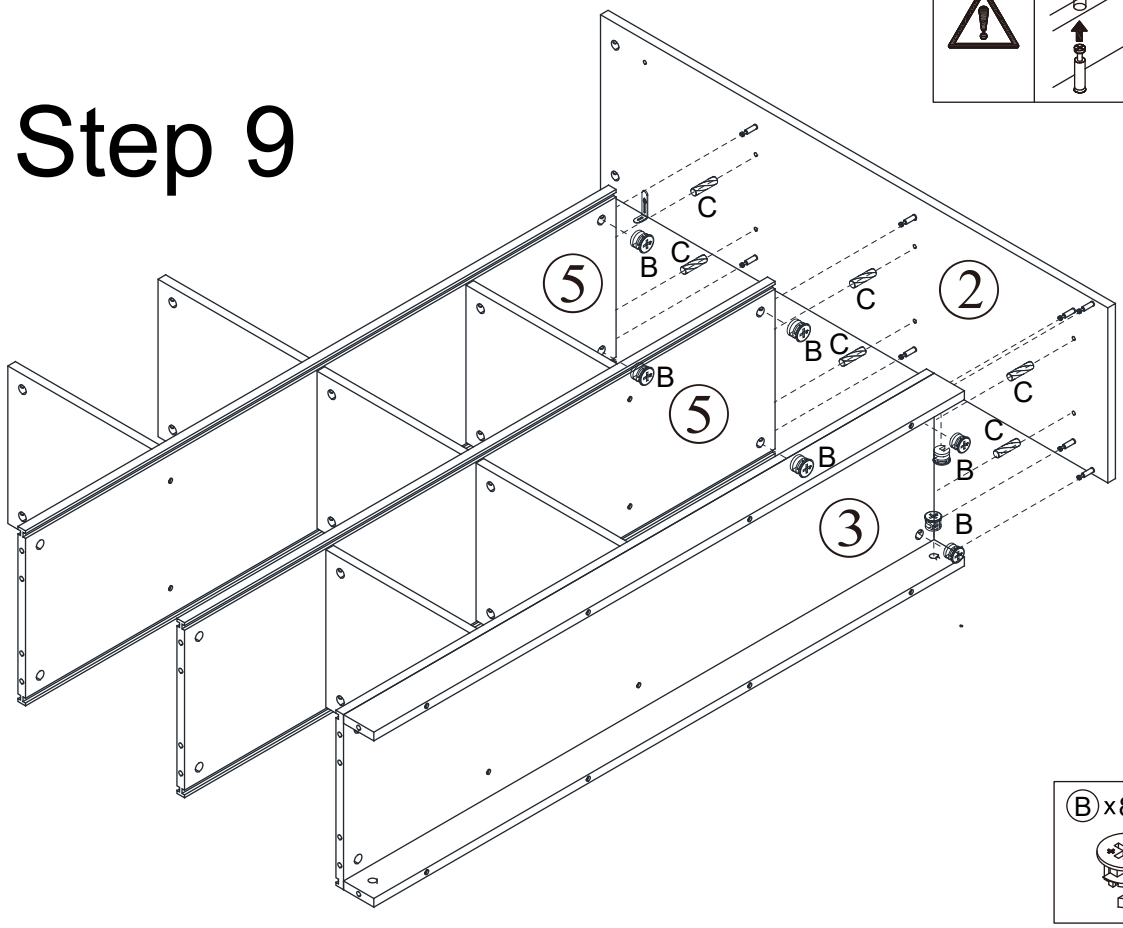

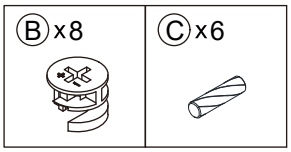

Step 10

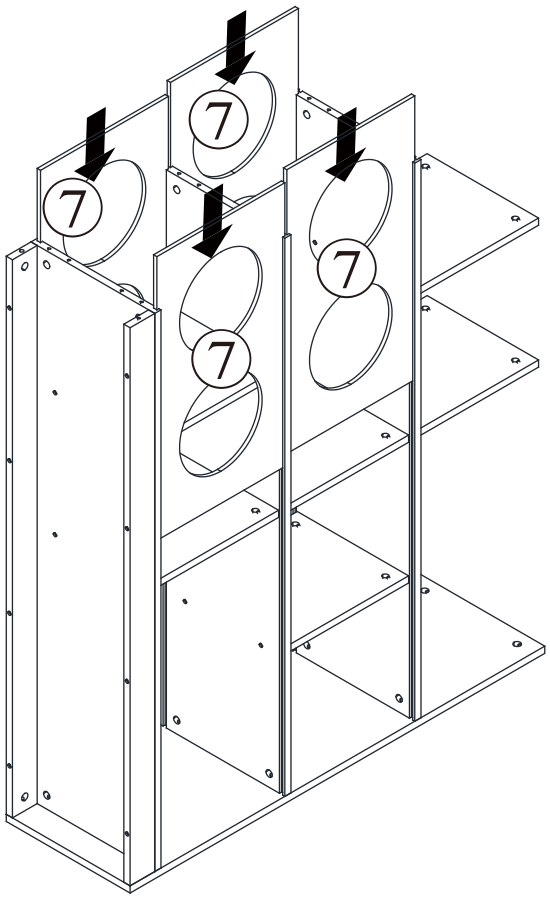

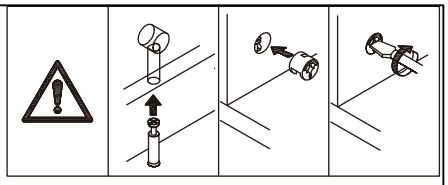

Step 11

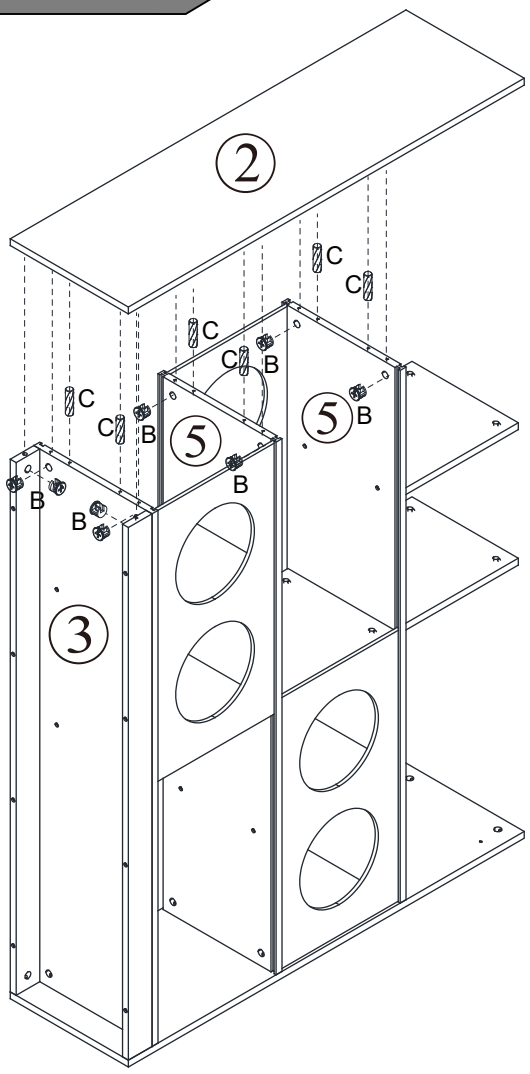

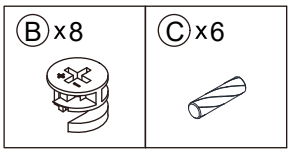

Step 12

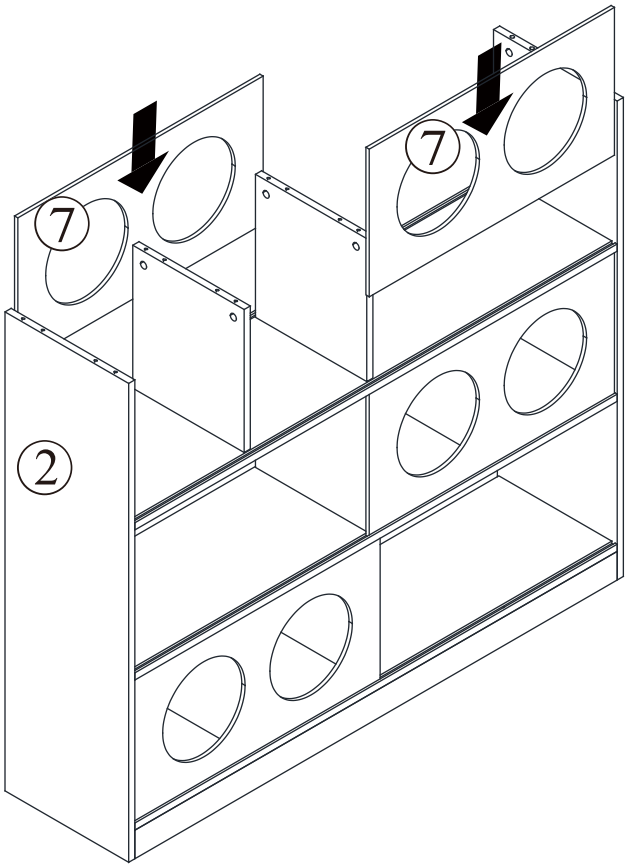

PRODUCT ASSEMBLY

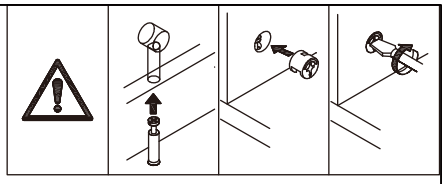

Step 13

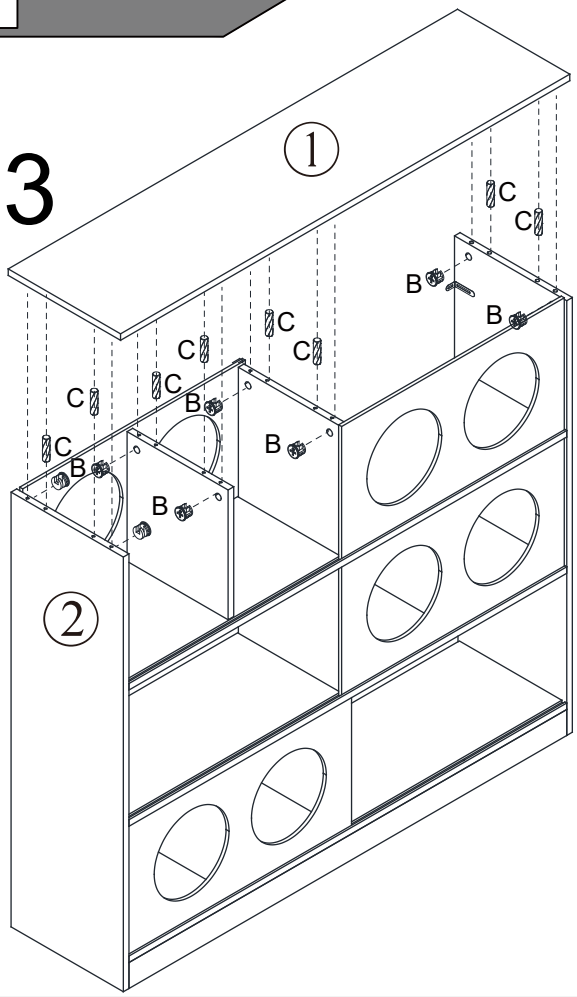

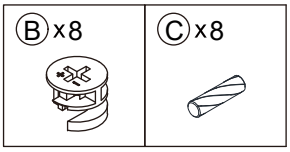

Step 14

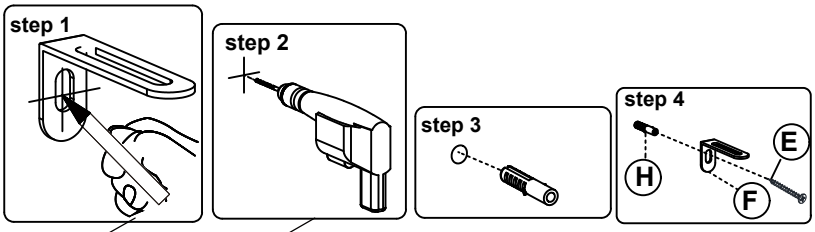

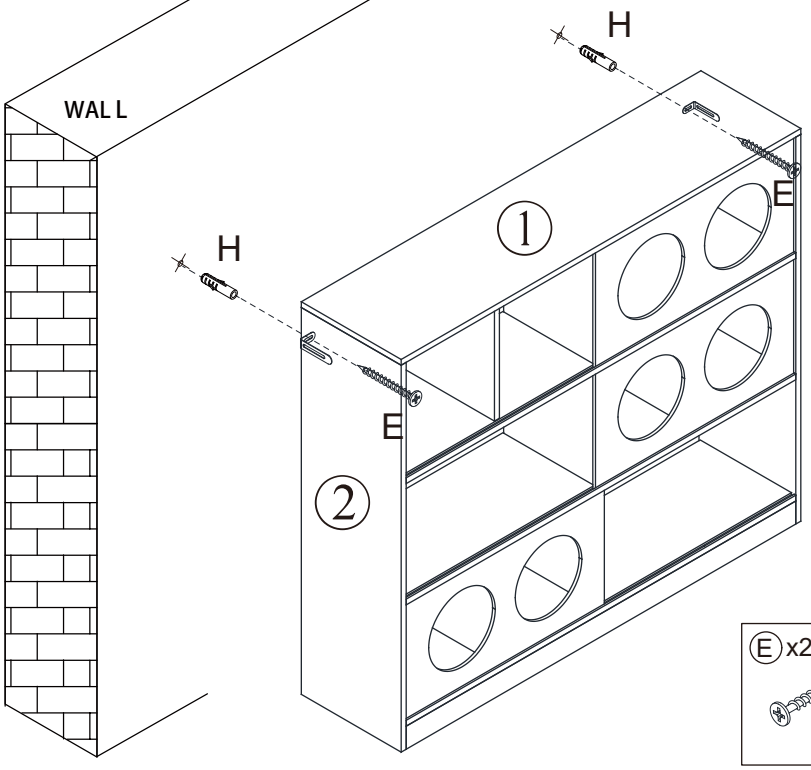

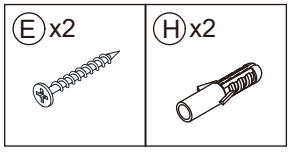

CONTACT US

Dear customer, thank you for purchasing Garvee products! We are proud to presentour customers with high quality products!



If you have any product quality or use problems, please contact our customer service by email, we will ensure your satisfaction.



If you are satisfied with our products, please share your amazing experience with us and other customers! It would be our honor to hear from you!



Customer Service Team: support@garvee.com

GARVEE

support@garvee.com