Bookcase

Assembly Instructions - Please keep properly for future reference.

If you find any missing boxes, damaged parts, or accessory shortages, please contact the customer service team of your purchasing channel immediately. We will resolve the issue as quickly as possible.

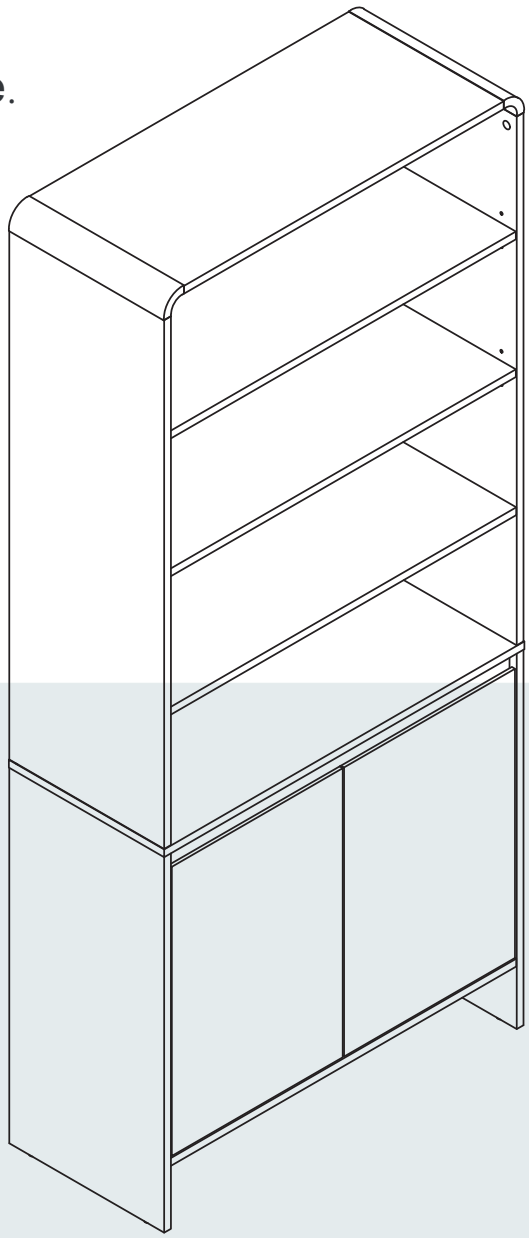

CONTACT US

• In order to receive assistance more quickly, please provide

THE FOLLOWING INFORMATION:

- Order number
- Purchase platform
- Purchase date
- Detailed description of the issue along with photos (if applicable)

Important – Please read these instructions carefully before starting the installation.

EN

Before Assembly

Thank you for choosing our product!
To ensure a smooth installation process, please read this guide carefully to familiarize yourself with the required tools, materials, and installation steps.
Follow the relevant sections to avoid any damage caused by improper installation, and make sure to review all operation and safety guidelines for correct installation procedures.

Packaging Notice:

If you find any missing boxes, damaged parts, or accessory shortages, please contact the customer service team of your purchasing channel immediately. We will resolve the issue as quickly as possible.

Safety and Care Advice

Important :

Please read these instructions fully before starting assembly.

- Check you have all the components and tools listed on the following pages.
- Remove all fittings from the plastic bags and separate them into their groups.
- Keep children and animals away from the work area, small parts could choke if swallowed.
- Make sure you have enough space to lay out the parts before starting.
- During assembly do not stand or put weight on the product, this could cause damage.
- Assemble the item as close to its final position (in the same room) as possible.
- Assemble on a soft level surface to avoid damaging the unit or your floor.
- Parts of the assembly will be easier with 2 people.



- To reduce the likelihood of damaging your product please ensure that your power drill is set on a low torque setting.

Care and maintenance

- Only clean using a damp cloth and mild detergent, do not use bleach or abrasive cleaners.
- From time to time check that there are no loose screws on this unit.
- This product should not be discarded with household waste. Take to your local authority waste disposal center.

Handy Hints

- Assemble all parts and bolts loosely during assembly, only once the product is complete should you fully tighten the bolts.
- Regularly check and ensure that all bolts and fittings are tightened properly.

Warning

In order to help prevent overturning, please follow these instructions.

- Use the anti-tip strap or wall fixing method provided (if applicable).
- Do not allow children to climb or hang on the furniture.
- Do not place heavy items in the top drawers.
- Do not place heavy items on top of the furniture, unless the furniture has been designed for this purpose.
- Please note that only the anti-tip strap is provided. You will need to provide wall plugs and screws applicable for your wall type.

Customer Service Guide

Thank you for choosing our product! We are committed to providing you with excellent service. If you find any missing parts, damaged packaging, or product damage after receiving all packages, please follow the steps below to quickly contact our customer service team. We will do our best to resolve your issue.

1.Missing Parts

Verify Parts:

1. Refer to the “Parts List” in the manual to verify the name, specifications, and quantity of the missing parts.
2. Take a clear photo of the parts list and mark the missing parts with detail information, e.g., “Missing 5 pieces of M6×30mm screws.”

Contact Us:

By Email:

Send an email with the subject line “Missing Parts Issue.” Include the following in the email:

- A description of the missing parts and a photo of the parts list
- Order details (order number, purchase platform, purchase date)

2. Product or Packaging Damage

If it affects normal use:

Steps:

1. Take clear photos or videos showing the damaged parts and the extent of the damage (multi-angle shots are recommended).
2. Email the photos/videos along with order details with the subject line “Product Damage Issue.”

Resolution:

After verification, we will arrange for a replacement part, product exchange, or refund as quickly as possible.

If it does not affect normal use:

Steps:

1. Contact our customer service team
2. Provide a description of the damage and include relevant photos or video

Resolution:
We will provide repair guidance or an appropriate compensation plan based on the specific situation.

Helpful Tips

To process your issue efficiently, please prepare the following information:

- Order details (order number, purchase platform, purchase date)
- Clear photos or videos
- We are committed to providing quick and professional solutions, no matter the size of the issue, to ensure your satisfaction.

Thank you for your trust and support!
We hope you enjoy using our product!

PARTS LIST

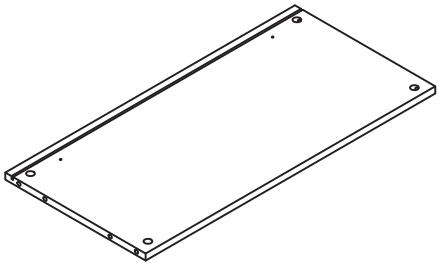

①(710x344x15mm)X1

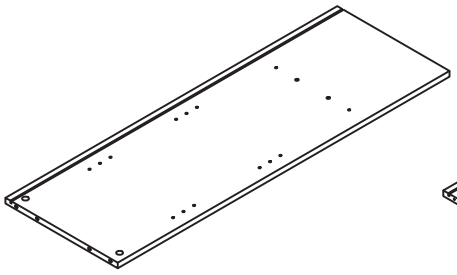

②(1017x344x15mm)X1

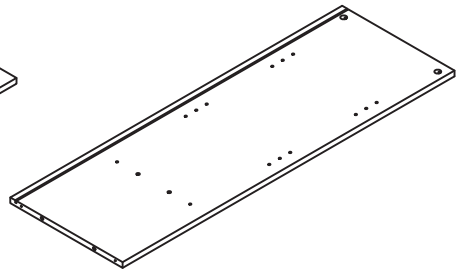

③(1017x344x15mm)X1

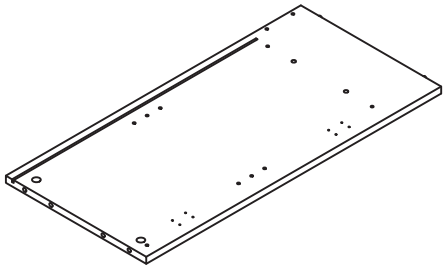

④(723x344x15mm)X1

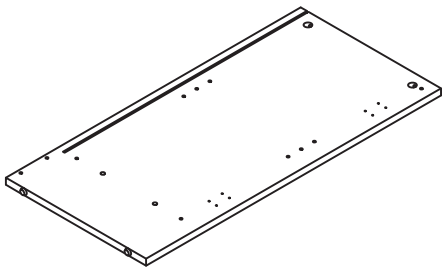

⑤(723x344x15mm)X1

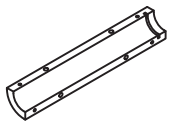

⑥(344x64x27mm)X2

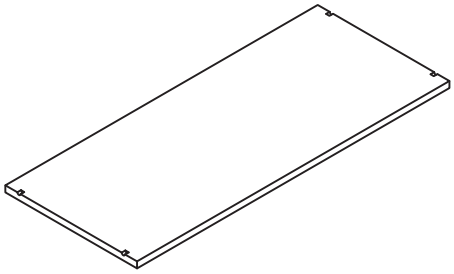

⑦(766x323x15mm)X2

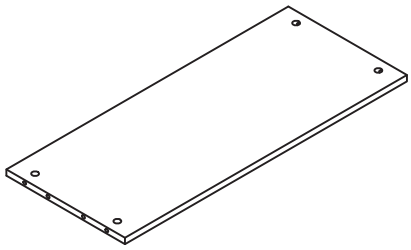

⑧(768x323x15mm)X1

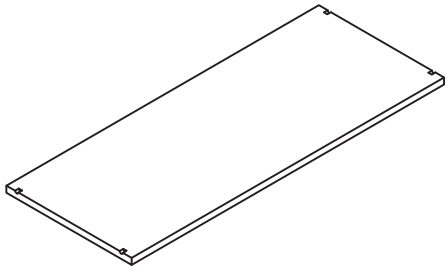

⑩(766x307x15mm)X1

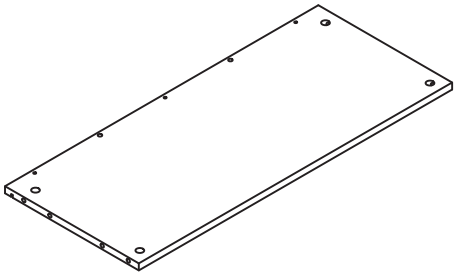

⑪(768x343x15mm)X1

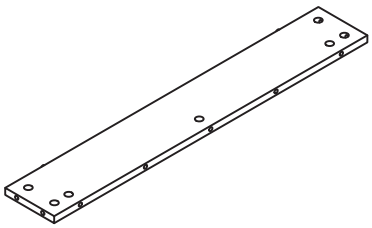

⑫(768x120x15mm)X1

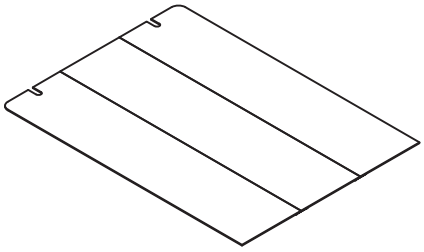

⑬(1055x777x3mm)X1

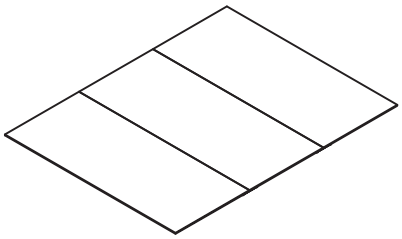

⑭ (597x777x3mm)X1

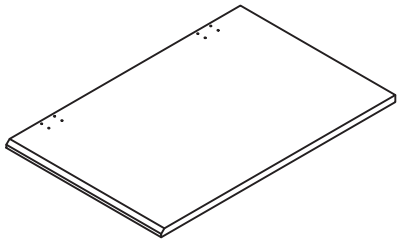

⑮(556x379.5x15mm)X1

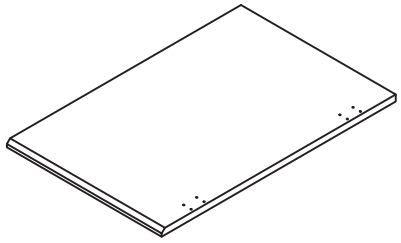

⑯(556x379.5x15mm)X1

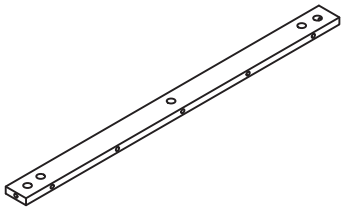

⑰(768x50x15mm)X1

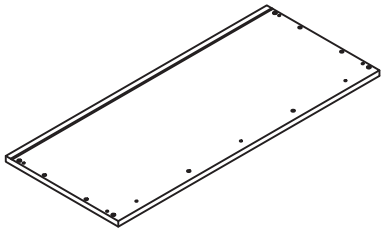

⑱(800x345x15mm)X1

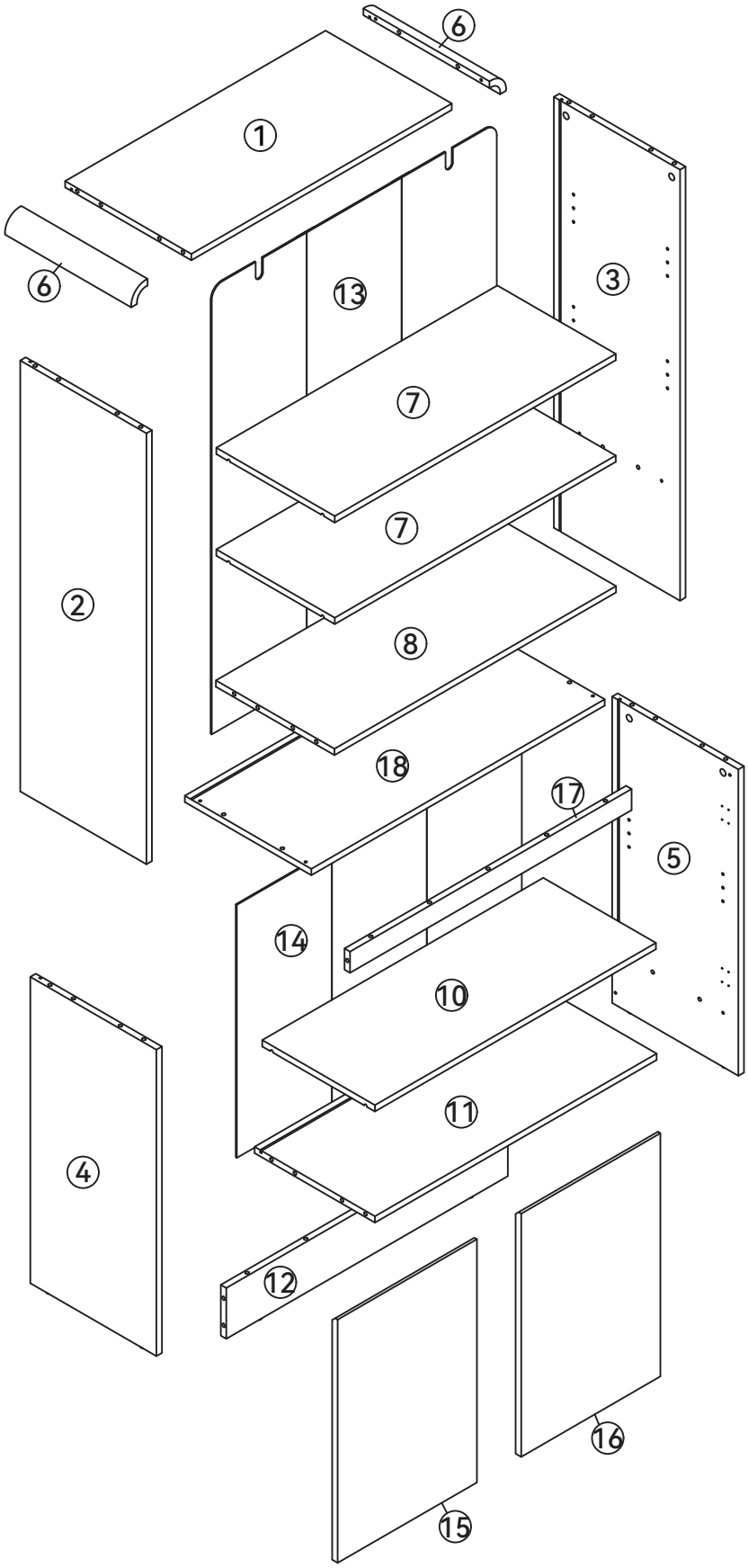
6
1
6
13
3
7
2
7
8
18
17
5
14
10
11
4
12
16
15

HARDWARE PART LIST

Ⓐ	X32+3
	
Ø15*9.5mm	

Ⓑ	X32+3
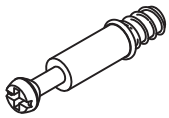	
Ø6.5*35mm	

Ⓒ	X28+2
	
Ø8*30mm	

Ⓓ	X32+3
	
Ø3.5*12mm	

Ⓔ	X4+1
	
Ø6.3*50mm	

Ⓕ	X4
	
112*43*32mm	

Ⓖ	X12+2
	
Ø5*16mm	

Ⓗ	X18+1
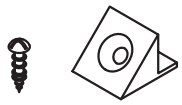	
Ø3*14mm	

Ⓘ	X1
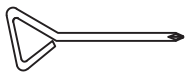	
70*30*5mm	

Ⓙ	X1set
	

Cam Lock Fastening System

Insert the cam bolt into the hole first, then insert the cam lock and lock it.

1

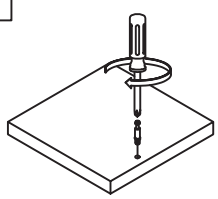

2

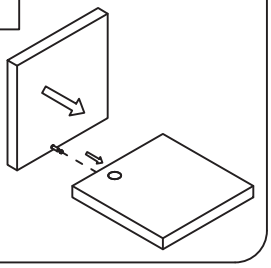

3

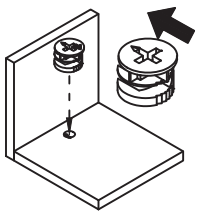

The opening must point toward the edge of the board

4

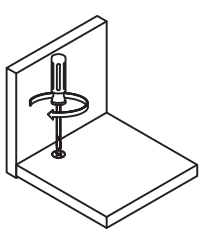

STEP 1

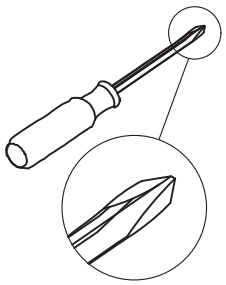

Ⓑ	X4
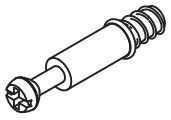	
ø6.5*35mm	

Secure hardware (B) onto panels (2) and (3).

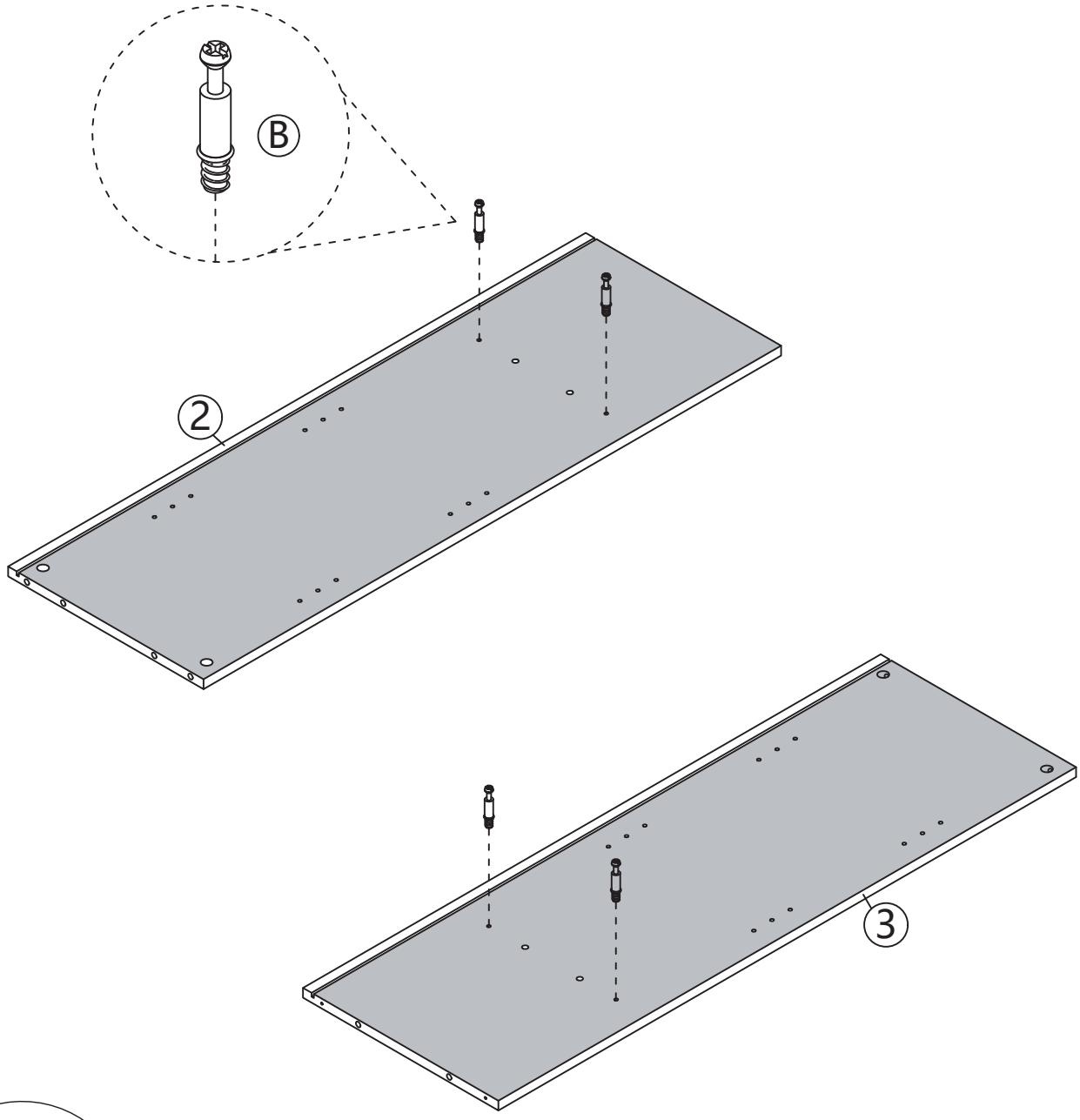

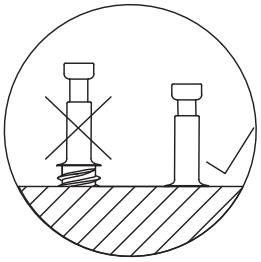

STEP 2

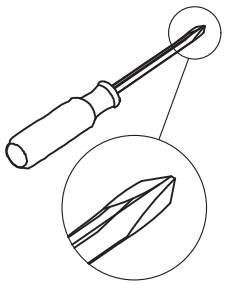

Ⓐ	X4
ø15*9.5mm	

Ⓒ	X4
ø8*30mm	

Insert hardware (C) into the corresponding holes of panel (8), then connect it to panels (2) and (3), and secure with hardware (A).

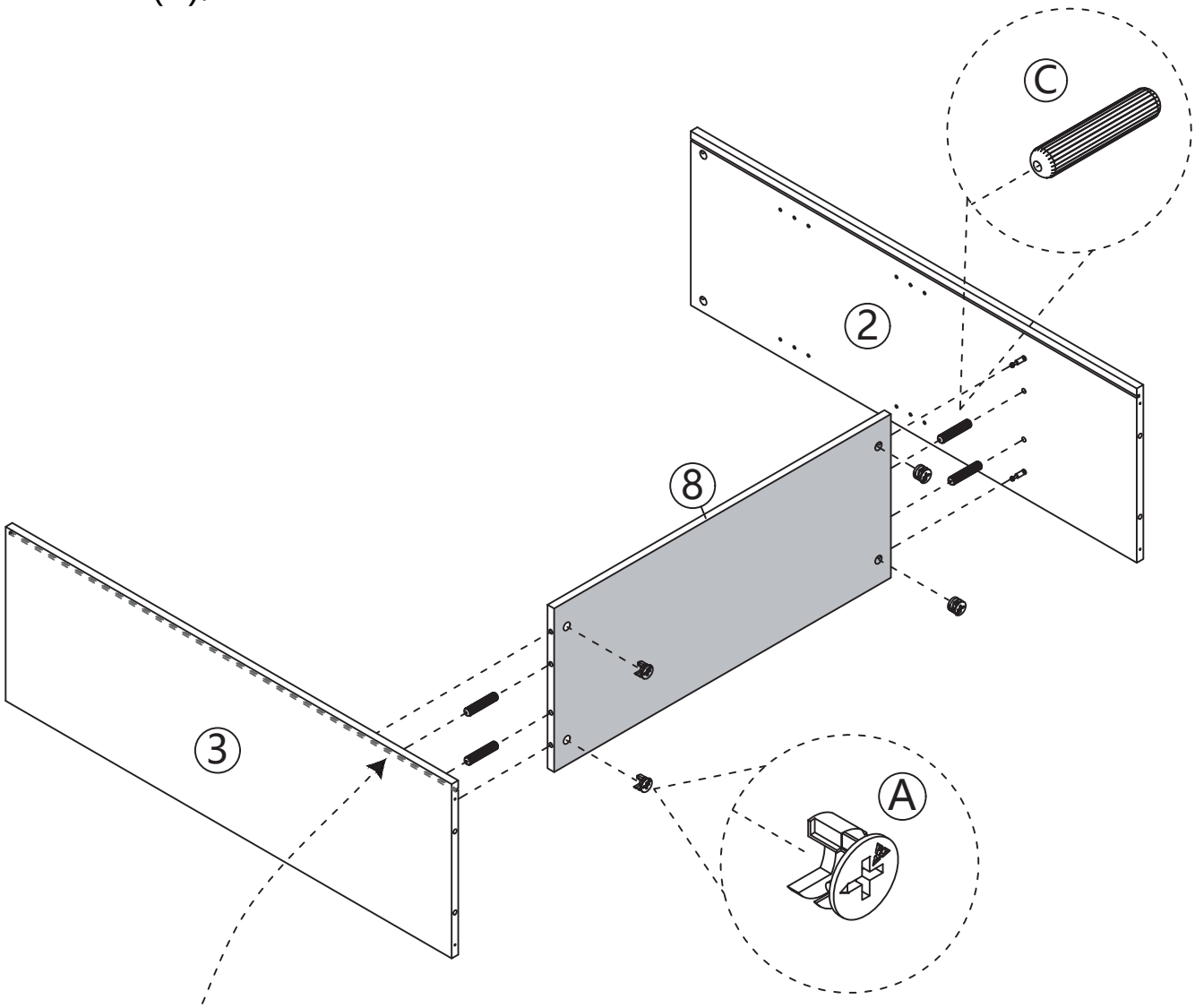

The groove is on the back.

Insert the cam bolt into the hole first, then insert the cam lock and lock it.

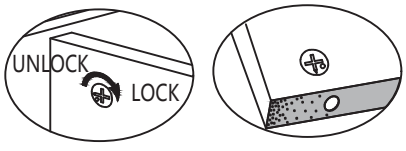

Proper orientation of CAM LOCK

STEP 3

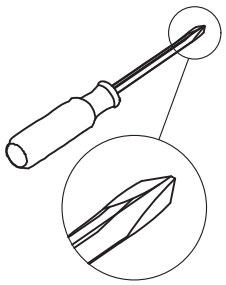

Ⓒ	X4
	
ø8*30mm	

Ⓔ	X4
	
ø6.3*50mm	

Insert hardware (C) into the corresponding holes of panels (2) and (3), then use screws (E) to pass through panel (18) and connect it to panels (2) and (3).

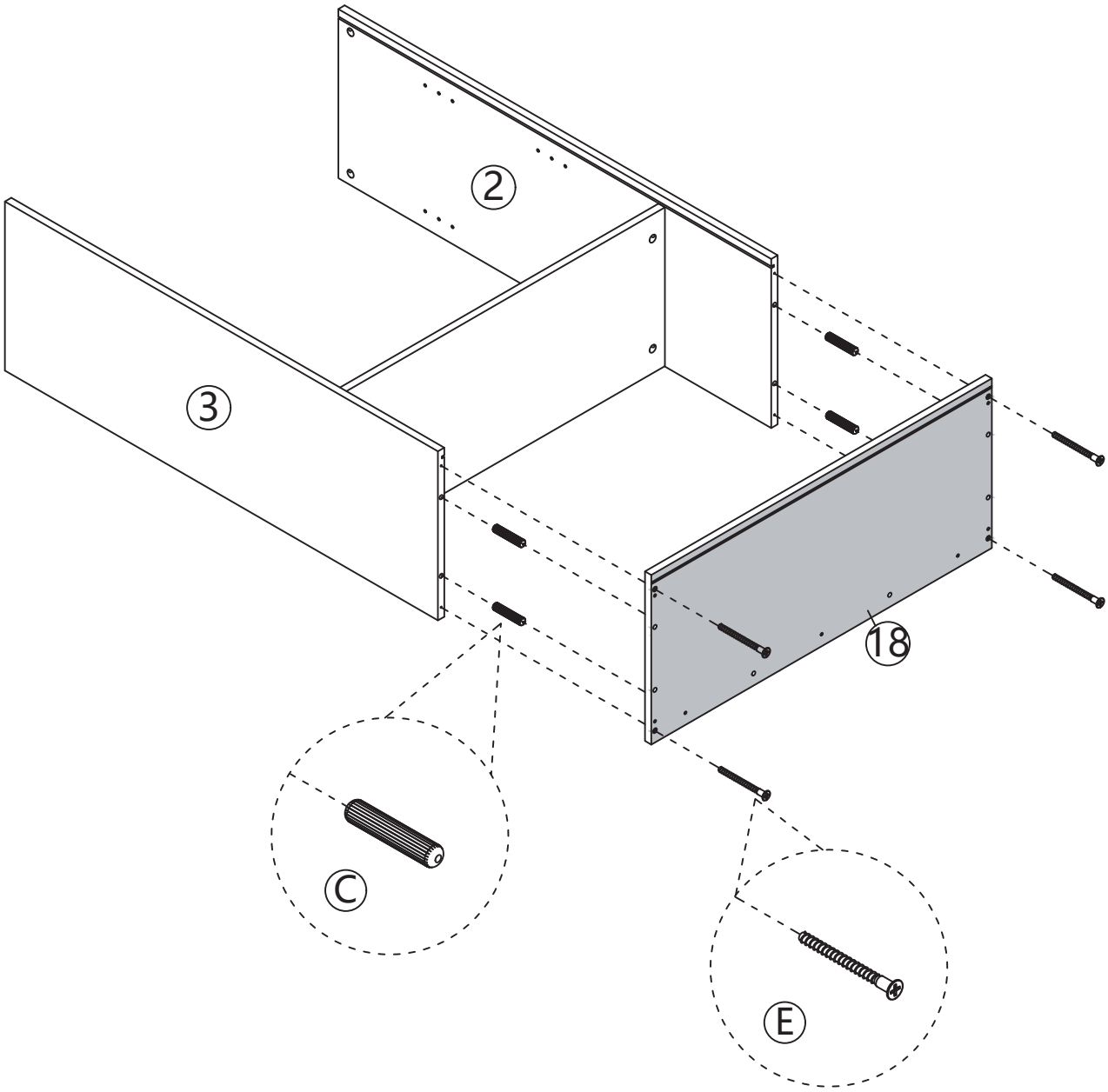

STEP 4

Align panel (13) with the grooves of panels (2) and (3) and insert it as shown. Note: the side with tape should face the back.

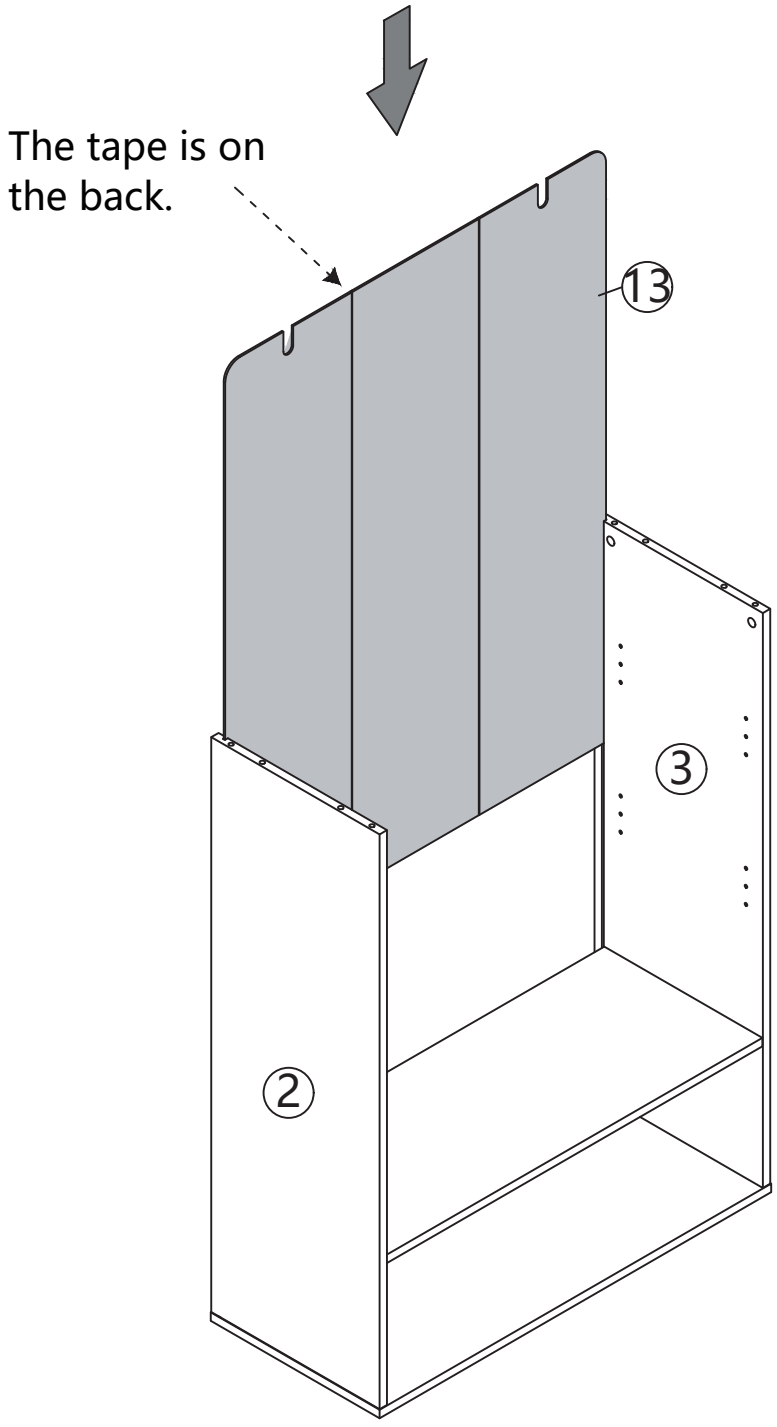

STEP 5

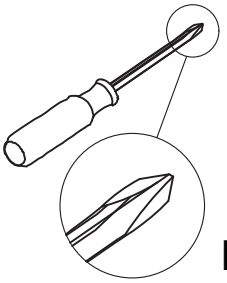

A	X4
	
ø15*9.5mm	

B	X8
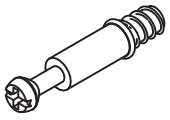	
ø6.5*35mm	

C	X4
	
ø8*30mm	

First secure hardware (B) onto panel (6) twice, then insert hardware (C) into the corresponding holes of panel (1) to connect it with panel (6), and secure with hardware (A).

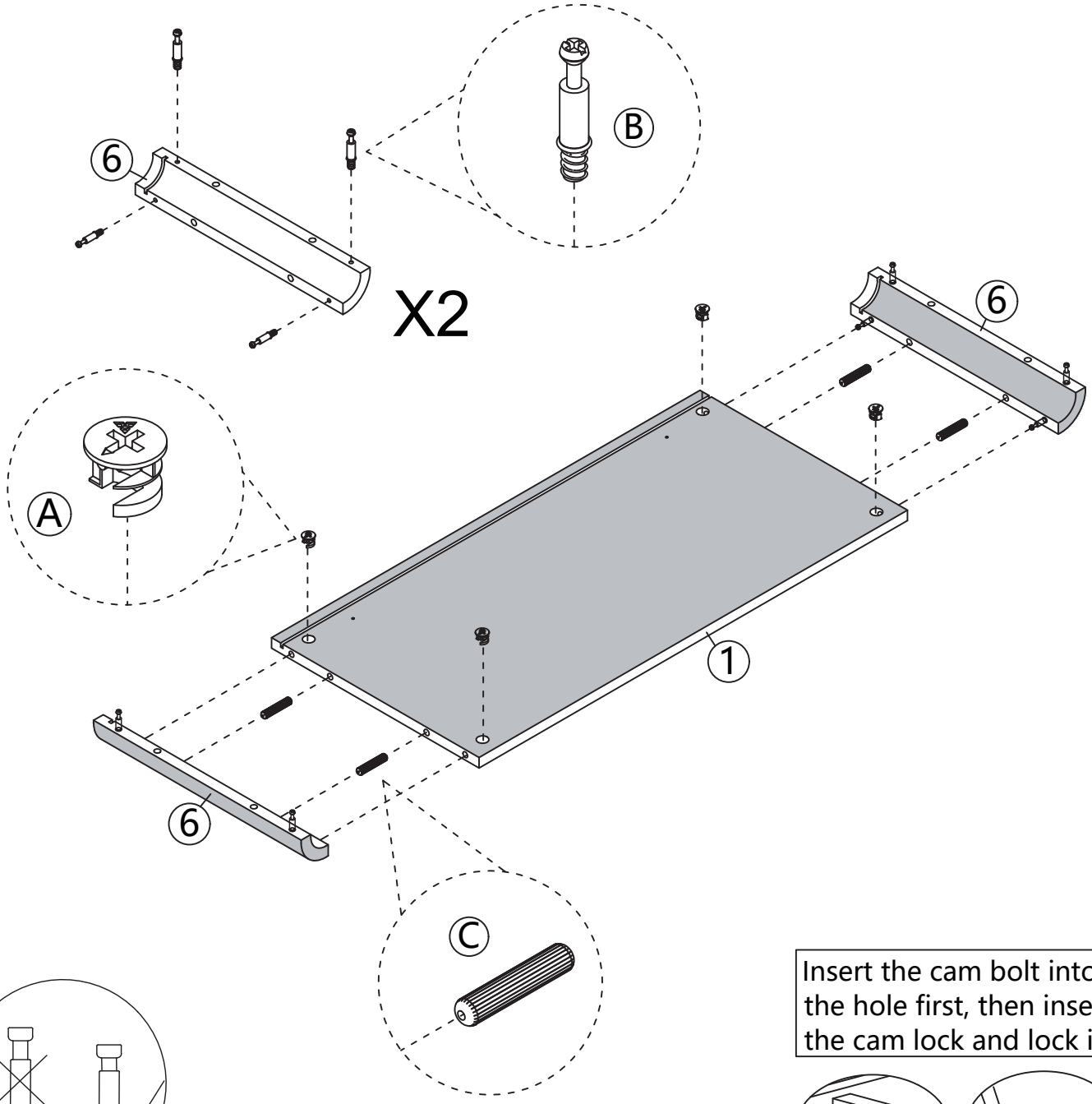

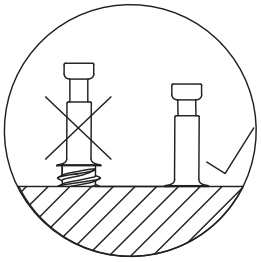

Insert the cam bolt into the hole first, then insert the cam lock and lock it.

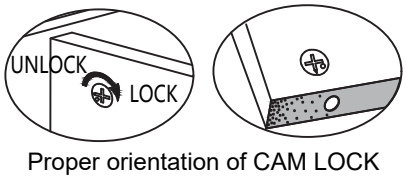

Proper orientation of CAM LOCK

STEP 6

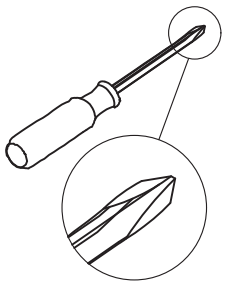

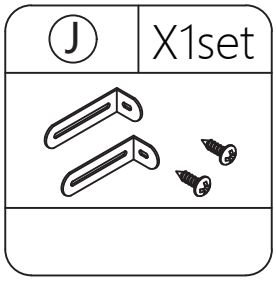

Secure hardware (J) onto panel (1), flush with the edge as shown.

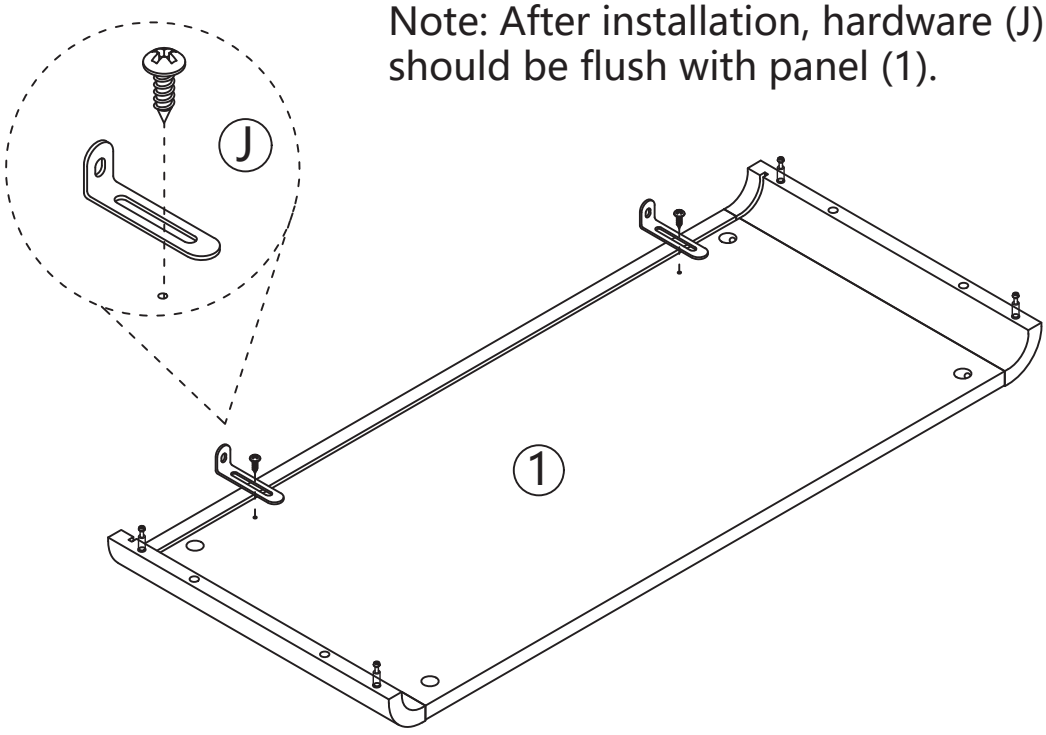

Note: After installation, hardware (J) should be flush with panel (1).

STEP 7

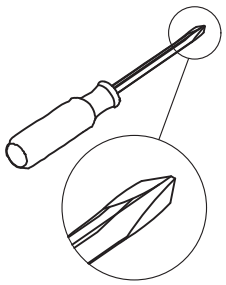

Ⓐ	X4
	
ø15*9.5mm	

Ⓒ	X4
	
ø8*30mm	

Insert hardware (C) into the corresponding holes of panels (2) and (3), connect to panel (1), and secure with hardware (A).

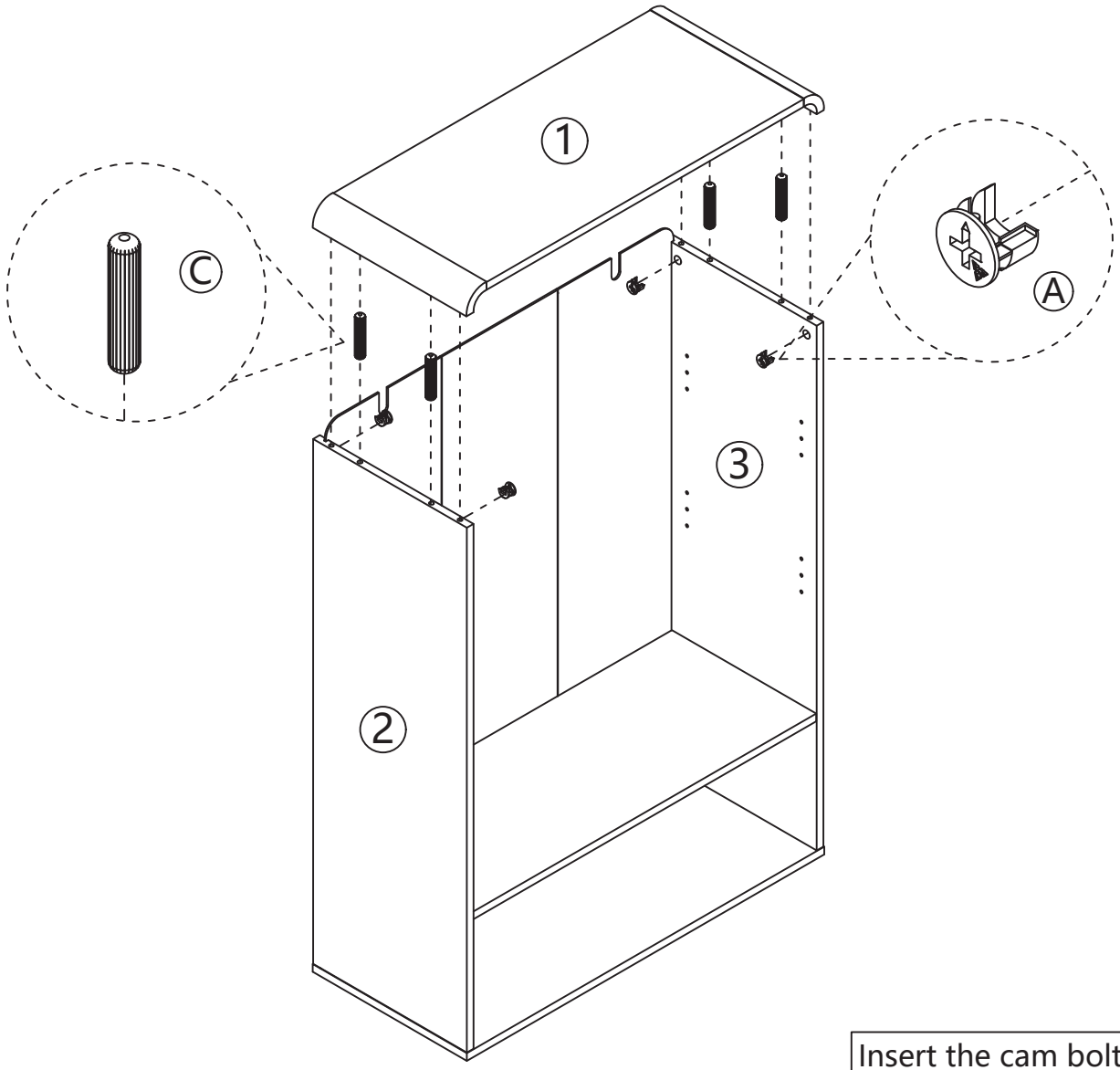

Insert the cam bolt into the hole first, then insert the cam lock and lock it.

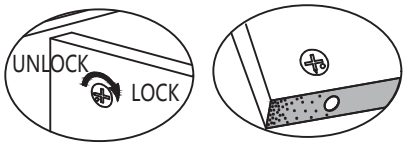

Proper orientation of CAM LOCK

STEP 8

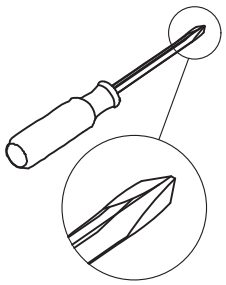

Ⓑ	X7
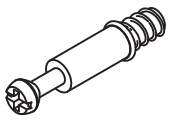	
ø6.5*35mm	

Secure hardware (B) onto panel (18) as shown.

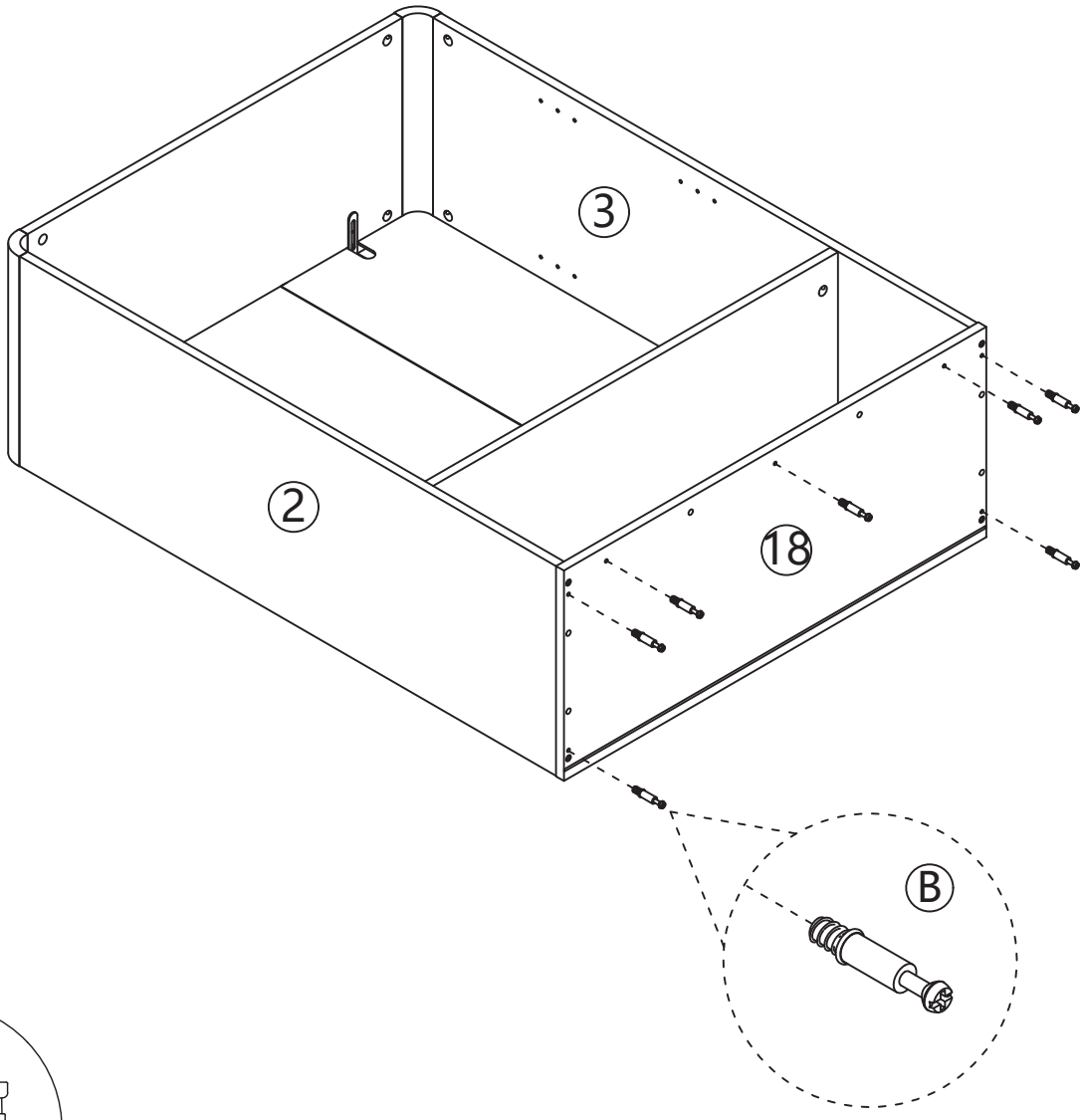

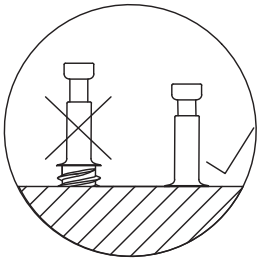

STEP 9

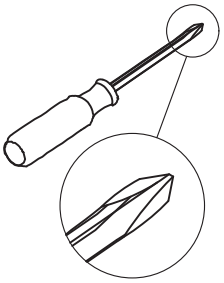

A	X3
	
ø15*9.5mm	

B	X3
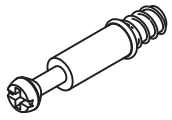	
ø6.5*35mm	

C	X2
	
ø8*30mm	

First secure hardware (B) onto panel (11), then insert hardware (C) into the corresponding holes, connect to panel (12), and secure with hardware (A).

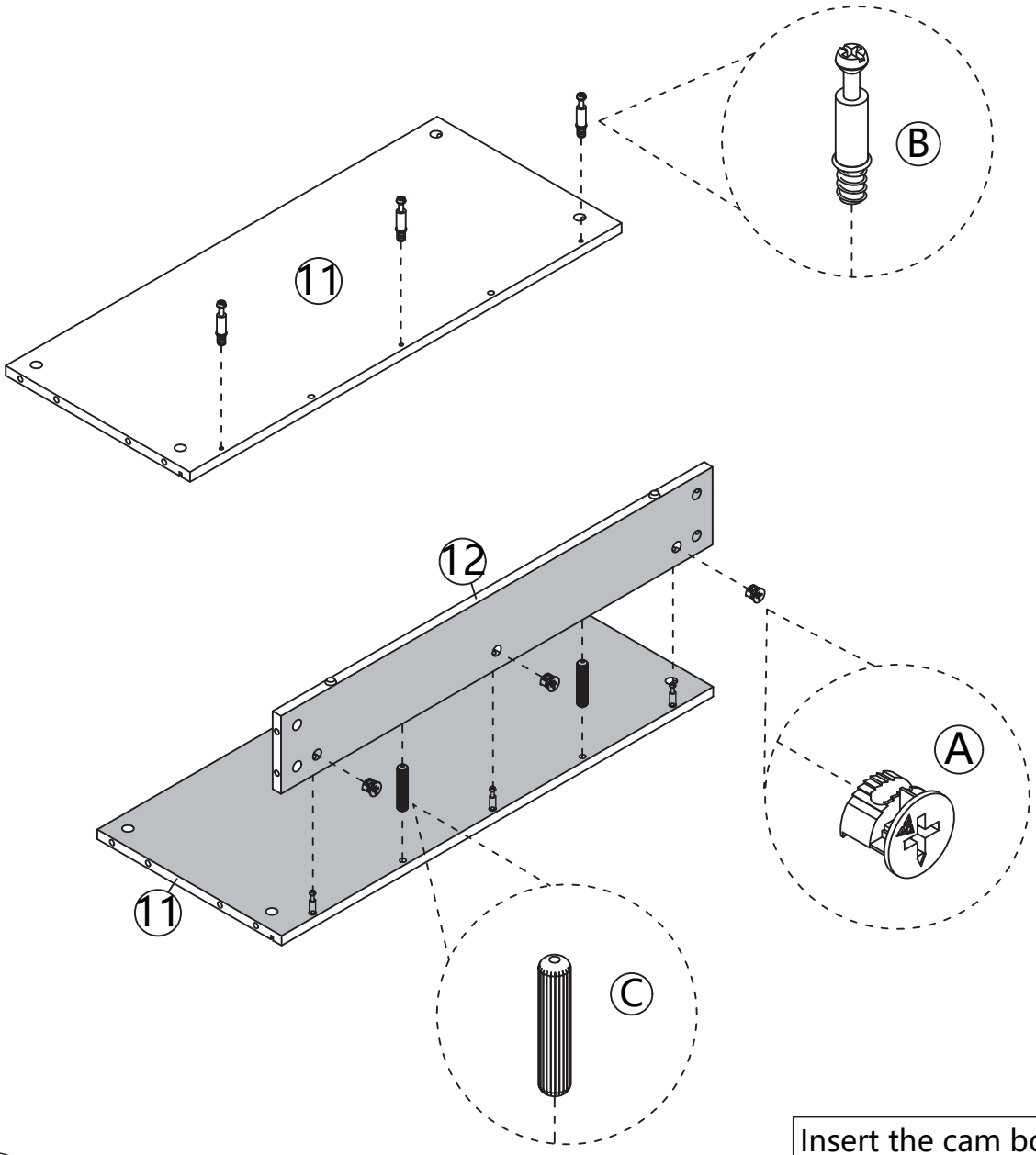

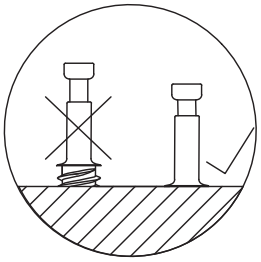

Insert the cam bolt into the hole first, then insert the cam lock and lock it.

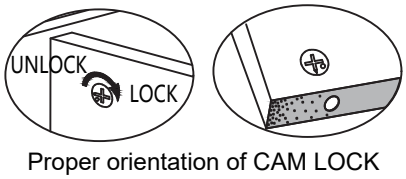

Proper orientation of CAM LOCK

STEP 10

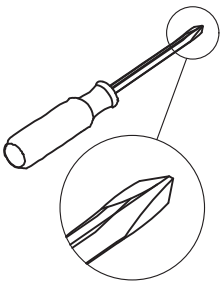

Ⓑ	X10
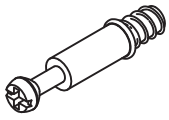	
ø6.5*35mm	

Secure hardware (B) onto panels (4) and (5).

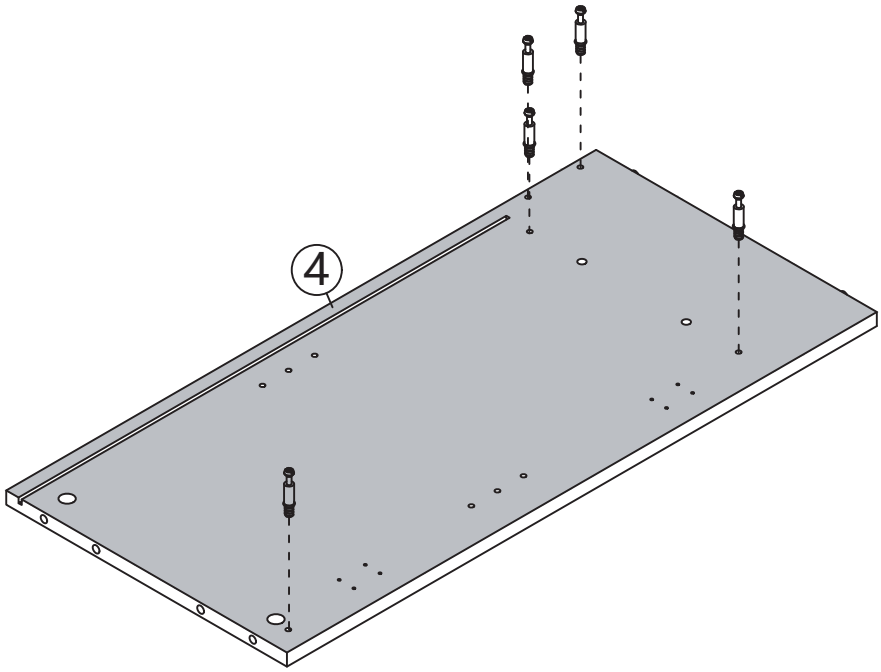

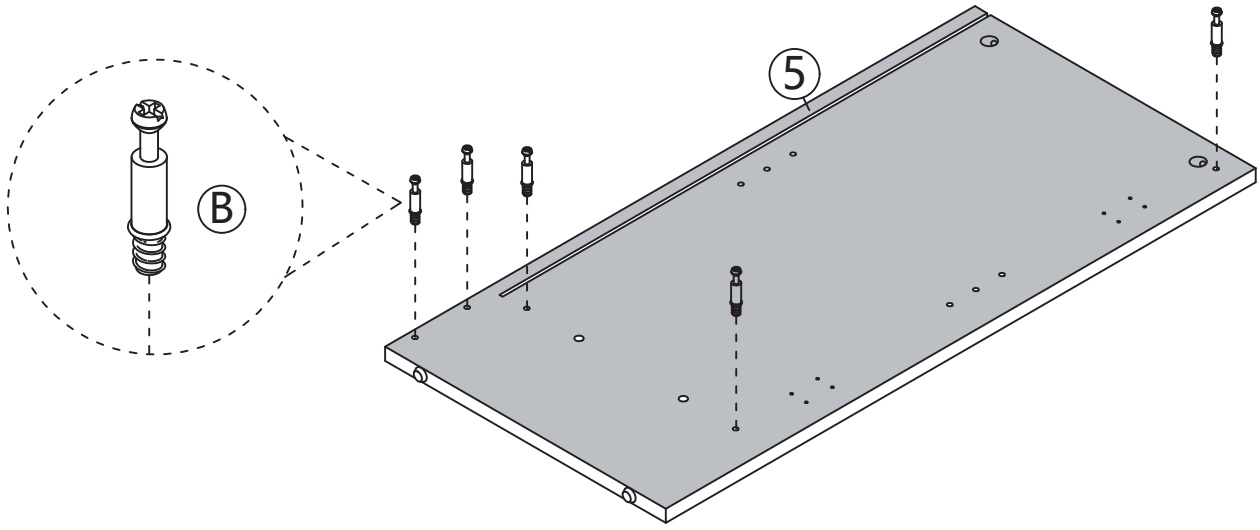

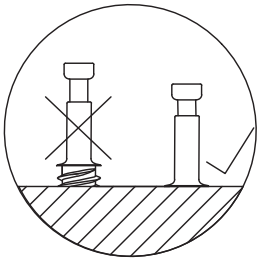

STEP 11

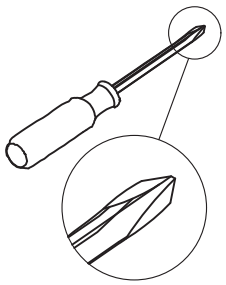

Ⓐ	X5
ø15*9.5mm	

Ⓒ	X2
ø8*30mm	

Insert hardware (C) into the corresponding holes of panel (11), then connect panels (11), (12), and (17) to panel (5), and secure with hardware (A).

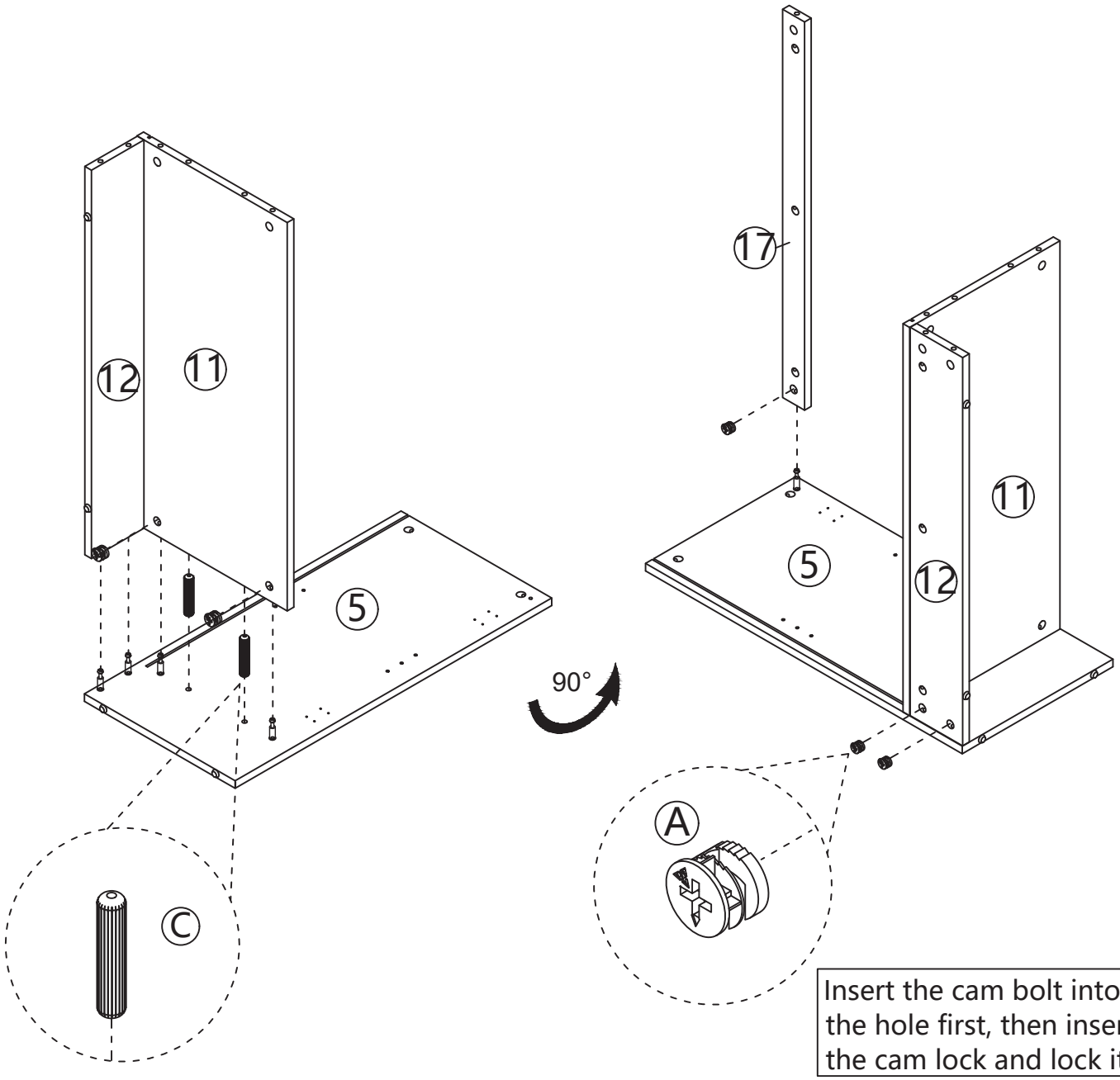

Insert the cam bolt into the hole first, then insert the cam lock and lock it.

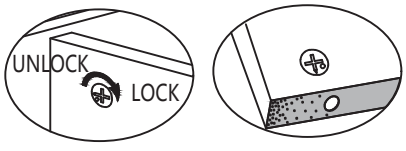

Proper orientation of CAM LOCK

STEP 12

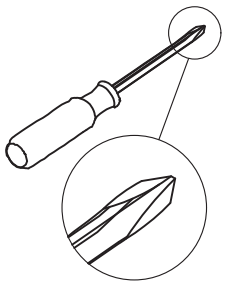

Ⓐ	X5
	
ø15*9.5mm	

Ⓒ	X2
	
ø8*30mm	

Insert hardware (C) into the corresponding holes of panel (11), then connect panels (11), (12), and (17) to panel (4), and secure with hardware (A).

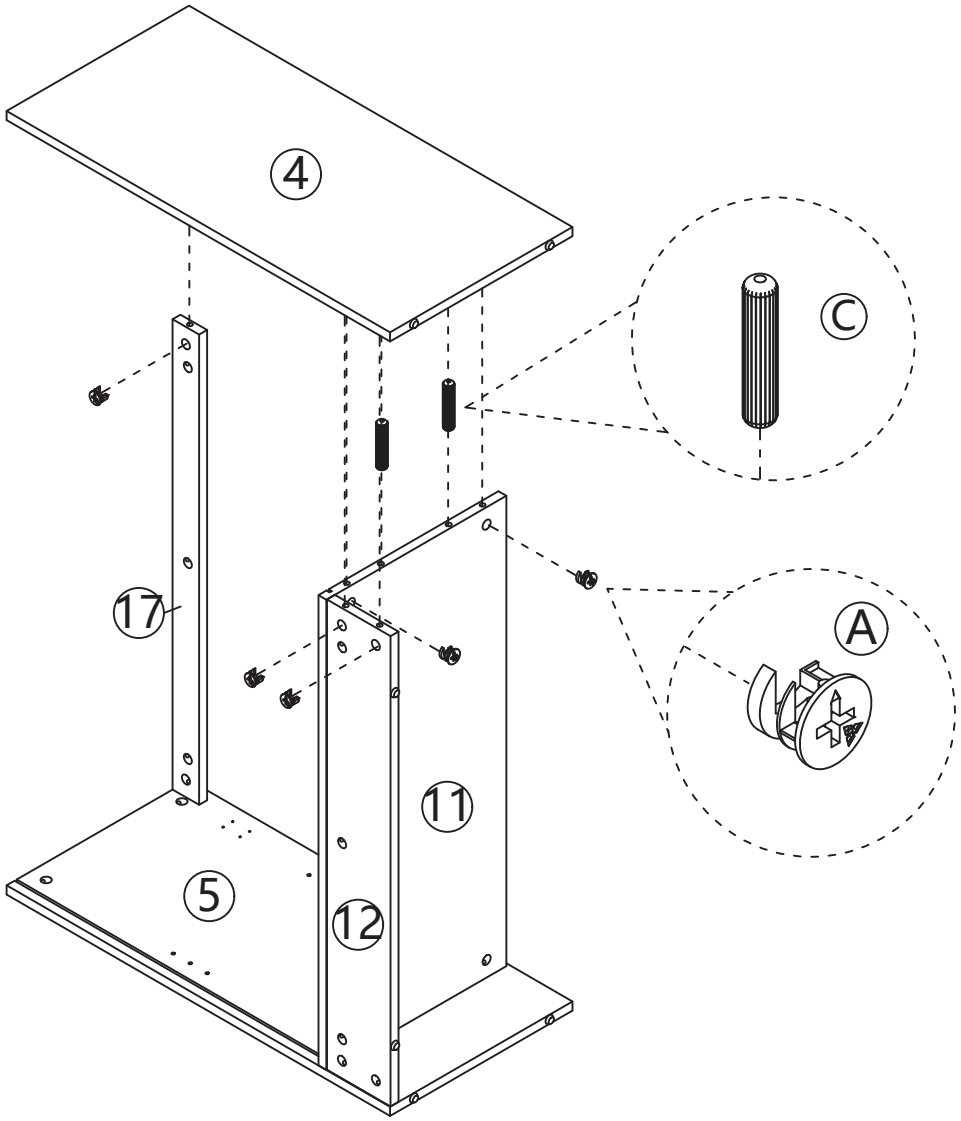

Insert the cam bolt into the hole first, then insert the cam lock and lock it.

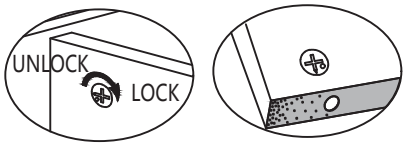

Proper orientation of CAM LOCK

STEP 13

Align panel (14) with the grooves of panels (4) and (5) and insert it as shown. The side with tape should face the back.

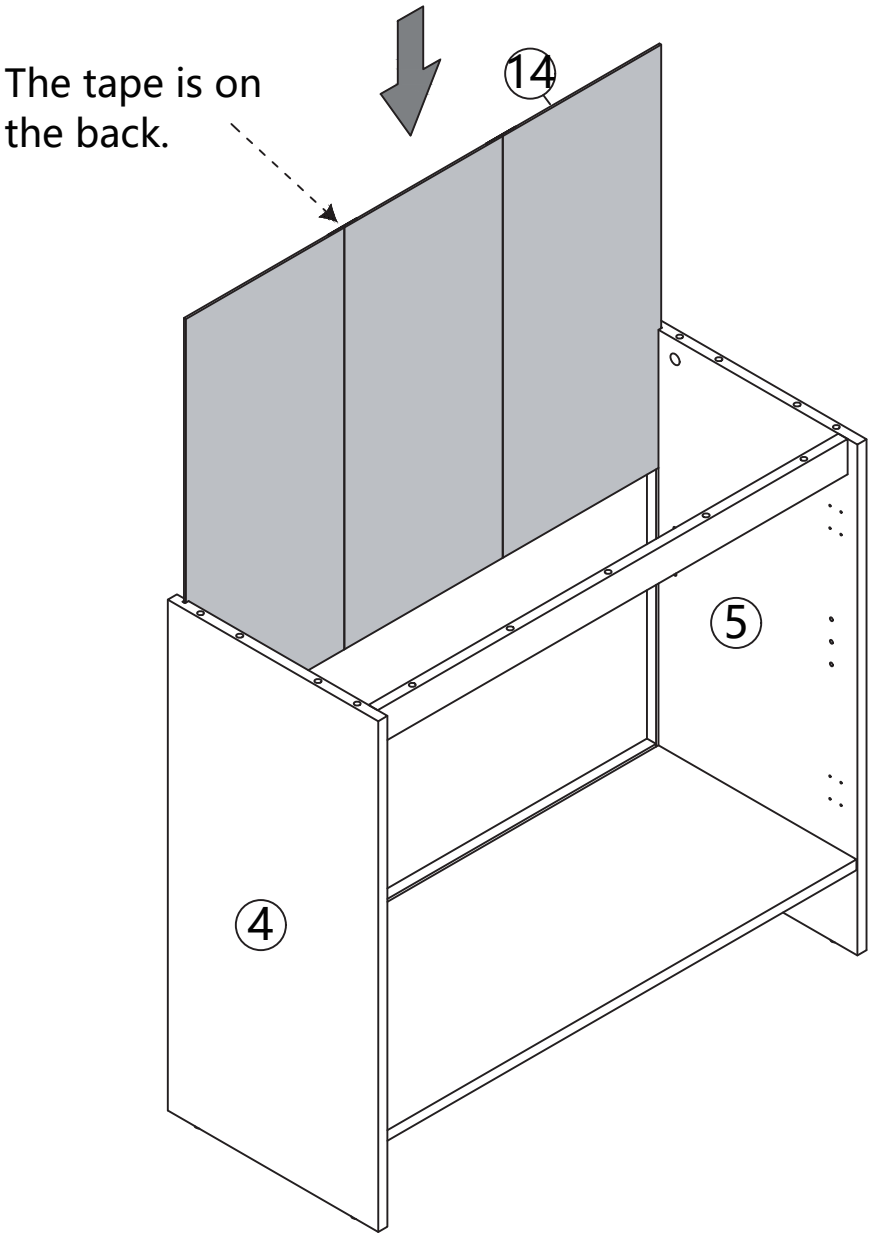

STEP 14

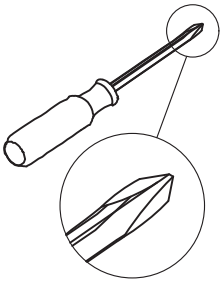

Ⓐ	X7
	
ø15*9.5mm	

Ⓒ	X6
	
ø8*30mm	

Insert hardware (C) into the corresponding holes of panels (4) and (5), connect to panel (18), and secure with hardware (A). This step requires two people.

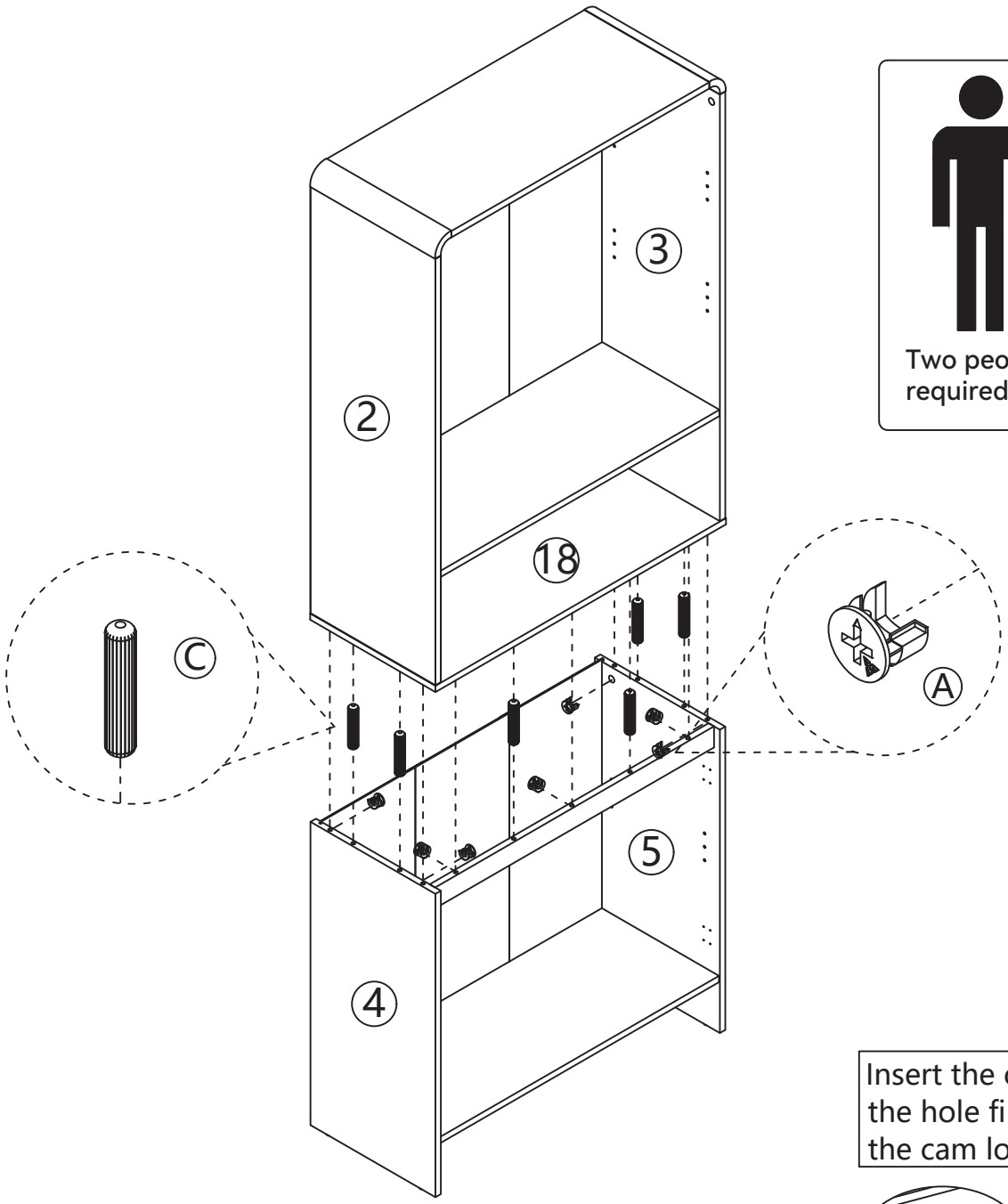



Insert the cam bolt into the hole first, then insert the cam lock and lock it.

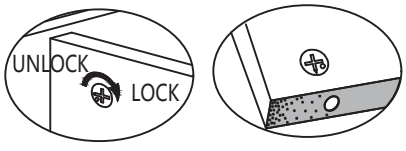

Proper orientation of CAM LOCK

STEP 15

Ⓖ	X12
	
ø5*16mm	

Insert hardware (G) into the holes of panels (2), (3), (4), and (5), then place panels (7) and (10) into the cabinet.

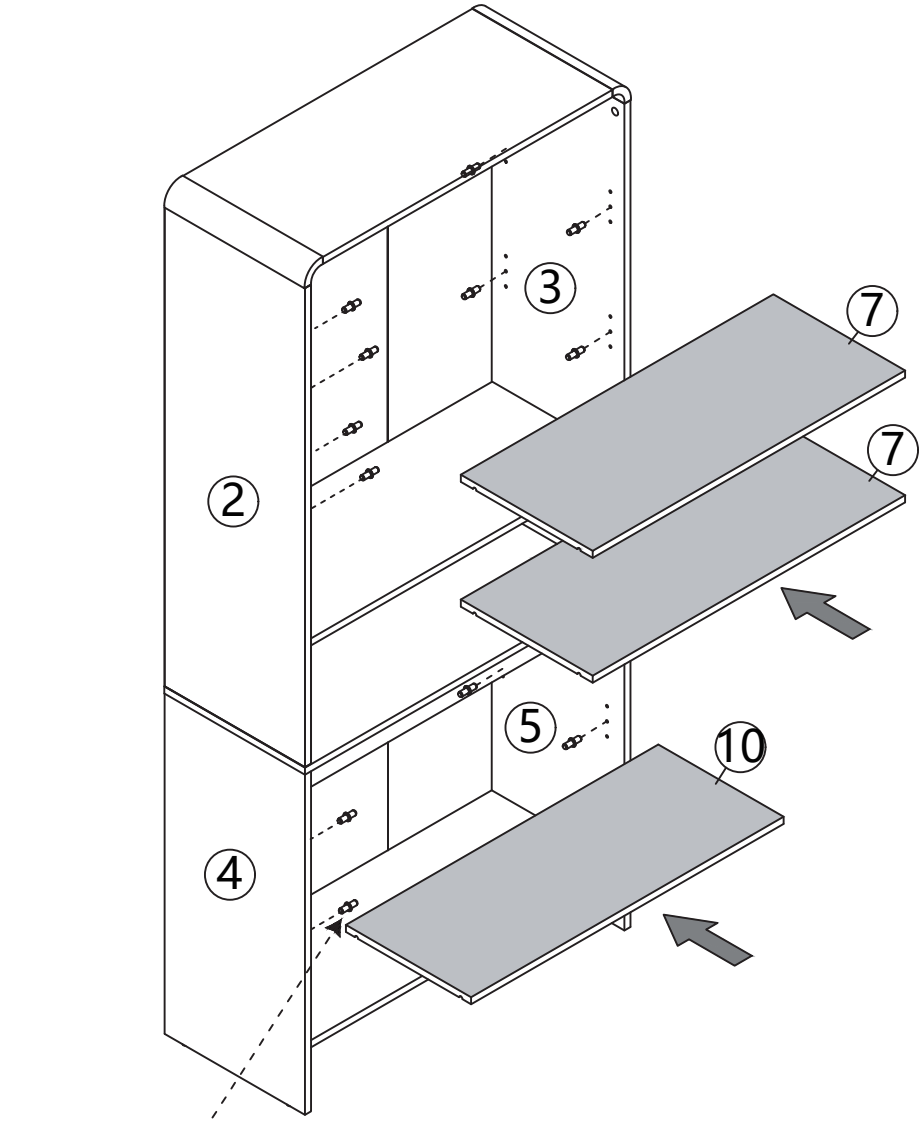

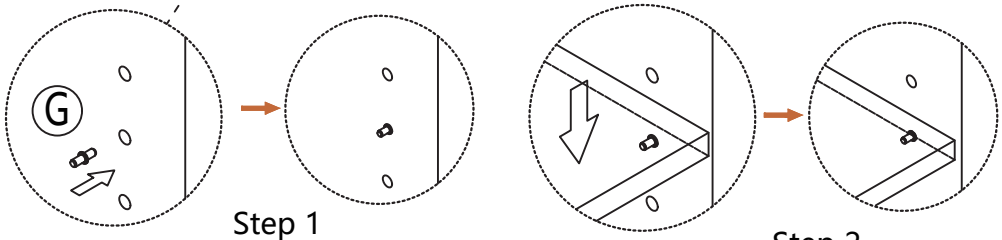

Step 1

Select the desired height and place it in.

Step 2

Make sure the grooves of panels (7) and (10) face downward

STEP 16

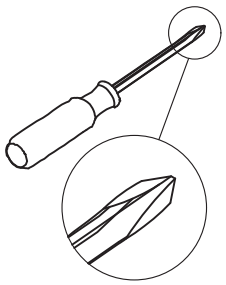

Ⓓ	X16
	
ø3.5*12mm	

Ⓕ	X4
	
112*43*32mm	

Use screws (D) to secure hardware (F) onto panels (15) and (16).
Pay attention to the direction.

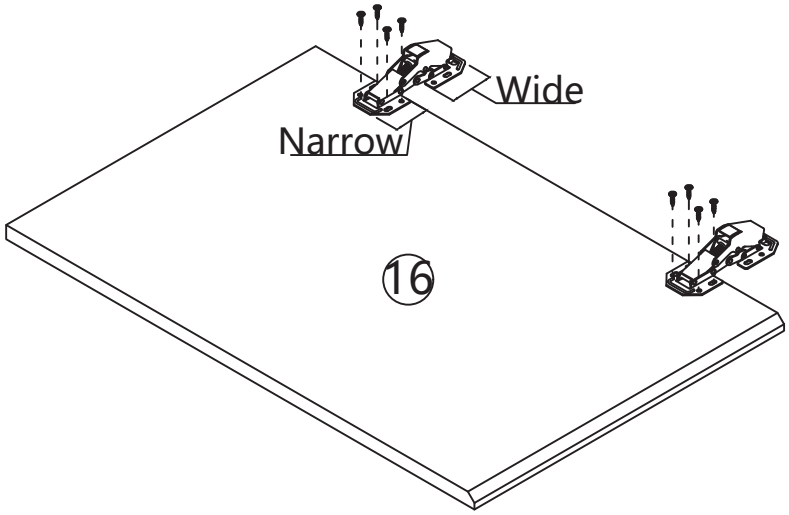

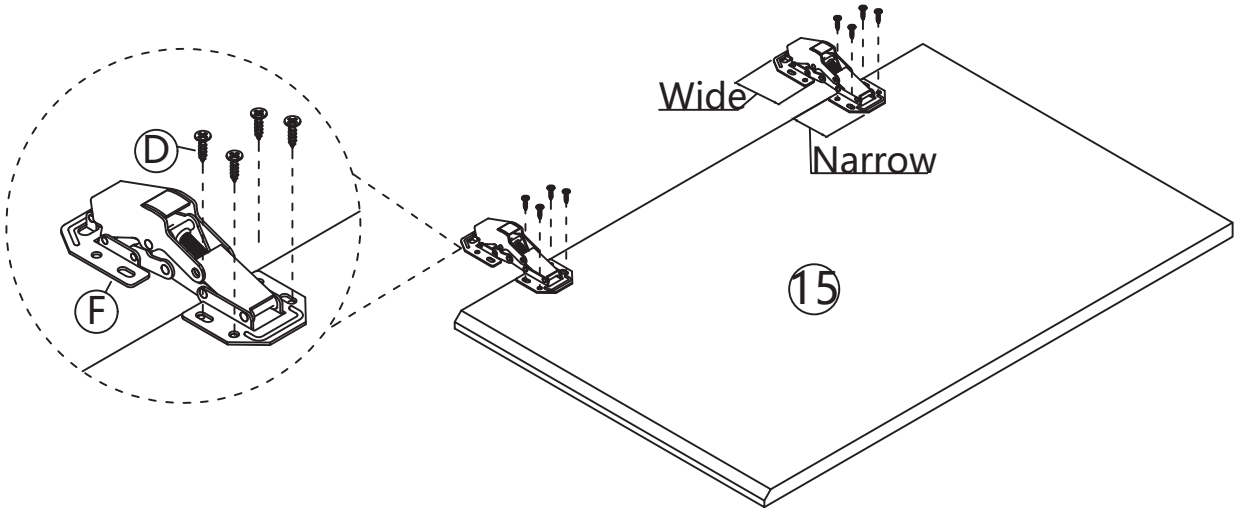

Note the direction of hardware (F).

STEP 17

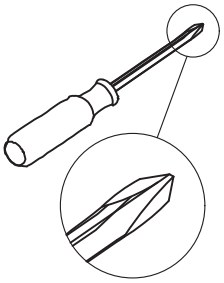

Ⓓ	X16
	
ø3.5*12mm	

Use screws (D) to secure panels (15) and (16) to panels (4) and (5) as shown.



Note: One person should hold the door panel while the other tightens the screws.

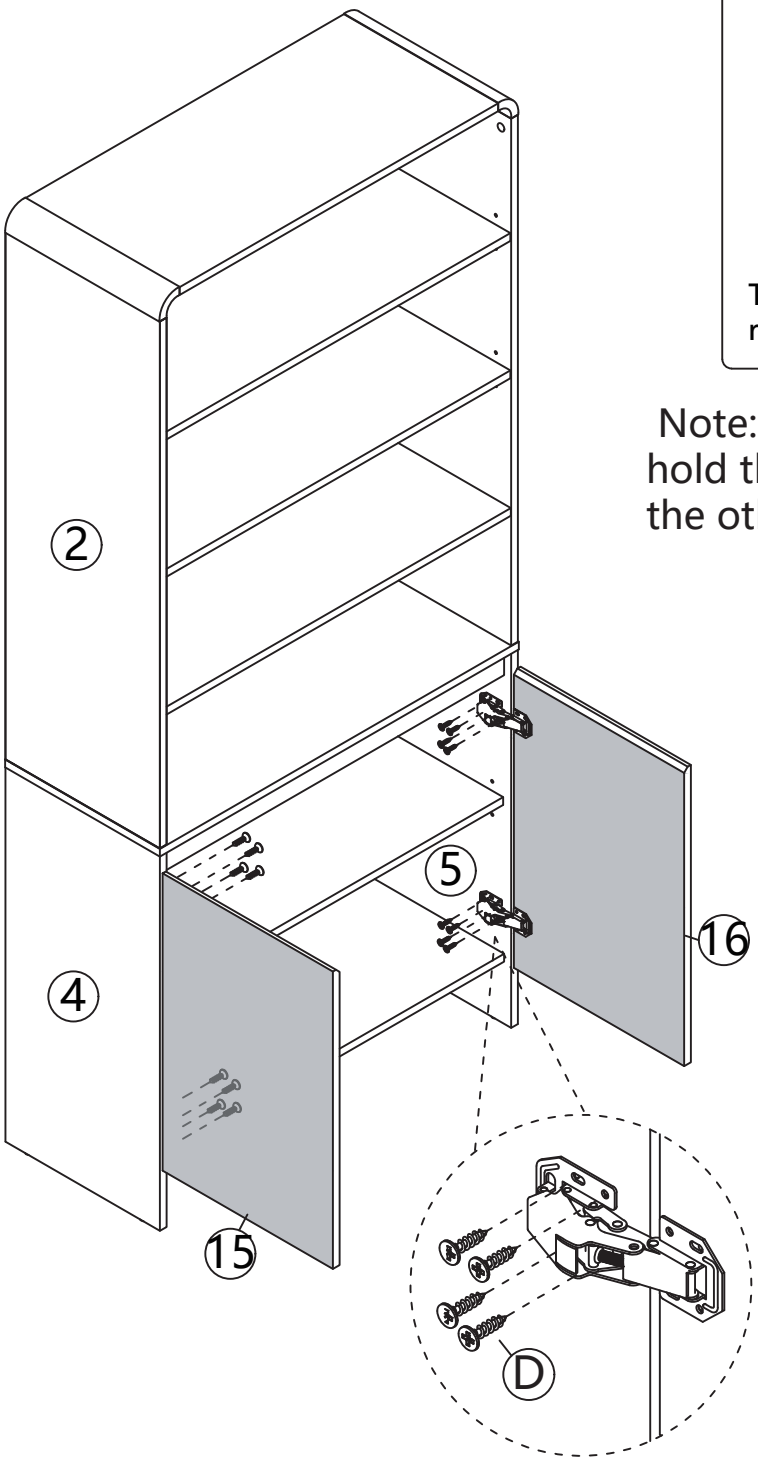

STEP 18

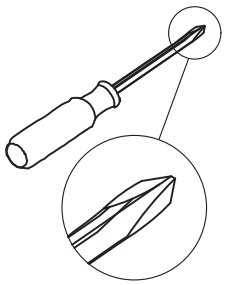

Ⓗ	X18
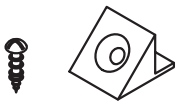	
ø3*14mm	

Insert the plastic clips from hardware (H) into the back panel grooves, then insert screws through the holes in the clips and secure them in place.

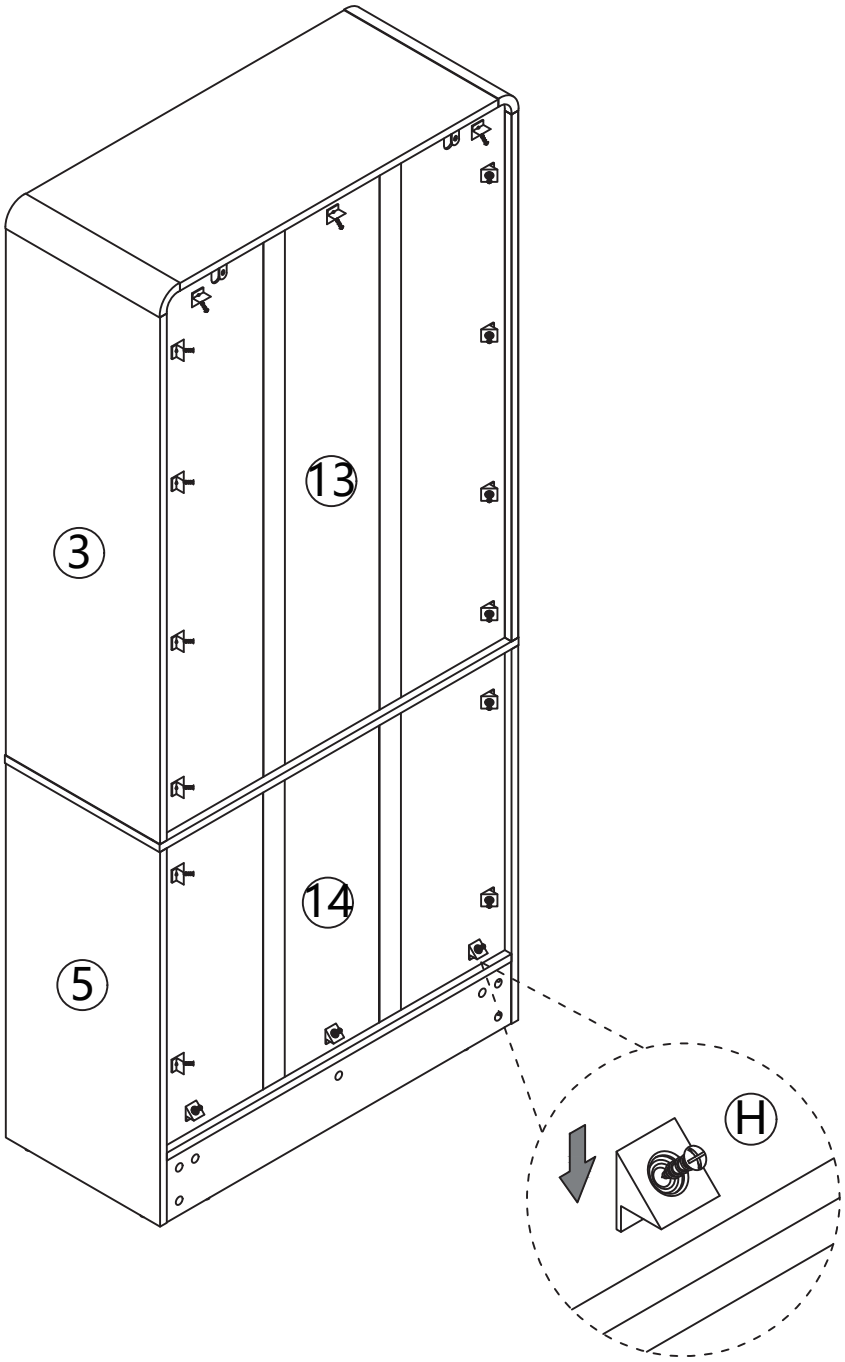

STEP 19

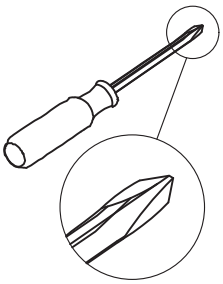

Ⓙ	X1set
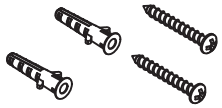	

⚠WARNING





Children may be killed by furniture tip-over.To reduce the risk of furniture tip-over:

- Always install the anti-tip device provided.
- Do not place a TV on this product.
- Do not allow children to stand, climb, or hang on drawers, doors, or shelves.

This label is permanent.
Do not remove.

Install the anti-tip device:

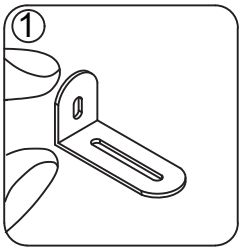

1. Mark the position on the wall.

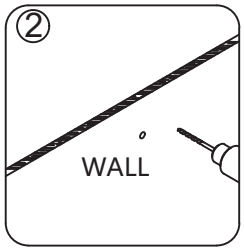

2. Drill two holes with a diameter of 6 mm in the wall.

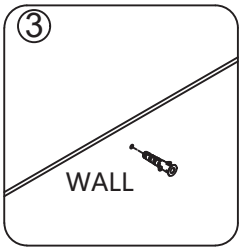

3. Insert two expansion bolts into the holes.

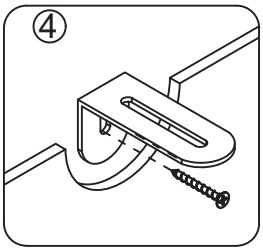

4. Use long screws to secure the device to the wall.

