Option 1:Pendant lamp

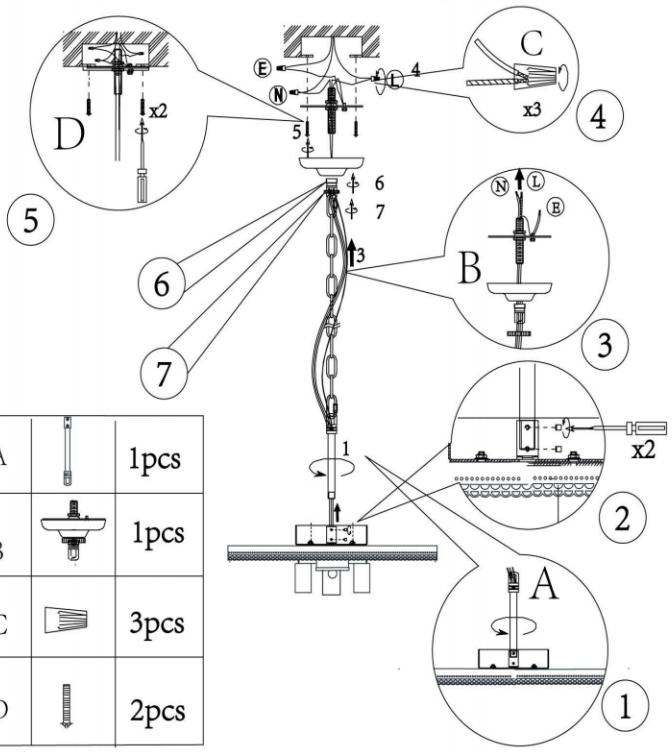

A		1pcs
B		1pcs
C		3pcs
D		2pcs

1

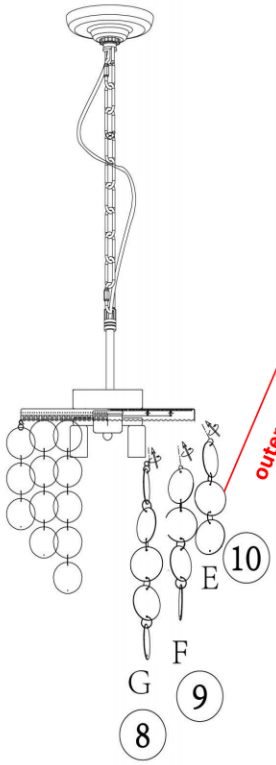

2

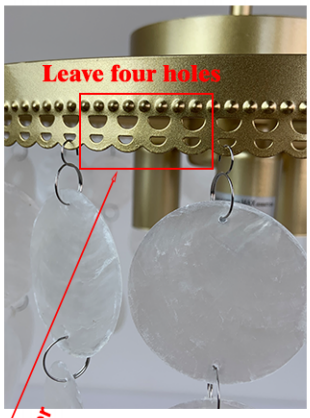

E	F	G
24PCS	18PCS	12PCS

Option 2:Ceiling lamp

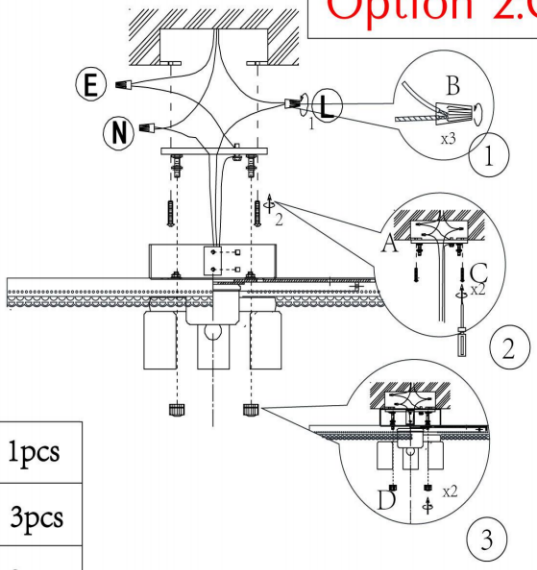

A		1pcs
B		3pcs
C		2pcs
D		2pcs

1

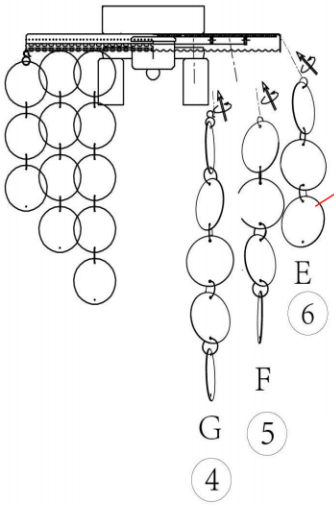

2

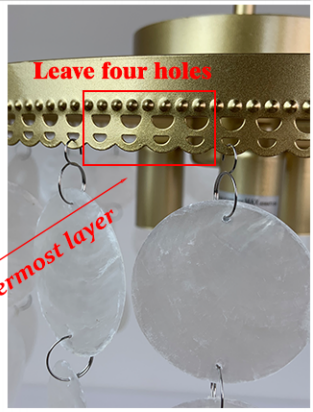

E	F	G
24PCS	18PCS	12PCS