NUU GARDEN®

ENJOY LIFE · SHARE HAPPINESS

INSTRUCTION MANUAL

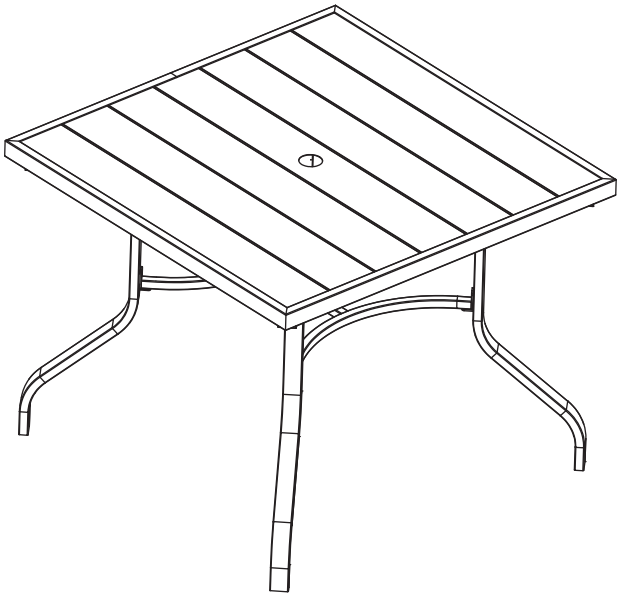

Outdoor Dining Table

TA102BK-02

INTRODUCTION

Thanks for purchasing and trusting NUUGARDEN with your home decorating plans. This product is a piece of furniture designed and made by NUUGARDEN Corp.

We are committed to R&D and innovation and creating the most exquisite and diverse outdoor series.

After unpacking and before every use, check whether the item shows any damage. In addition, check that you have all parts and hardware before assembly. If there is any damage, please do not use it and call customer service at (800) 257-7108 or email service@nuugarden.com. If you do not have all the parts lists, have your dealer contact us and we will send them to you immediately.

This item of furniture is intended for indoor and outdoor use. Please take time to read and follow the instructions below. Then, use this item as described in this operating manual. We accept no liability for damage caused by improper use.

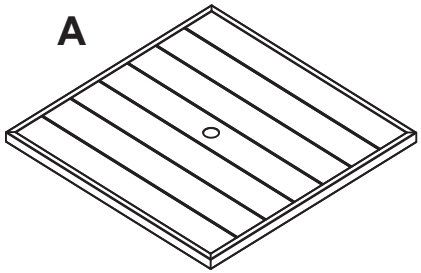

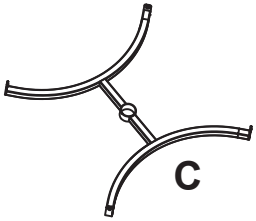

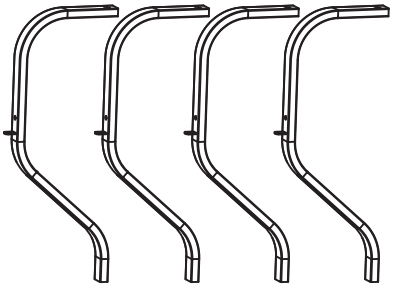

SCAN ME!

For more assembly instructions, please visit our YouTube channel and refer to videos of similar models.

https://www.youtube.com/@nuugardenusa

Part Number	Images and Sizes	Qty.	Part Number	Images and Sizes	Qty.	Part Number	Images and Sizes	Qty.
A		1	D	M6*30	8	G		1
B		4	E	M6*20	8			
C	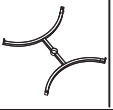	1	F		16			

ASSEMBLY INSTRUCTIONS

CAVEAT

Note: Please only tighten any bolts once all bolts place correctly and the product is lying flat. If you tighten one bolt, it may cause other bolts to get out of position.

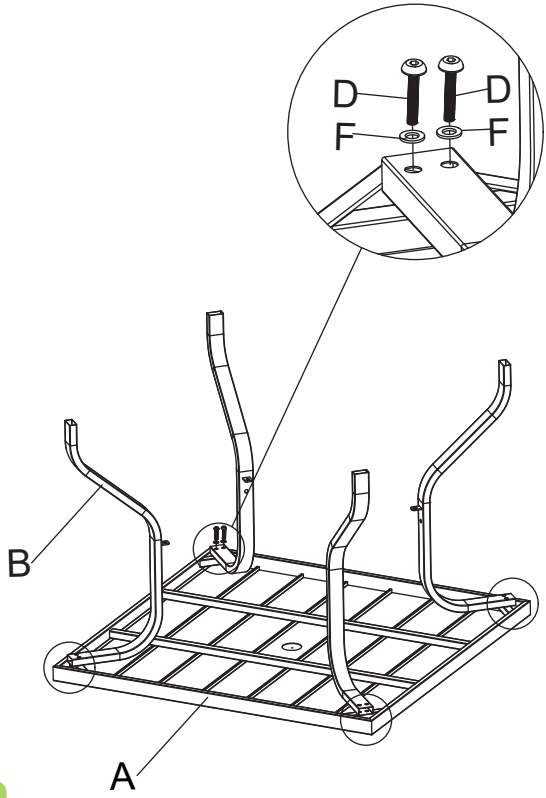

STEP 1

Attach the 4 legs (B) to the table top (A) using 8 bolts (D) and 8 washers (F). Do not over-tighten them.

ASSEMBLY INSTRUCTIONS

CAVEAT

Note: Please only tighten any bolts once all bolts place correctly and the product is lying flat.
If you tighten one bolt, it may cause other bolts to get out of position.

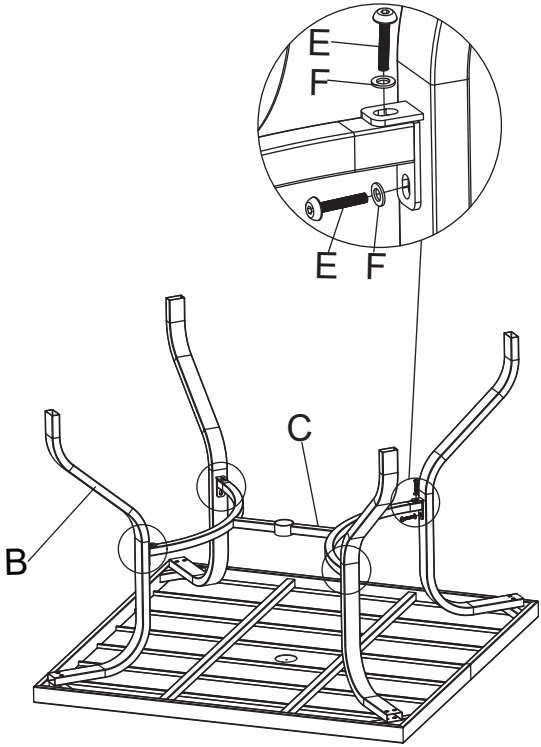

STEP 2

Attach support frame (C) to the table legs (B) using 8 bolts (E) and 8 washers (F). Do not over-tighten them.
Upon completing the entire assembly and bolting up, you can tighten down all screws.

CARE AND MAINTENANCE

Follow the instructions for the product's material to ensure it stays in the best shape as long as possible. The information below is a general guideline. Don't hesitate to get in touch with us to learn more.

• Only rinse it thoroughly with clean water to wash away dirt and grime. Never use abrasive cleansers on the furniture since they can attack the surface and leave behind scratch marks.

• For stubborn grime and stains, use a soft sponge and mild soapy water. Then dry it with a cloth or paper towel.

• Check the stability of the screws, nuts, and nut caps before each use. Then, tighten them up after one to two months' use whenever required.

• Avoid improper use, and be careful not to scratch or damage the surface with sharp objects.

• When you move your furniture, lift it rather than pulling or pushing it to avoid damaging the floor, legs, and mounting.

CUSTOMER SERVICE

Thanks for purchasing NUUGARDEN furniture. We are here to help you maximize your enjoyment and appreciation of it.

Please do not hesitate to contact our customer service if you have any questions regarding assembly or accessories.

Add: 6366 Corley Road, Norcross, GA 30071.

Tel: (800) 257-7108

Web: https://nuumart.com

E-mail: service@nuugarden.com

Service time: Mon-Fri, 8:30 AM-5:30 PM, EST

NUUGARDEN USA

NUU GARDEN®

ENJOY LIFE · SHARE HAPPINESS

Nuu Garden Corp.

Add: 6366 Corley Road, Norcross GA 30071.
Tel: (800) 257-7108
Web: https://nuumart.com
E-mail: service@nuugarden.com