ASSEMBLY INSTRUCTION

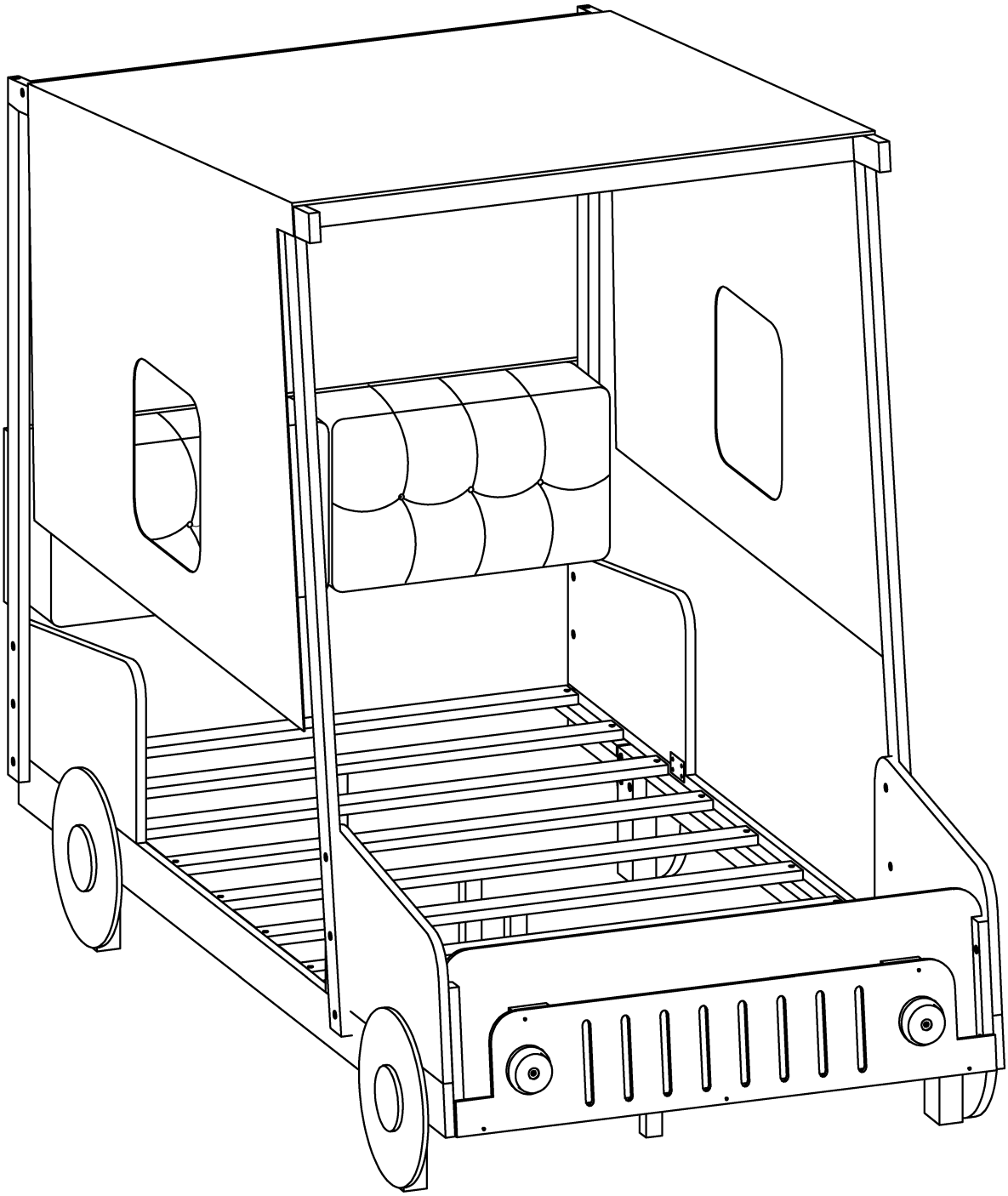

Detail:

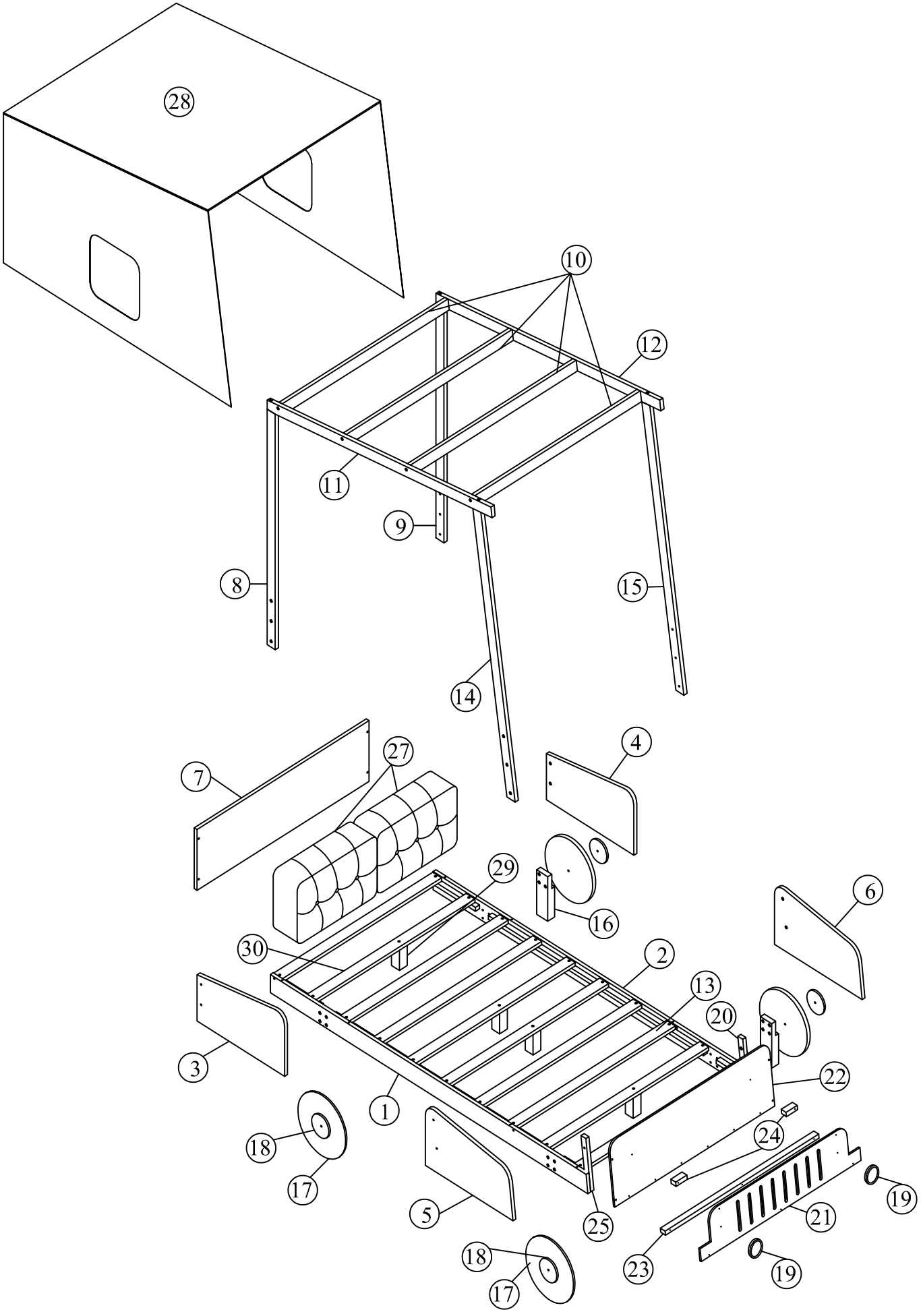
28
10
12
11
9
8
15
14
7
27
4
29
16
6
30
2
13
20
3
22
1
24
18
17
5
25
19
21
23
18
19
17

Part List

1 x1  Side Rail	2 x1 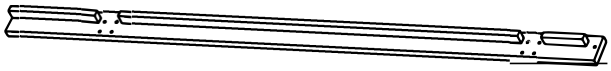 Side Rail
3 x1 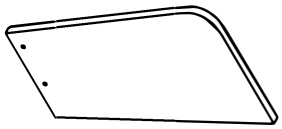 Left Panel	4 x1 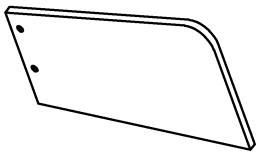 Right Panel
5 x1  Left Panel	6 x1 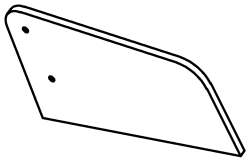 Right Panel
7 x1 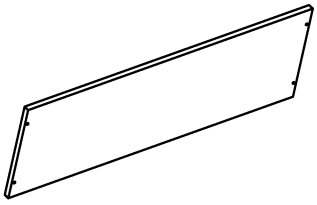 Back Panel	8 x1 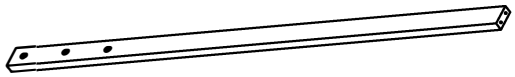 Back Left Leg
9 x1 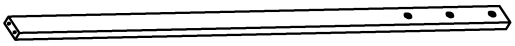 Back Right Leg	10 x4 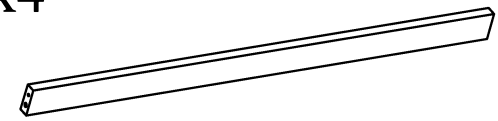 Roof Rails
11 x1 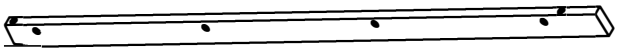 Roof Rails	12 x1 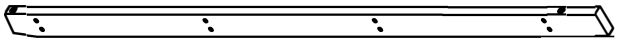 Roof Rails
13 x6 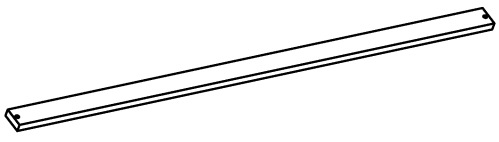 Slats	14 x1 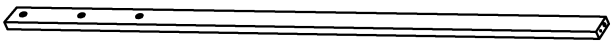 Front Left Leg

Part List

15 x1 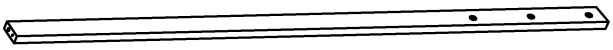 Front Right Leg	16 x4 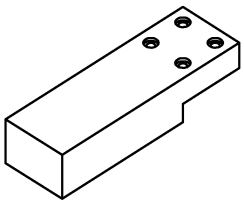 Support Side Rails
17 x4 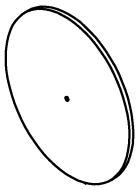 Decorate	18 x4  Decorate
19 x2 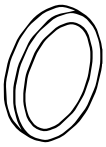 Decorate	20 x1 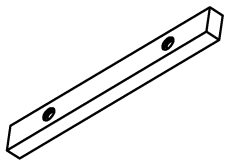 Connect wooden stick
21 x1 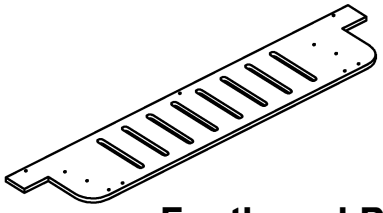 Footboard Panel	22 x1 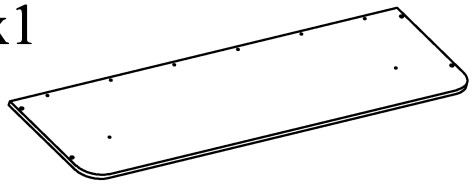 Footboard Panel
23 x1 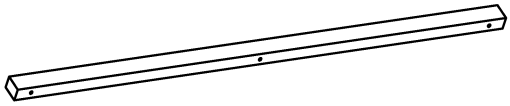 Connect wooden stick	24 x2 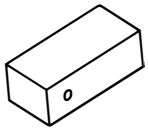 Connect wooden stick
25 x1 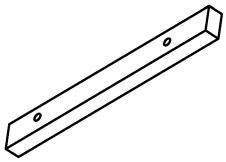 Connect wooden stick	27 x2 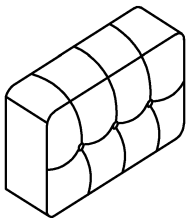 Upholstered fabric
28 x1 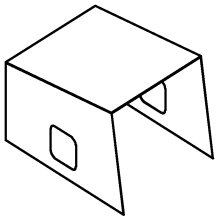 Fabric	29 x4 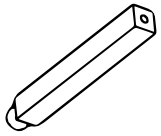 Support Legs

Part List

(30) x4

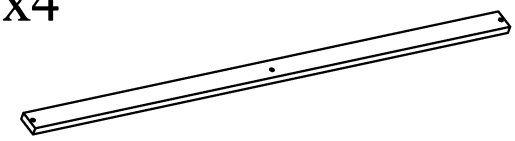

Slats

Hardware List

No.	OUTLOOK	DESC	QTY
A	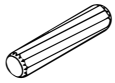	Dowel Ø8*30mm	20pcs
B	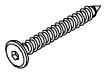	Screws M6*40mm	12pcs
C	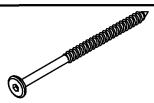	Screws M6*70mm	4pcs
D		Bolts M6*25mm	4pcs
E		Bolts M6*30mm	20pcs
F		Bolts M6*35mm	16pcs
G		Round head screw #8*20mm	4pcs
H		Round head screw #8*25mm	13pcs
I		Round head screw #8*30mm	4pcs
J	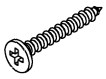	Flat head screw #8*25mm	20pcs
K	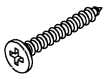	Flat head screw #7*12mm	8pcs
L		Allen key 60*22*4mm	1pc
M		Metal rectangle	2pcs
N	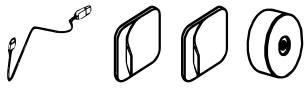	Led Light	2pcs
O		Bolts M6*15mm	28pcs

ASSEMBLY TOOLS REQUIRED (NOT INCLUDED)

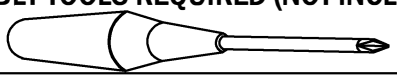

STEP 1:

H		6pcs

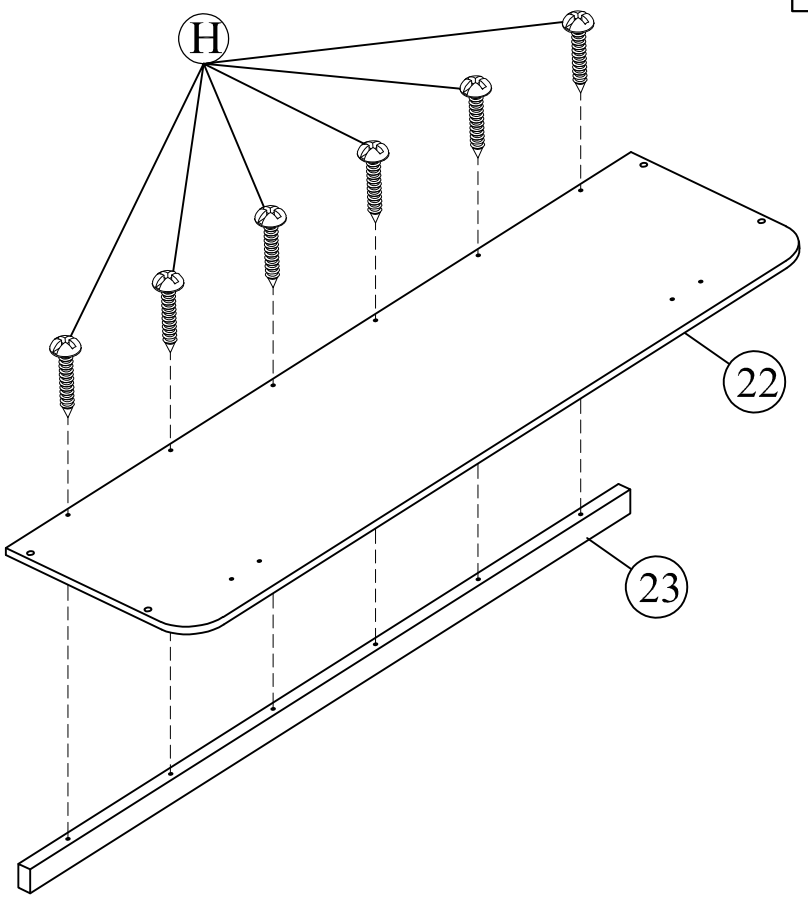

STEP 2:

H		2pcs

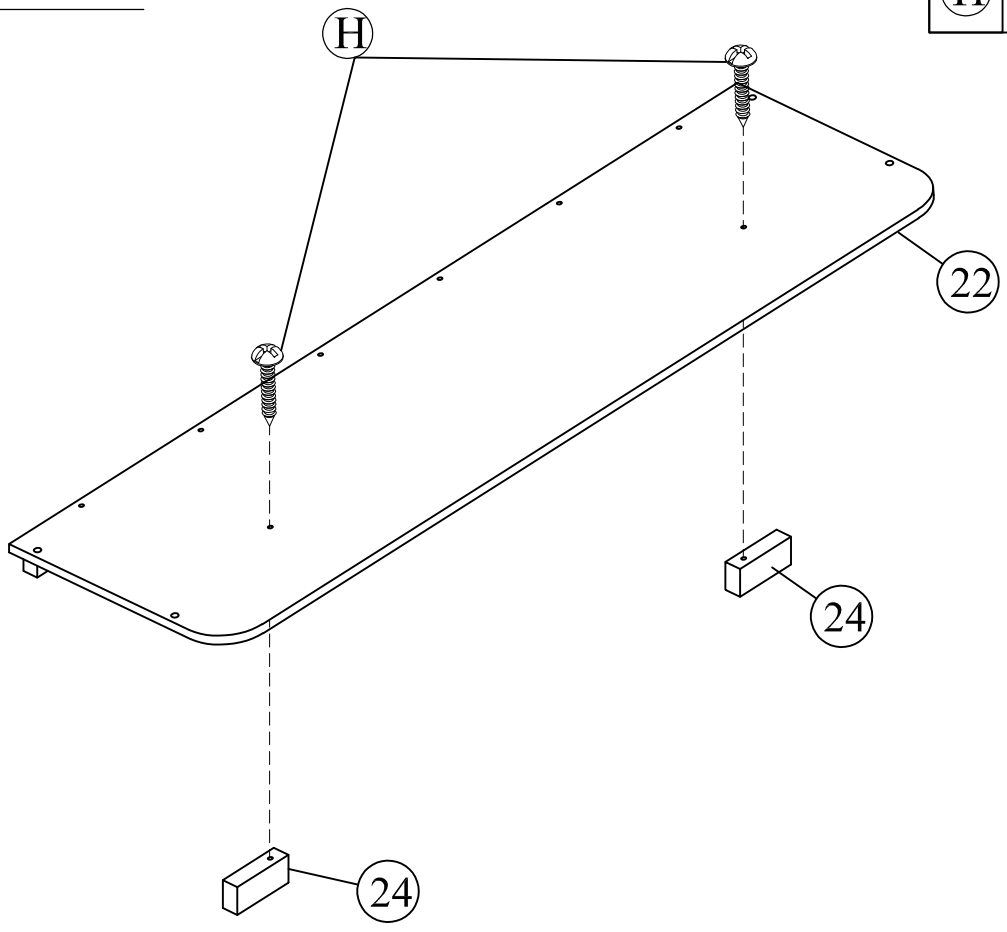

STEP 3:

G		4pcs

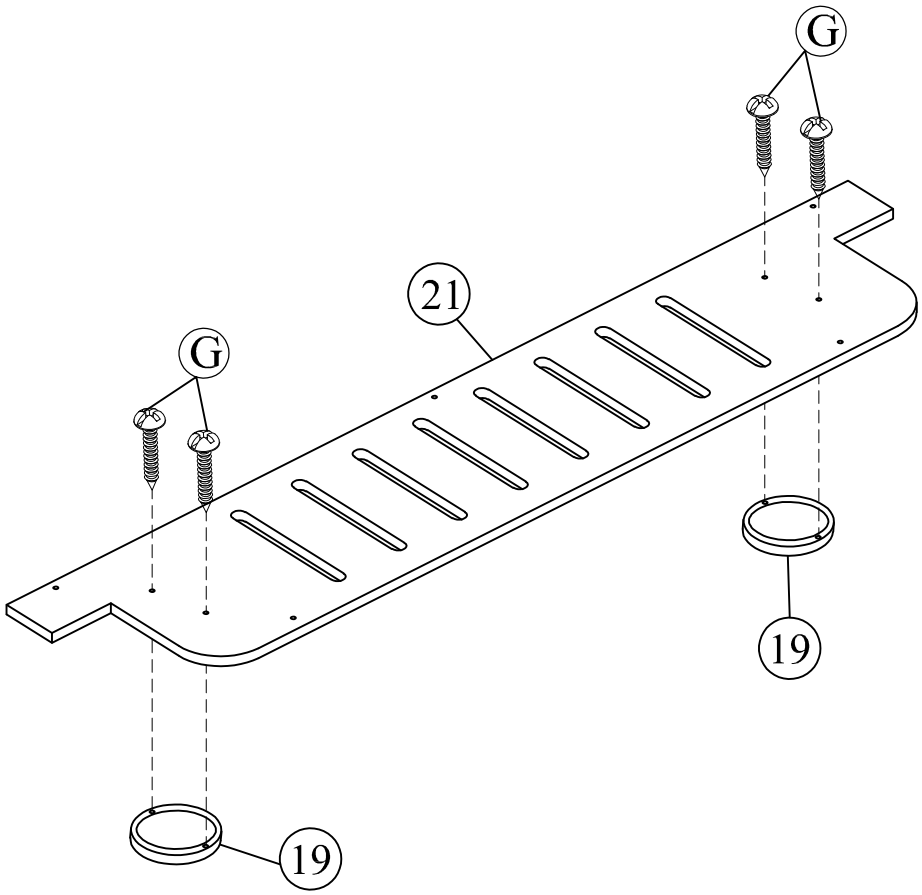

STEP 4:

H		5pcs

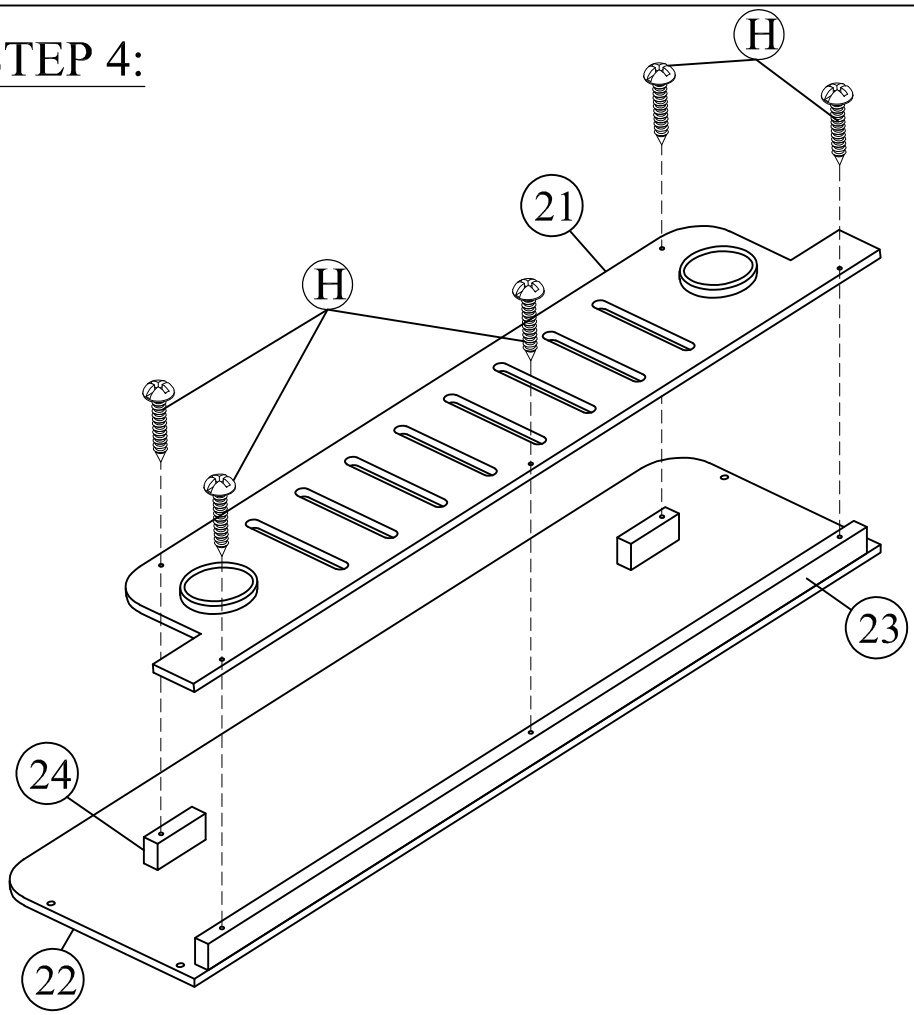

STEP 5:

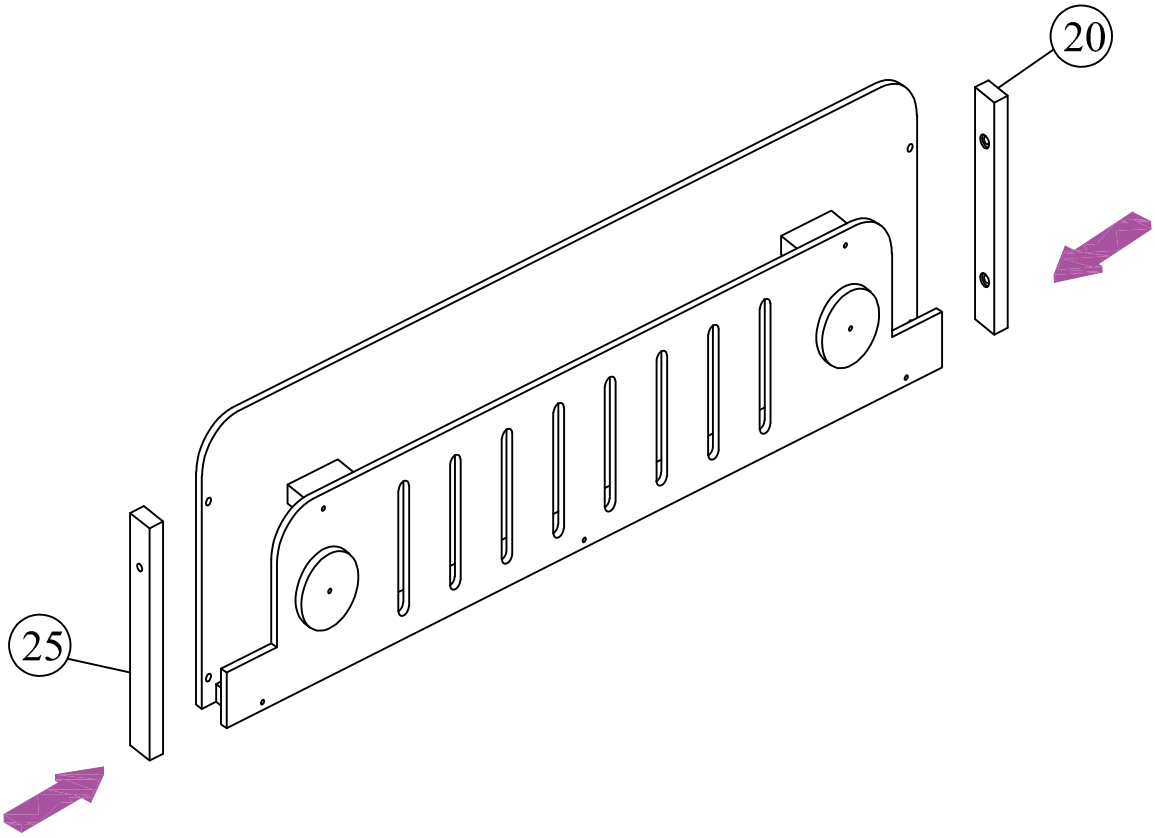

STEP 6:

L	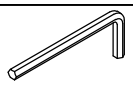	1pc
D		4pcs

STEP 7:

L	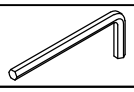	1pc
F		8pcs
O		8pcs

STEP 8:

L	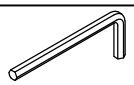	1pc
F		8pcs
O		8pcs

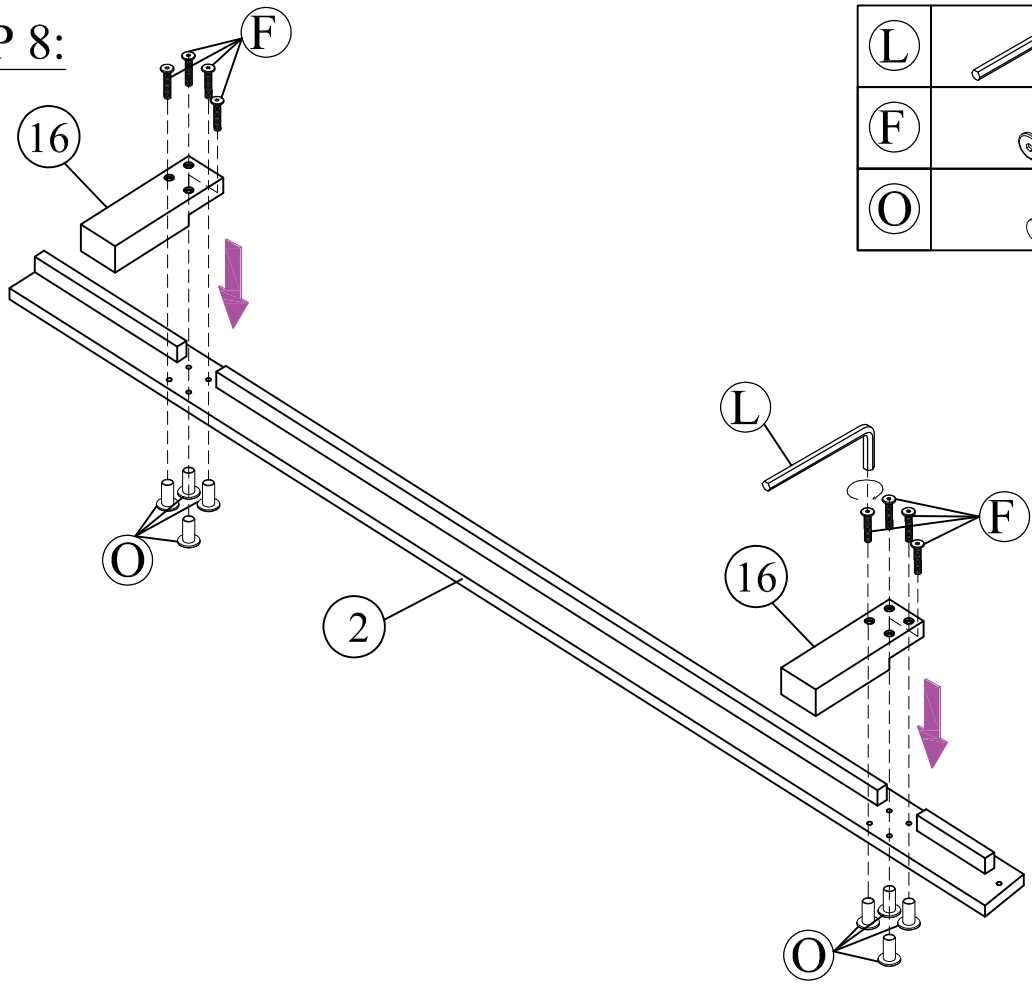

STEP 9:

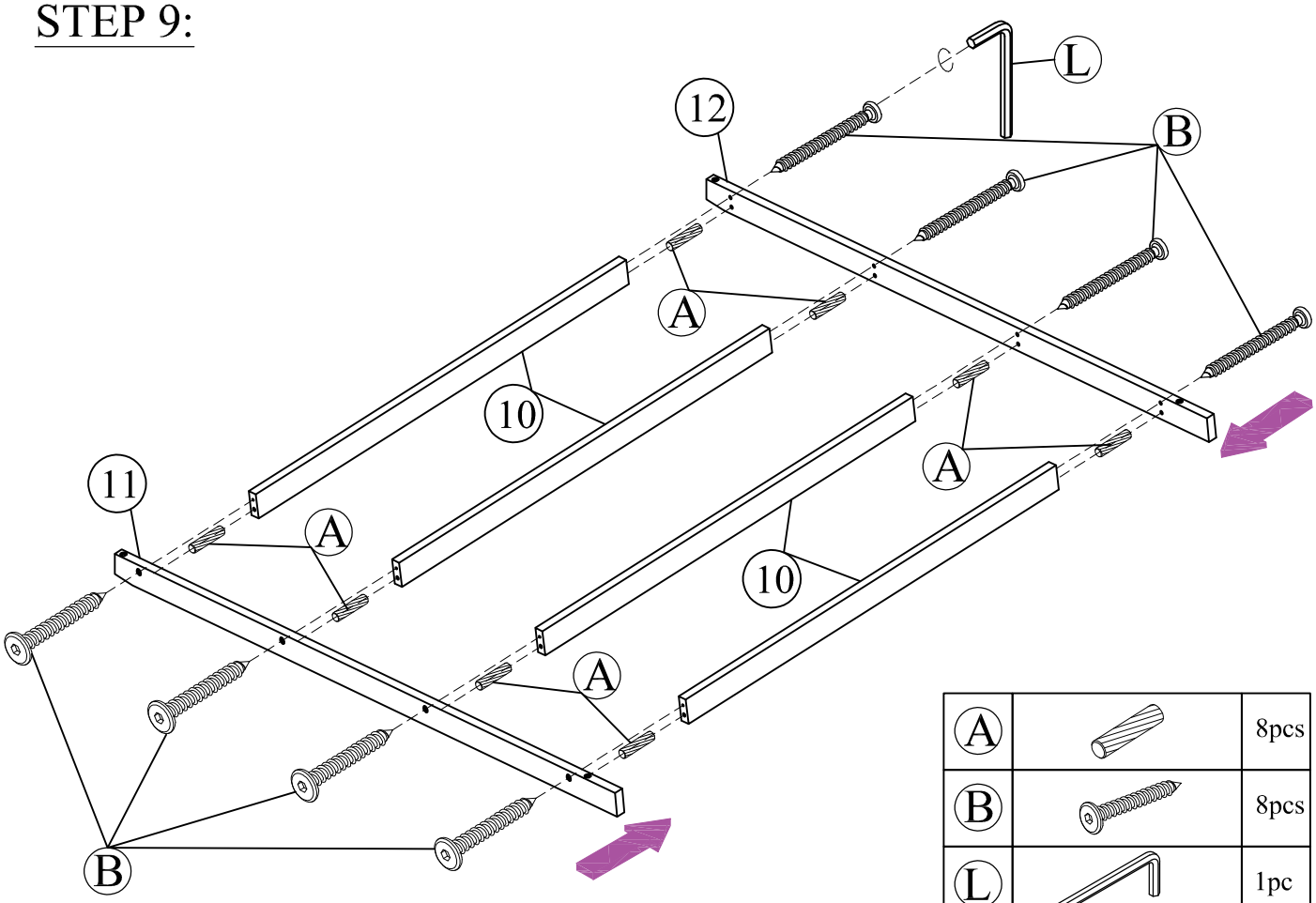

A		8pcs
B		8pcs
L		1pc

STEP 10:

L		1pc
E		2pcs

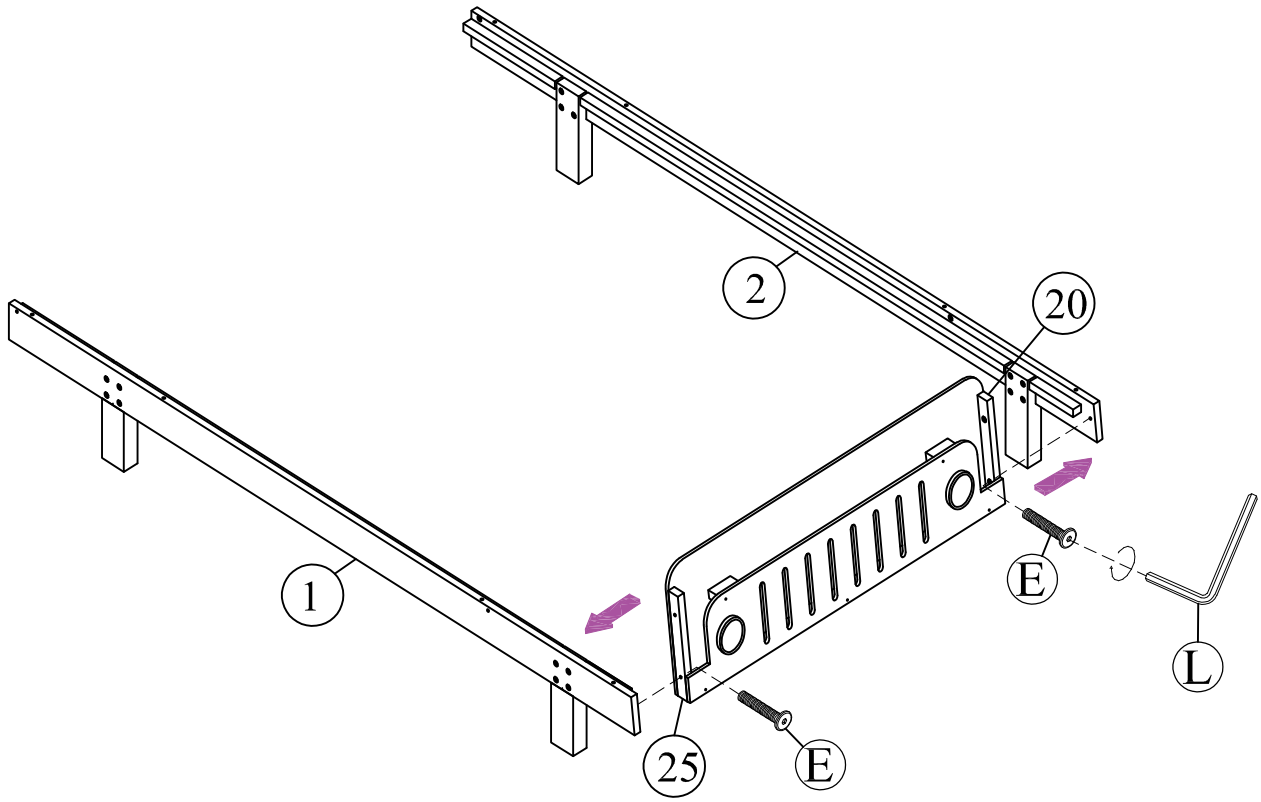

STEP 11:

A		8pcs

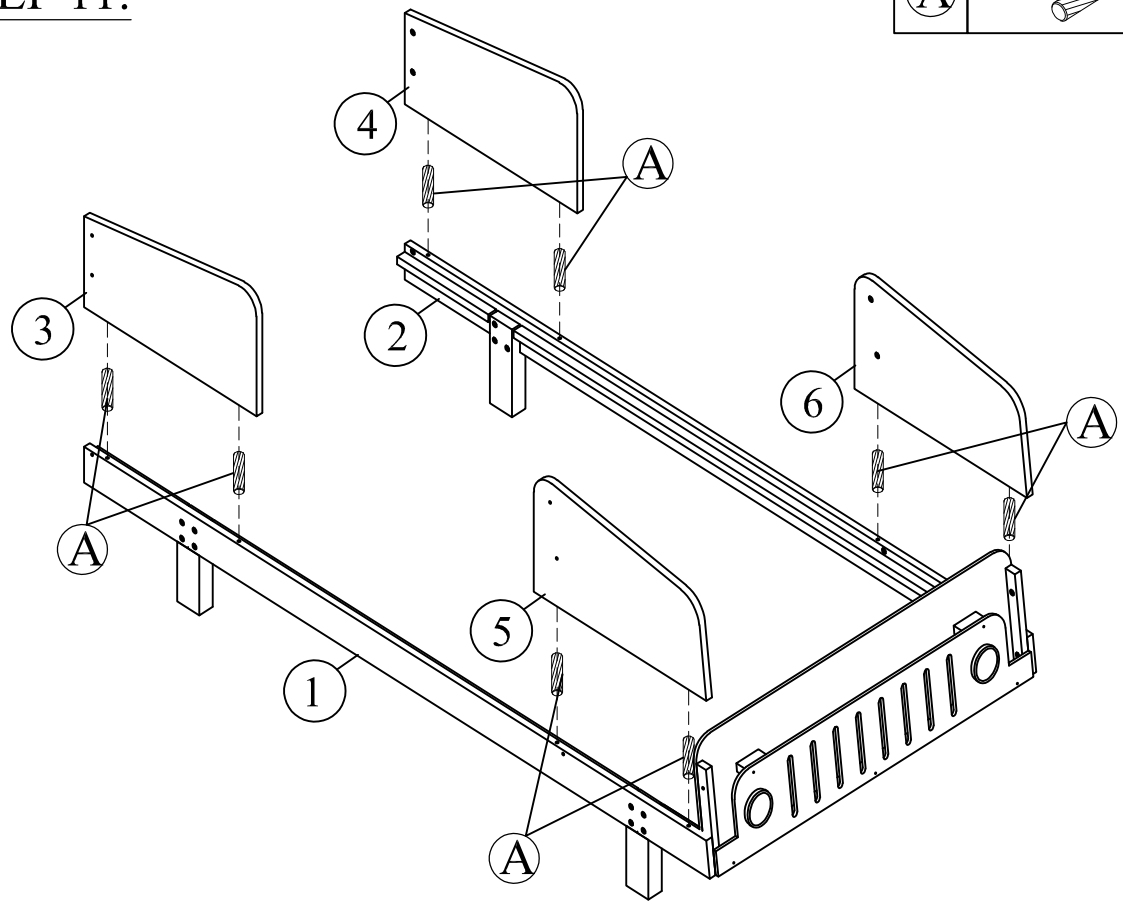

STEP 12:

L	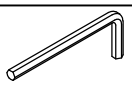	1pc
E		14pcs
O		12pcs

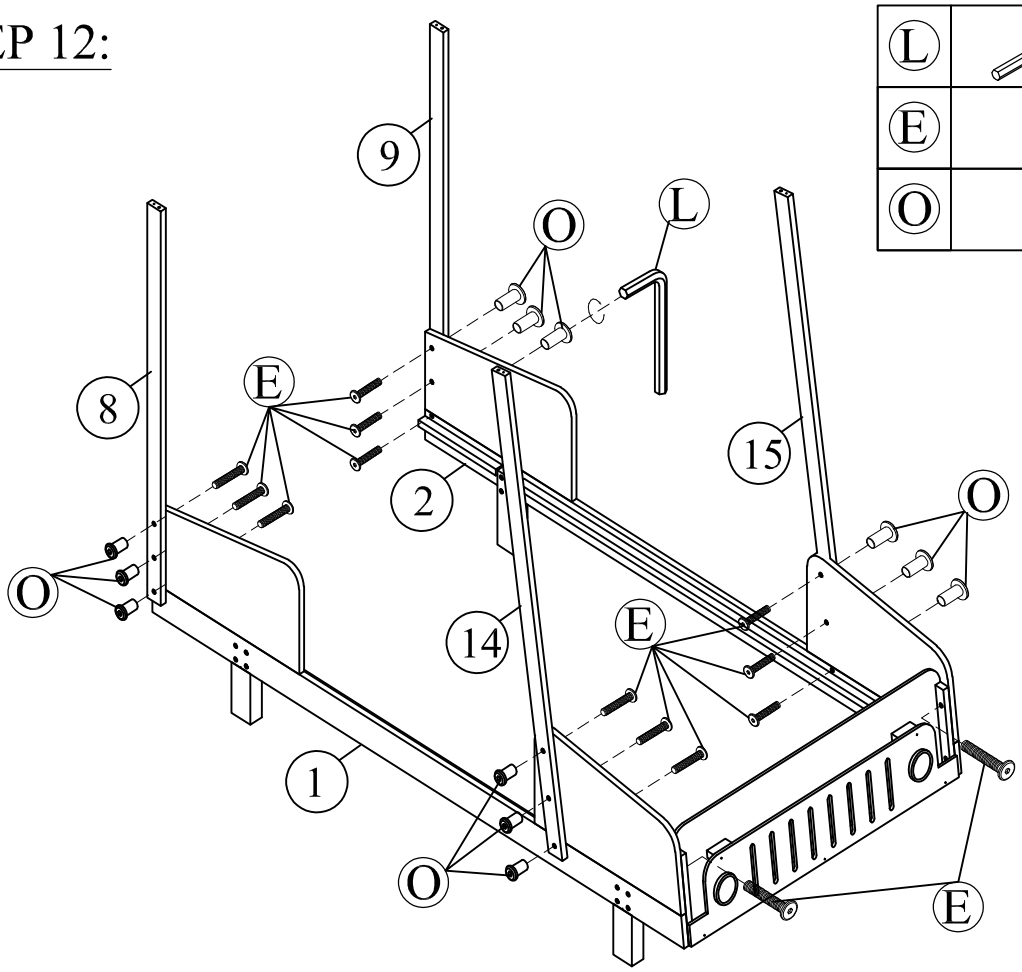

STEP 13:

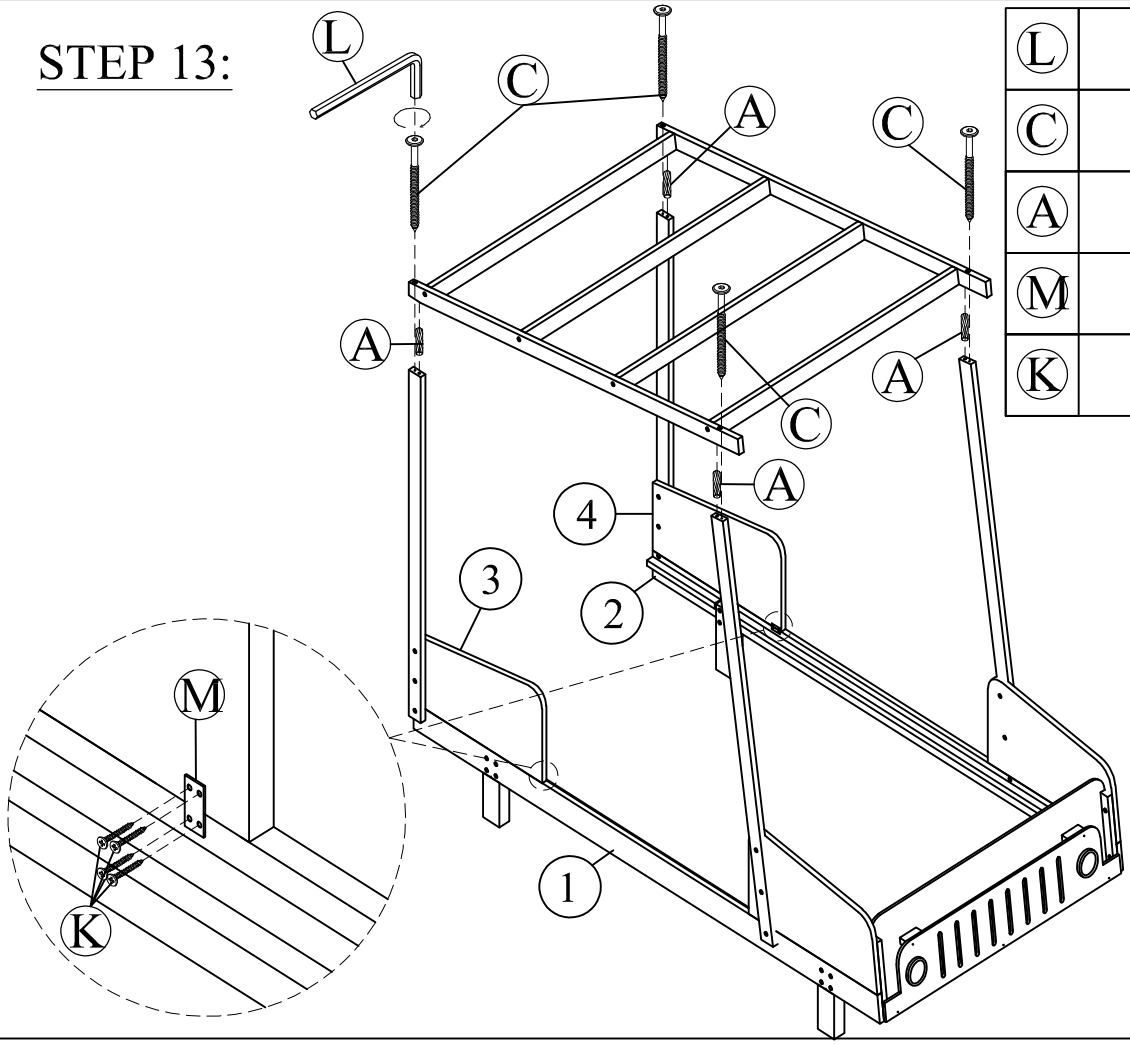

L		1pc
C		4pcs
A		4pcs
M		2pcs
K		8pcs

STEP 14:

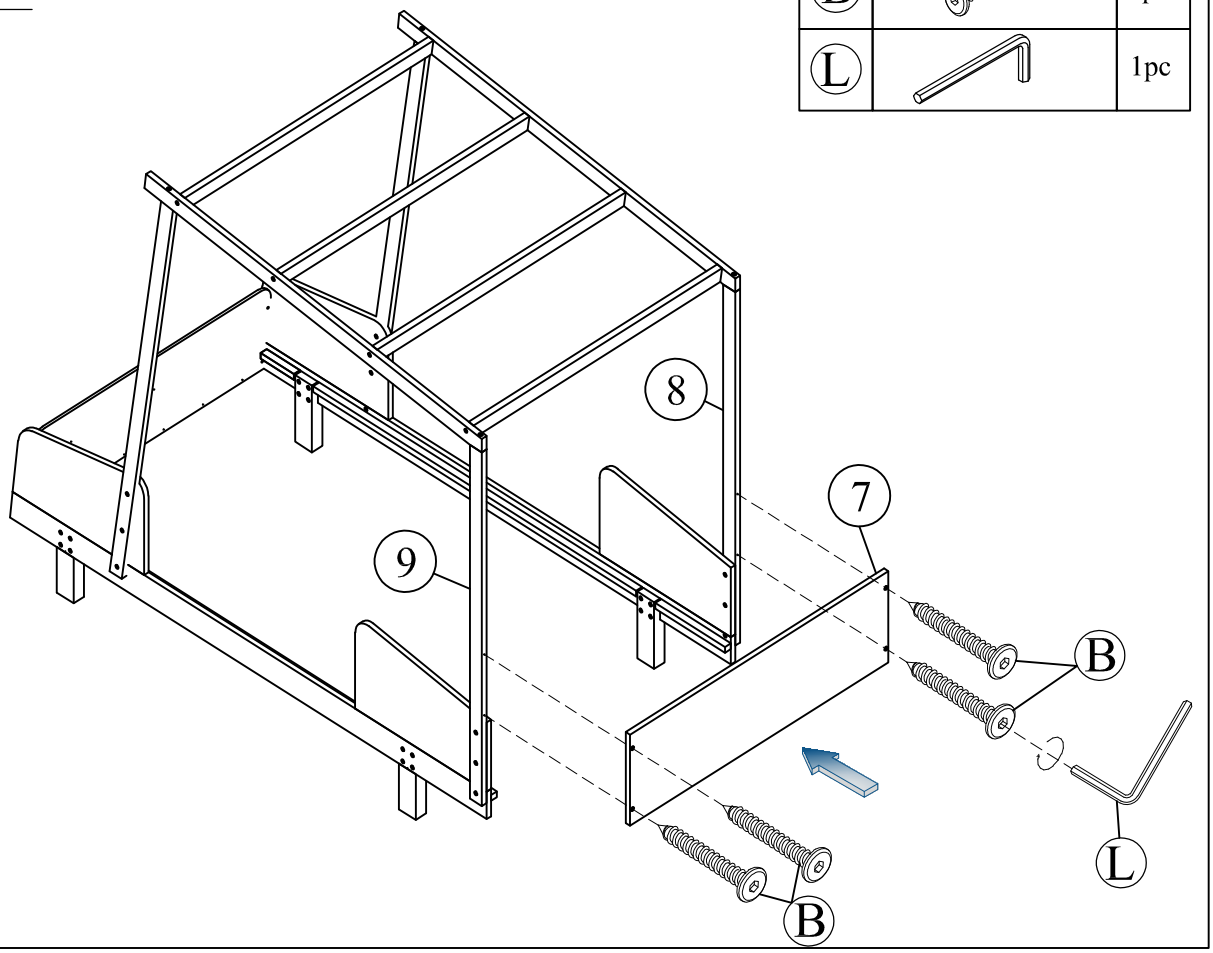

B		4pcs
L		1pc

STEP 15:

I		4pcs

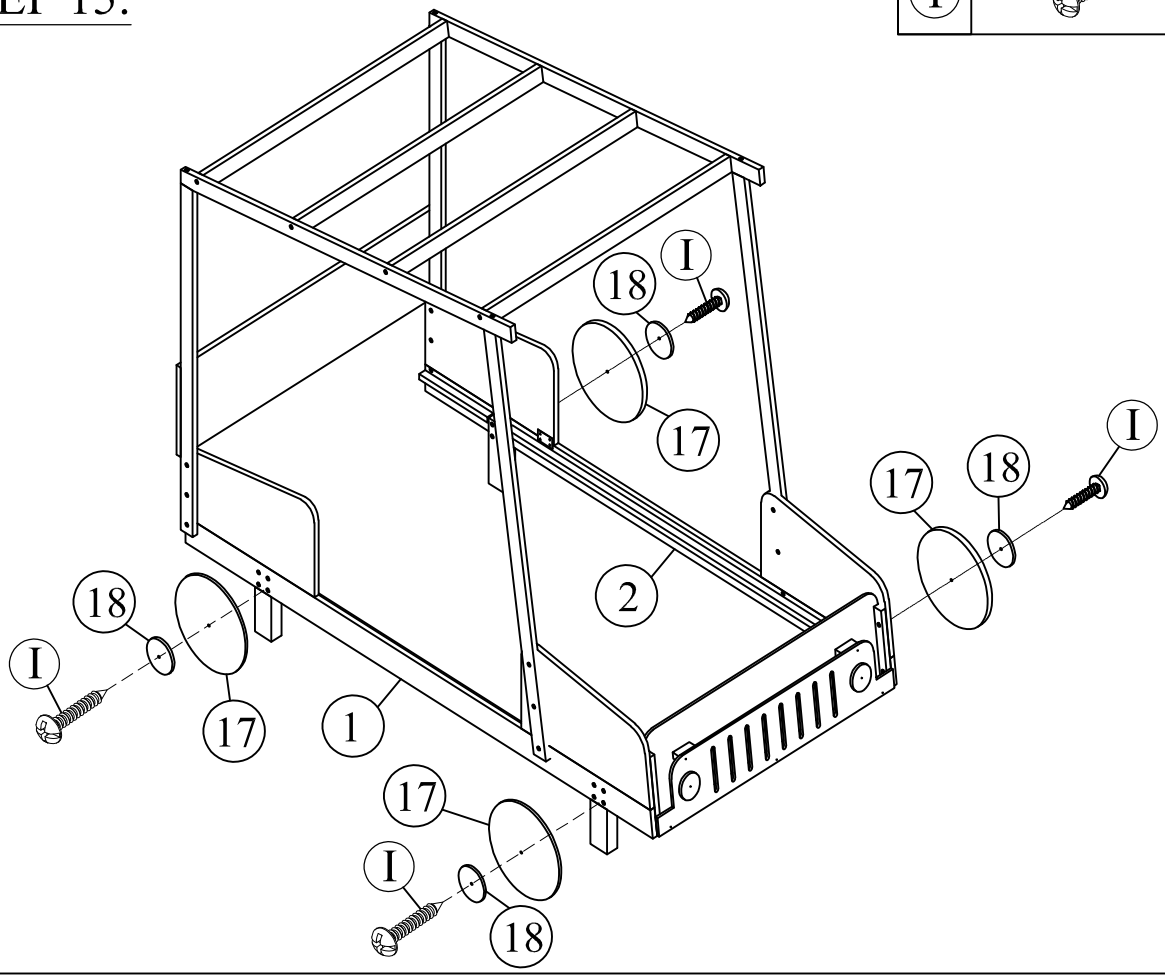

STEP 16:

L	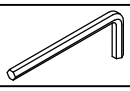	1pc
J		20pcs
E		4pcs

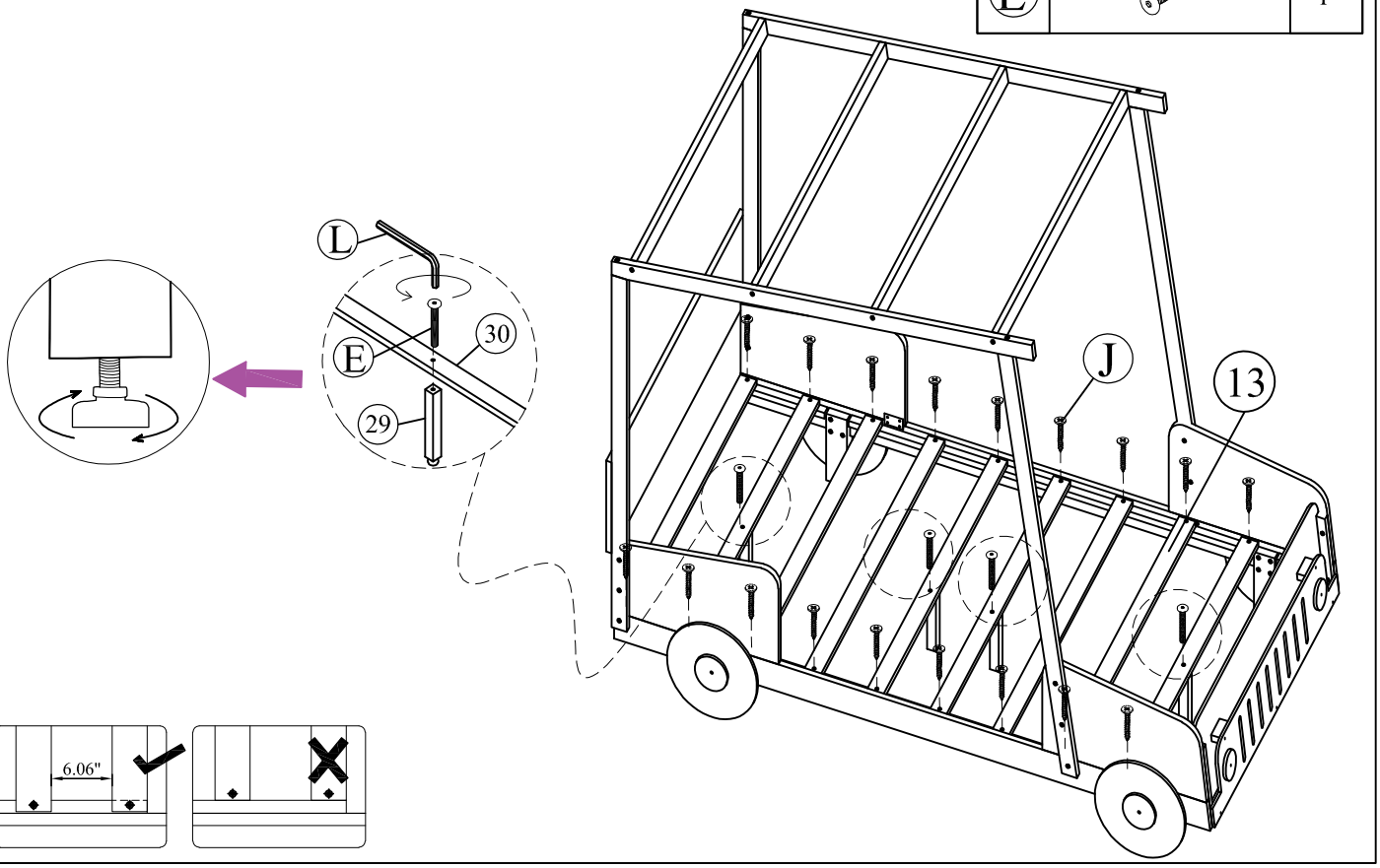

STEP 17:

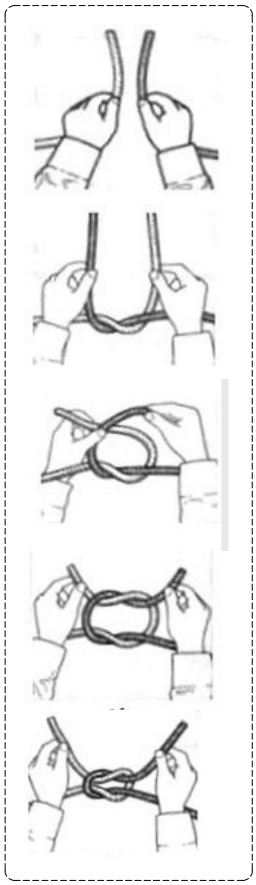

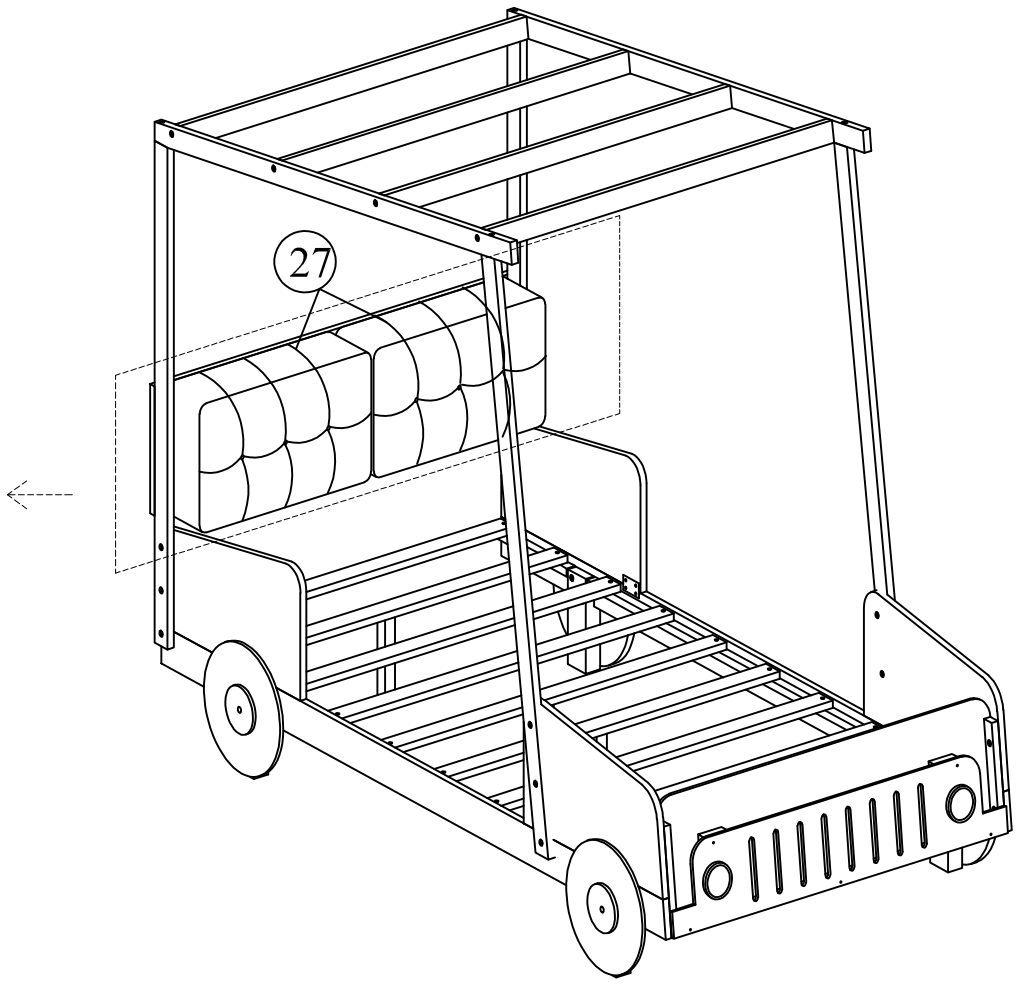

STEP 18:

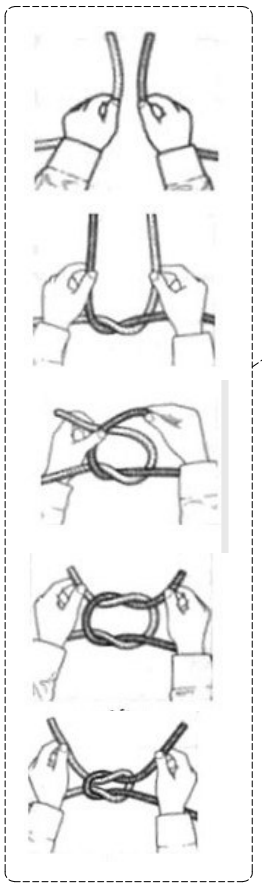

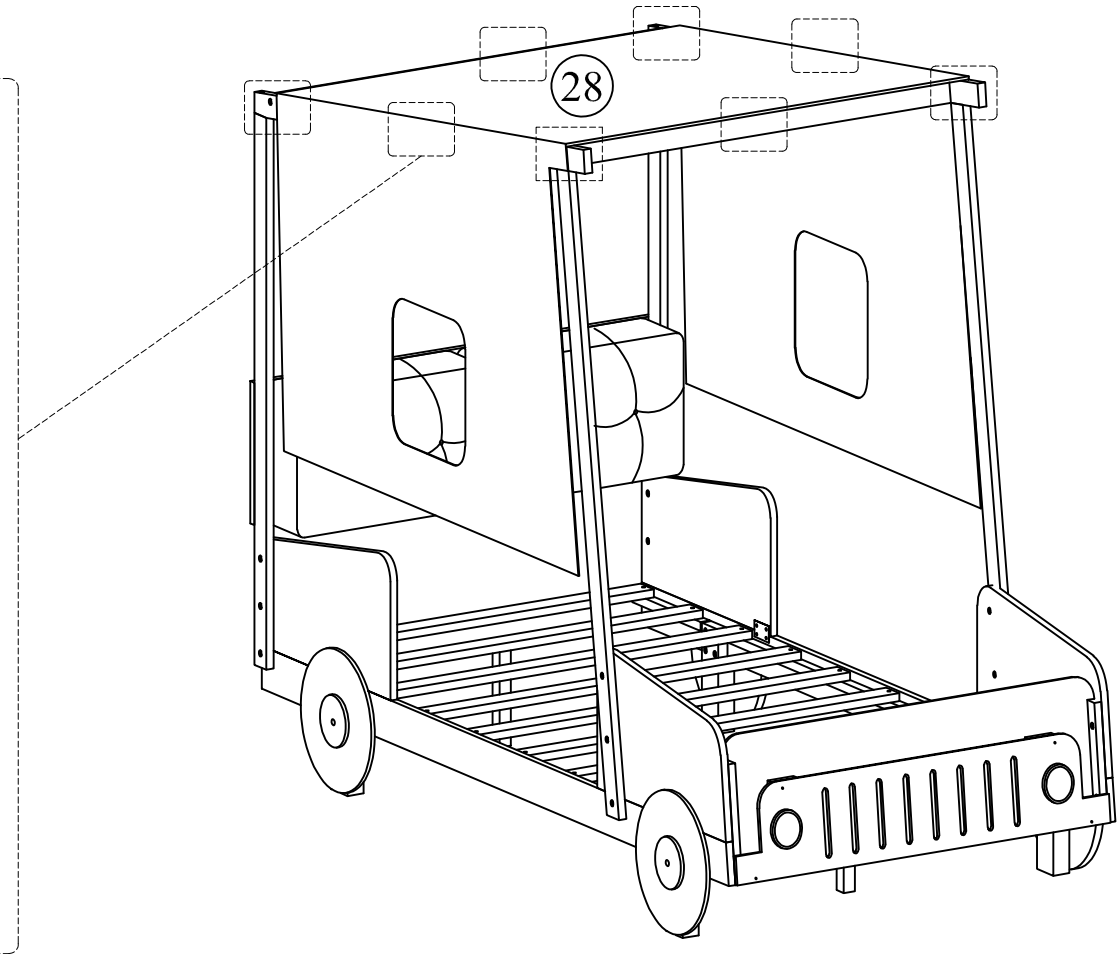

STEP 19:

STEP 19 -1:
Peel of the rubber,stick it on the underside of the lamp.

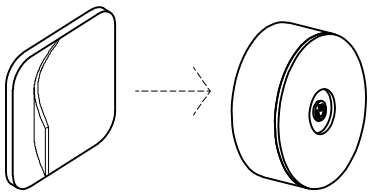

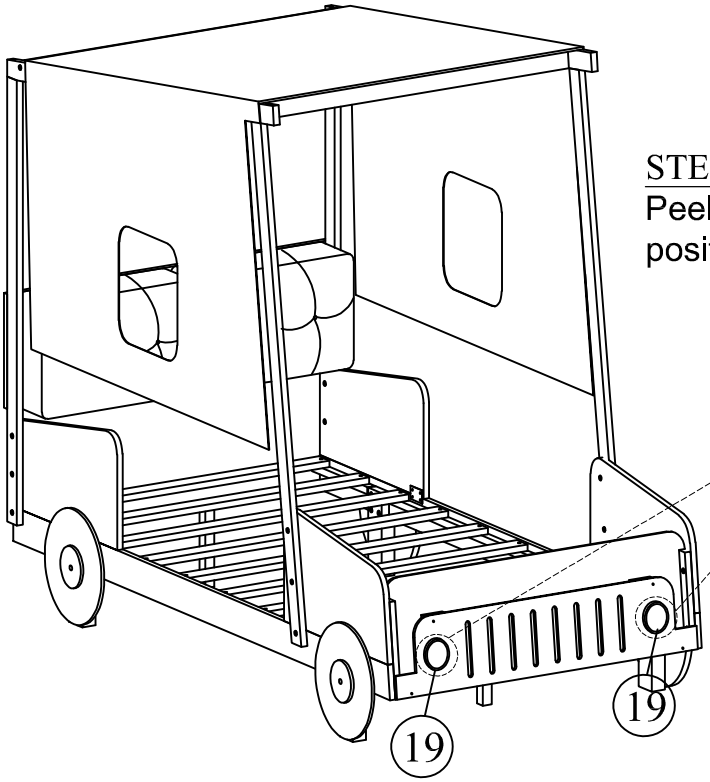

STEP 19 -2:
Peel of the rubber,paste in position number 19.

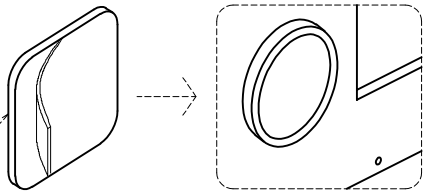

STEP 19 -3:
Stick the light in the position (number 19) with a magnet.

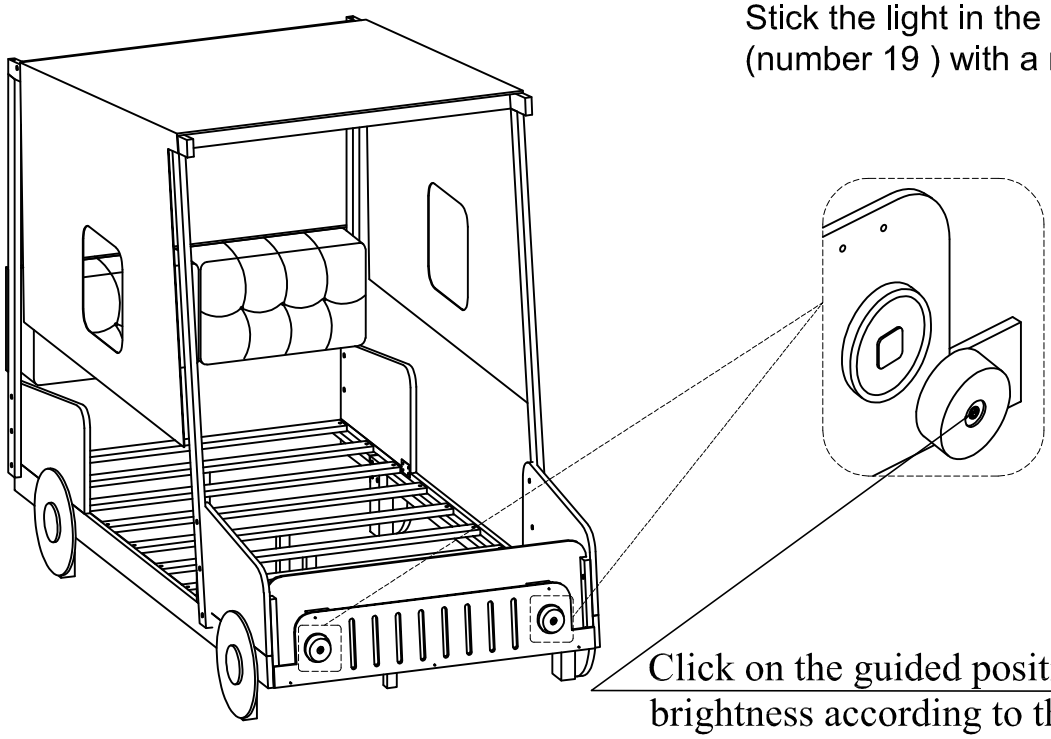

Click on the guided position, adjust the brightness according to the user's discretion.

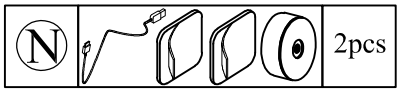

Final:

