FEATURES

- Inset construction with UV coated plywood cabinet interior
- 2" Frame
- Full height doors with softclose Blum® 110° hinges
- Satin varnish finish
- Hardware size 2 3/4" center to center
- Top and faucet sold separately
- Plumbing rough in area cut-out
- Made in the US

MATERIAL

- Solid wood, combination core veneers and medium density fiber board.
- Wood is a living material, and its beauty is enhanced by natural variations in grain, color, and pattern.
- No two pieces of wood are exactly the same, and the color will change with age, temperature, and exposure to light.
- The nature of wood grain can cause variations in stain depth. Our expert craftsmen apply paints and stains in a specific sequence to eliminate these variations.

TECHNICAL DRAWINGS

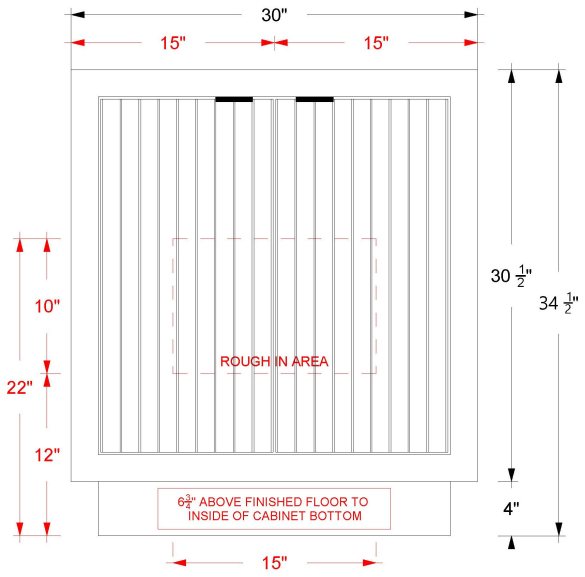

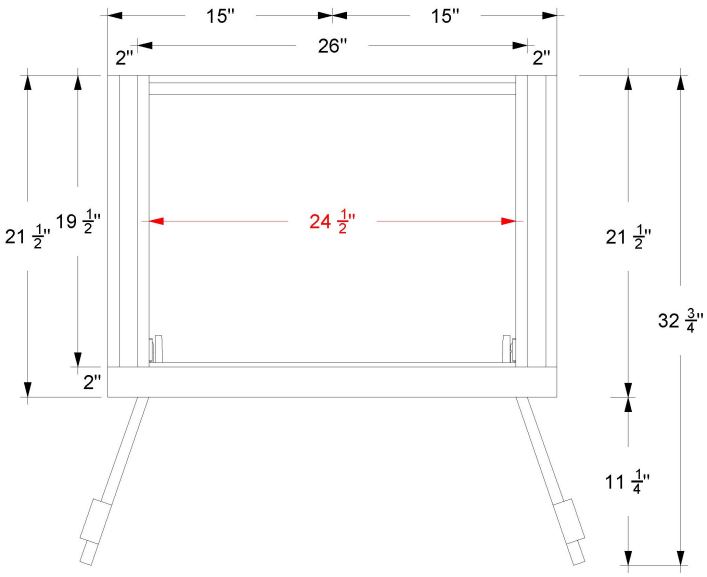

Vanderloc® reserves the right to make revisions without notice to product specifications. All product dimensions are nominal. For the most current specification sheet, visit www.vanderloc.com.

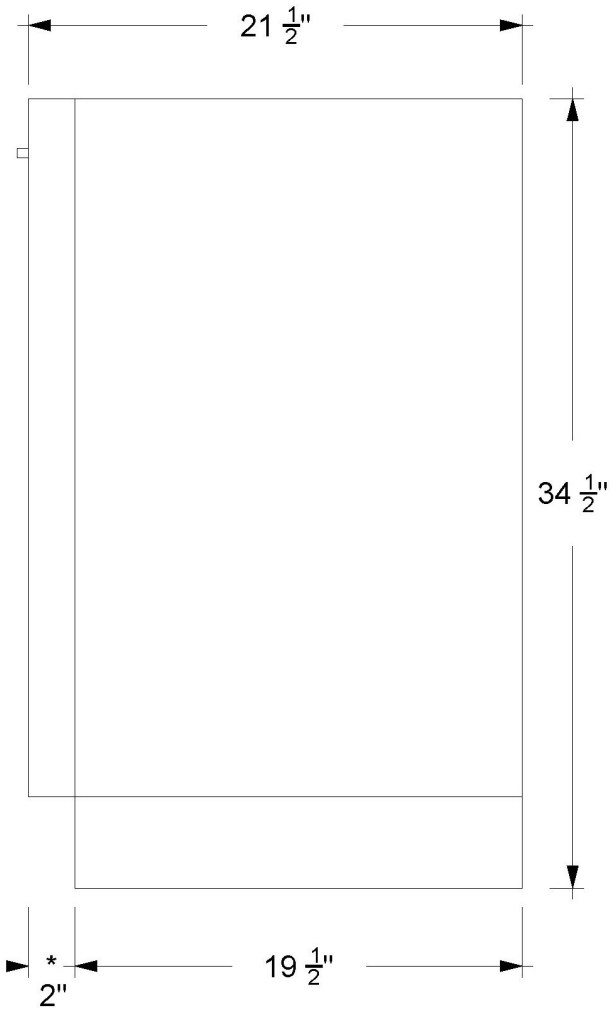

Vanderloc® reserves the right to make revisions without notice to product specifications. All product dimensions are nominal. For the most current specification sheet, visit www.vanderloc.com.