JAMIE YOUNG Co

Finley Small Fluted Nightstand - Brown Sugar Oak

20FINL-SNSBR

PLEASE FOLLOW THE INSTRUCTIONS LISTED BELOW:

IMPORTANT SAFETY INSTRUCTIONS
TOOLS NEEDED:
-Level
-Pencil
-Tape Measure
-Screwdriver
Assembly requires 2 or more people.
NOTE:
When unpacking, lay parts on a padded surface such as packaging provided. Be sure to locate all hardware before throwing away any packaging.

PARTS INCLUDED

A	**Anti Tip-Kit (B)**
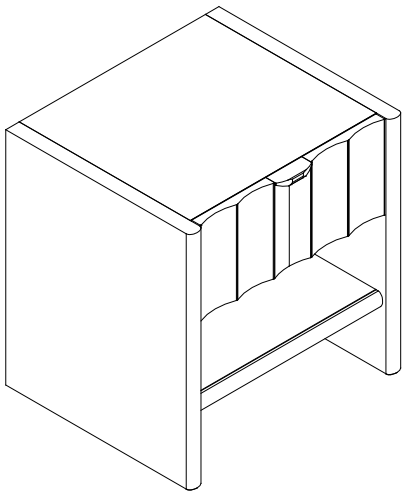	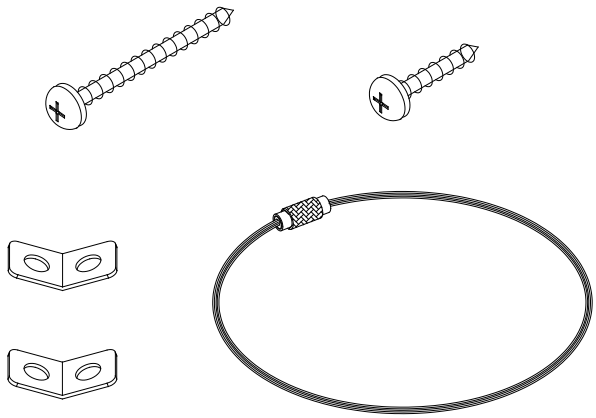
1pc	**1 set**

ASSEMBLY INSTRUCTIONS

Step 1: Leveling Adjustment
Adjust the leveling feet to ensure the cabinet stands evenly on the floor. This is essential for maintaining structural integrity and a clean visual alignment. See Figure 1

Step 2: Anti-Tip Safety Installation
Position the cabinet in its final location, then install the anti-tip kit by securing it to the wall. This step enhances safety and long-term stability. See Figure 2

Step 3: Drawer Replacement Instructions. See Figure 3

ASSEMBLY DIAGRAMS

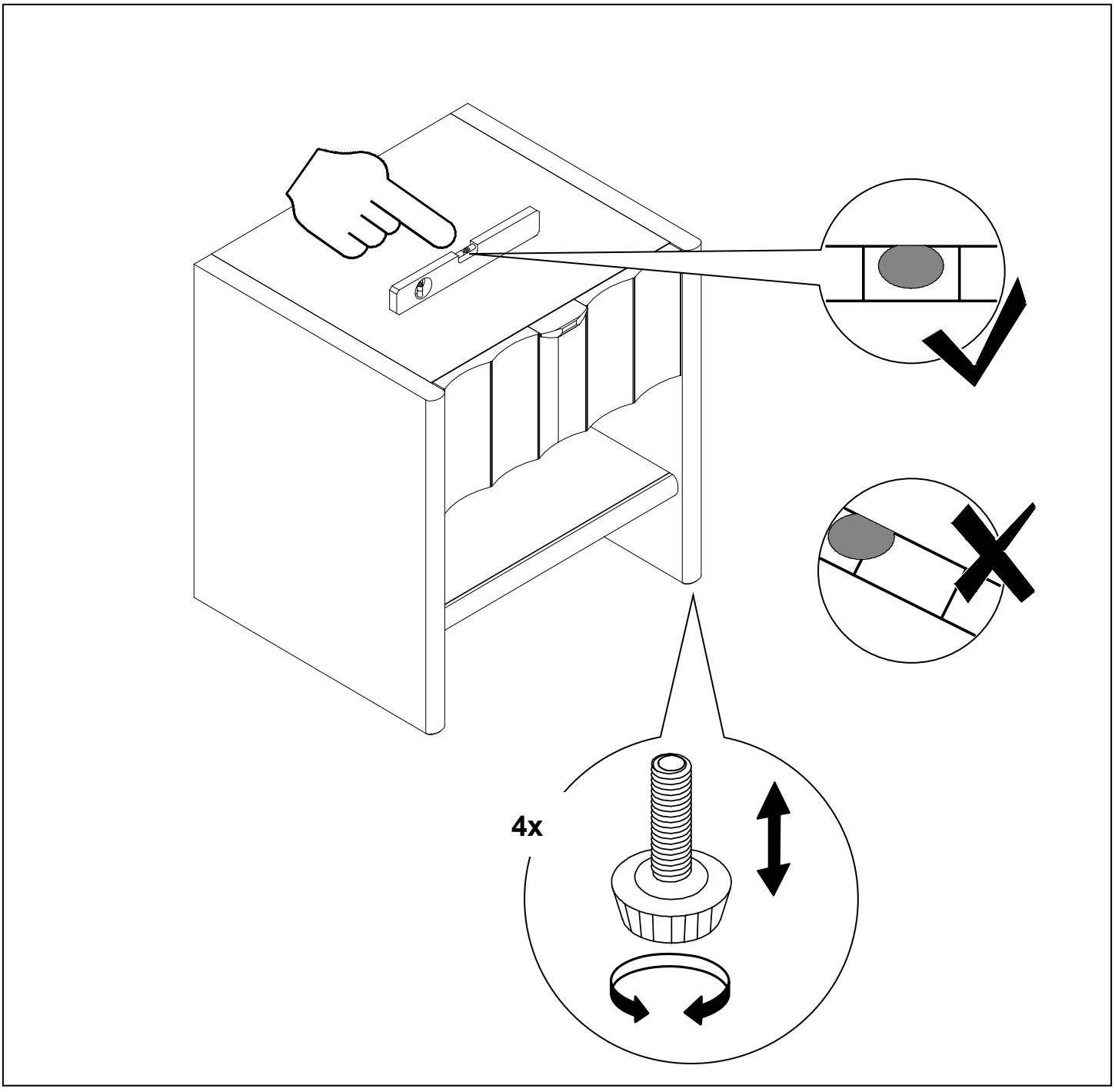

Figure 1

ASSEMBLY DIAGRAMS

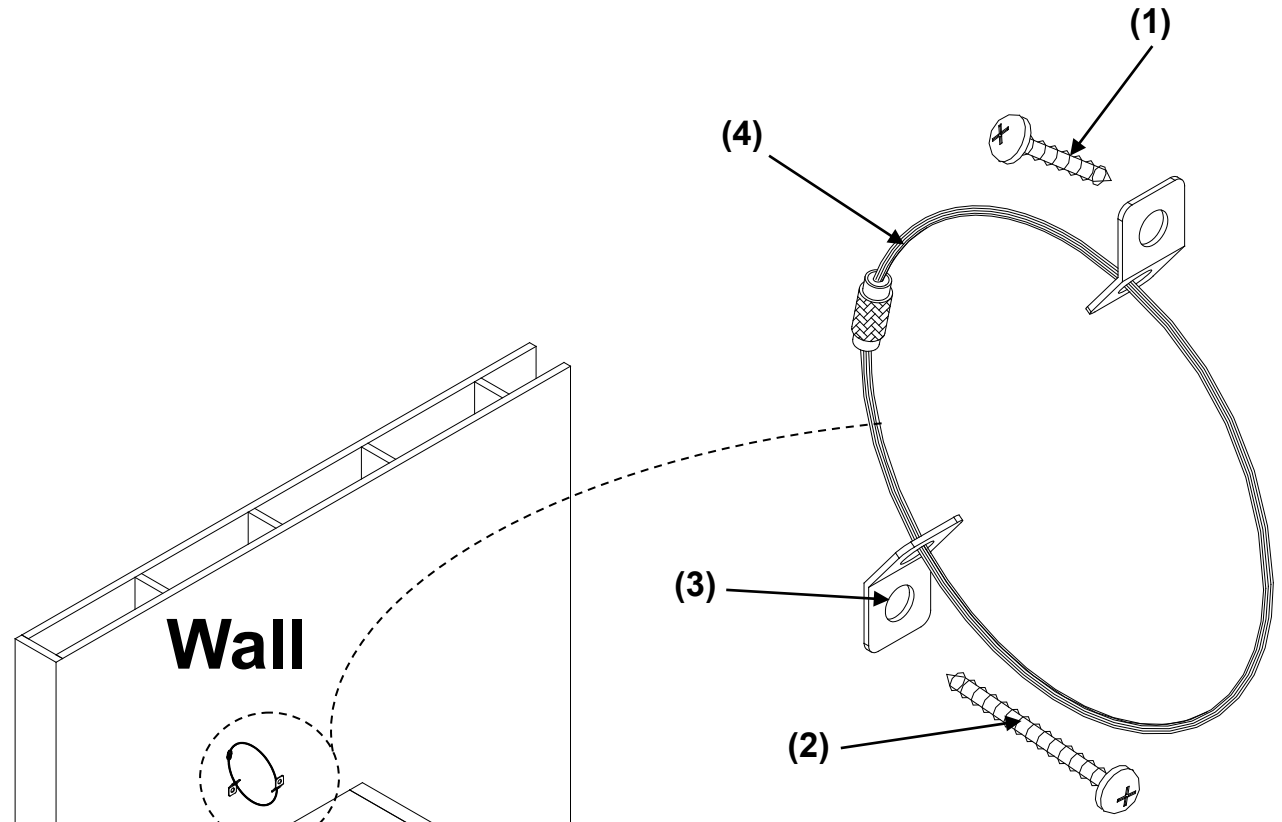

HARDWARE LIST			
No	SKETCH	DESCRIPTION	QTY
1		Small Screw	1pcs
2	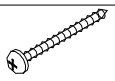	Larger Screw	1pcs
3		Brackets	2pcs
4		Retention Belt	1pcs

Figure 2

ASSEMBLY DIAGRAMS

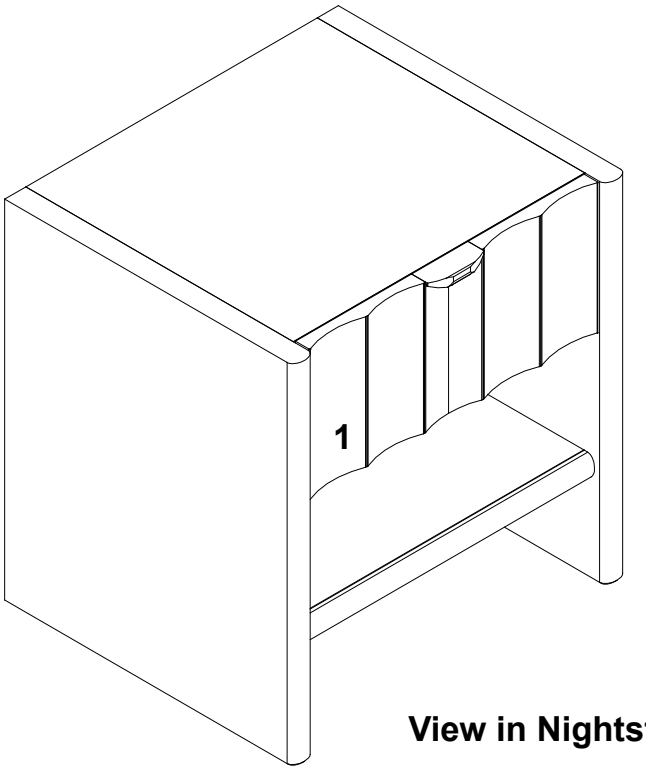

View in Nightstand

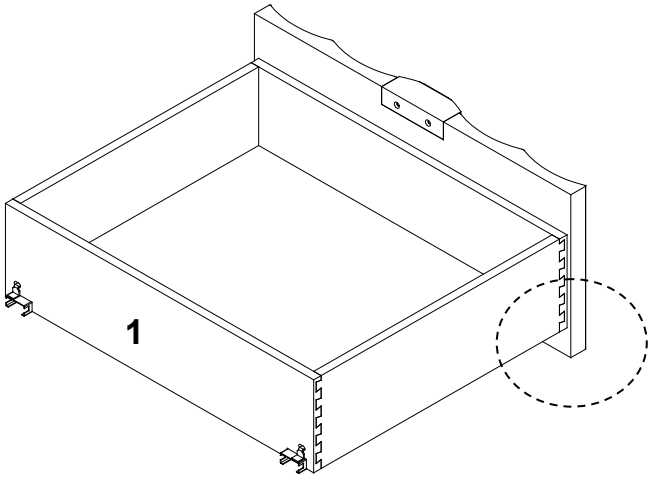

View back drawer

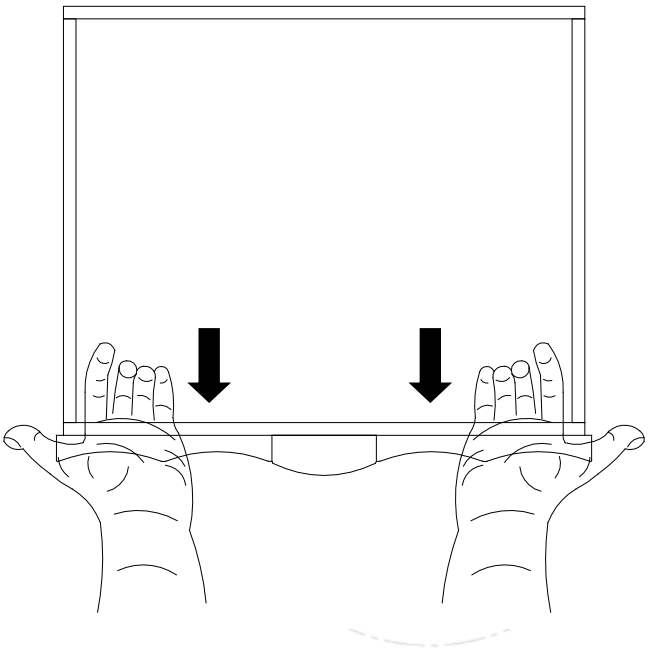

Figure 3

Thank you for purchasing this product !

www.jamieyoung.com

SCAN ME

For more information, please scan the QR code to watch the instruction video.