INSTALLATION INSTRUCTIONS

DUAL MOUNT SERIES

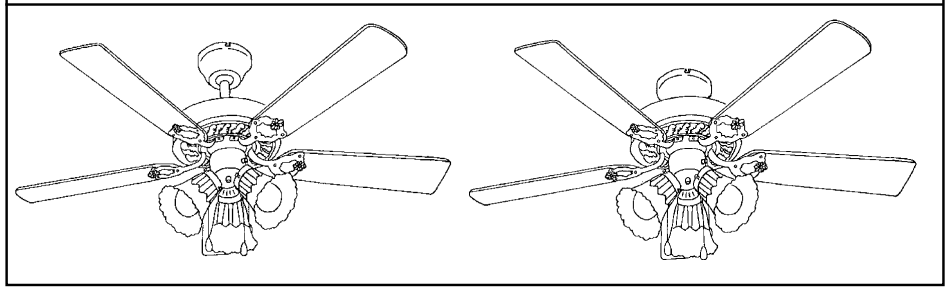

"INSTRUCTIONS PERTAINING TO RISK OF FIRE OR INJURY TO PERSONS"
"READ ALL INSTRUCTIONS"

"IMPORTANT SAFETY INSTRUCTIONS"
"SAVE THESE INSTRUCTIONS"

TOOLS AND MATERIALS REQUIRED

- Philips Screw Driver
- Blade Screw Driver
- Step Ladder
- Wire Cutters
- Wiring supplies as required by electrical code.

5 YEAR LIMITED WARRANTY

"THANK YOU" for purchasing a product. It is our policy to furnish you with high quality products at a fair price. With proper installation your fan should provide you with years of money saving comfort.

This fan is guaranteed to be free from defects in workmanship and material for a period of five (5) years from date of purchase. Within the first (1) year from date of purchase any defective product should be returned to your **RETAIL OUTLET** along with proof of purchase. For the balance of the warranty, four (4) years, the **MOTOR WINDINGS ONLY** shall be free of defects. We will correct such defects or replace the motor assembly at our option if the product is returned, **FREIGHT PREPAID**, to . The returned fan must be accompanied by ***your proof of purchase and a cheque for $20.00*** for handling and labour charges.

All costs of removing and re-installing the product are **YOUR RESPONSIBILITY** Damage to any part as such by accident, misuse, improper installation or by affixing any accessories **IS NOT** covered by this warranty. As a result of varying climatic conditions in our area this warranty does not cover any changes in finishes, including rusting, pitting, corroding, tarnishing or peeling.

WARRANTY VOID: In cases of alteration, abuse, installation not in accordance with instructions or REMOVAL of the C.S.A. Sticker.

SAFETY PRECAUTIONS

1. Turn off power at main electrical service box before starting installation.
2. Electrical connections must comply with local code ordinances, national electrical codes, CEC, NEC and ANSI/NFPA 70.
3. Make sure the installation site you choose allows the fan blades to rotate freely without any obstructions.
4. When mounting the fan on a ceiling outlet box, Use an approved (CSA for Canada and UL for U.S.) ceiling fan box marked "**FOR FAN SUPPORT**". Ensure the outlet box is securely installed in place such that it is able to support at least the fan weight.
5. WARNING: To reduce the risk of fire, electric shock, or personal injury, mount fan only to an outlet box marked acceptable for fan support and use mounting screws provided with the outlet box. Most outlet boxes commonly used for the support of lighting fixtures are not acceptable for fan support and may need to be replaced. Consult a qualified electrician if in doubt.
6. Total Fan Weight For Reference: 36"approximate 6.0 kgs(13.23lbs), 42"approximate 7.5 kgs(16.53lbs), 48"approximate 8.0 kgs(17.63lbs), 52"approximate 9.0 kgs(19.84lbs).

WARNING

- To reduce the risk of fire or electrical shock, remote control for optional remote control adaptability.
- To reduce the risk of personal injury **DO NOT** bend the blade brackets when installing the brackets, balancing the blades or cleaning the fan. Also, **DO NOT** insert foreign objects in between rotating fan blades.
- Mount with the lowest moving parts at least 2.15 Meters (7 Feet) above floor or grade level.
- **DO NOT** operate reversing switch while fan blades are in motion. Fan must be turned off and rotating blades stopped, reverse chain pulled, the speed chain pulled again to start in the opposite direction.

INSTRUCTIONS

A ceiling fan has a completely internal switching system for total operation by way of pull chains. On a fan/light combination, three pull chains will exist: One for light, on and off. The second is for fan speeds. This will be marked (SPEED) on the fan switch housing.

1st Pull will give fan High Speed
2nd Pull will give fan Medium Speed
3rd Pull will give fan Low Speed
4th Pull will Shut Fan Off

The third pull chain is for Forward/Reverse#(***Note: Some models come with a slide switch instead of a pull chain***). This setting would usually be changed twice per year. Downdraft in summer to create a wind chill to give a cooling effect. Updraft in winter to circulate the hot stratified air off the ceiling and back down to the floor without creating a wind chill.

TROUBLESHOOTING

TROUBLE	SUGGESTIONS
1. Fan will not start	- Check wiring connections to fan. - Check fuses and circuit breakers. - Check wiring connections in switch housing. ***CAUTION: Turn power off for last two items.***
2. Fan sounds noisy	- Check to make sure that all screws in motor housing are snug. - Check to make sure that blade bracket screws are tight. - Check to make sure that marrettes in switch housing are not rattling against wall of switch housing. - If fan has a light kit make sure switch housing screws and set screws are tight. - Some fan motors are sensitive to signals from solid state variable controls. If solid state controller is used, change to an alternative control. (See a representative for a list of available controls.) - Allow a 24 hour break in period to eliminate most noises.
3. Fan wobbles or shakes excessively.	- Check that all blades are screwed firmly into blade brackets. - Check that blade brackets are secured firmly to motor. - Check distance from tip of blades to ceiling. Gently bend up or down the blade brackets until all distances are the same. - Check distance between blade tip to blade tip. All measurements should be equal. Loosen blade screws and position blade until even then re-tighten. - Check that the downrod hemisphere notch is engaged in canopy. - Check to make sure that jam screws in downrod are tightened. - Make sure canopy and mounting bracket are tightened securely to wooden joist. - Make sure warpage has not occurred in wooden blades. If so, contact the customer service department for replacement parts.

A DETACHABLE LIGHT KITS

- Remove 2 clips (optional) and nuts. Loosen third clip (optional) and nut.
- Place proper bulb type and wattage into the fixture.

- Loosen thumb screws on light.
- Place shade on light and secure with thumb screws, finger tight.
- Connect tassels to switches feeding chains through nuts on light kit.

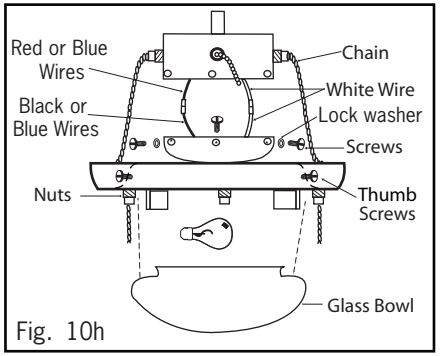

Fig. 10h

- Align slots in glass bowl with nipples on fixture. Slide glass into loosened clip. Assemble the other 2 clips to the fixture and then tighten all three nuts in place.
- Connect tassels to switches feeding chains through nuts on light kit.

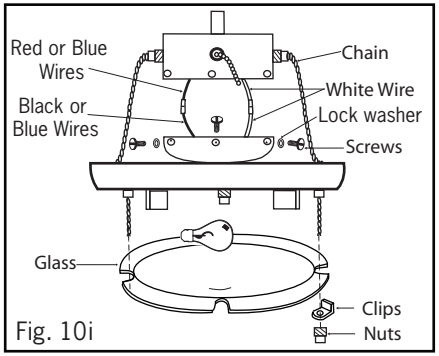

Fig. 10i

NOTE: Pull chain switches are available for some models.

B PERMANENTLY ATTACHED LIGHT

- Loosen thumb screws on light.
- Install proper wattage and type of bulb identified on light or shade.
- Place shade on light and secure with thumb screws, finger tight.

Fig. 10j

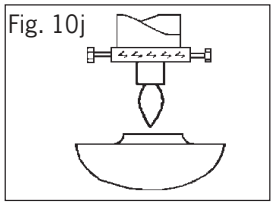

NOTE: Electrical diagrams are for reference only. Light kits that are not packed with the fan must be CSA/UL Listed and marked approval for use with the model fan you are installing. Switches must be CSA/UL General Use witches. Refer to the instructions packaged with the light kits and switches for proper assembly.

WARNING: Check all connections, set screws and screws are securely tightened before the next step.

ASSEMBLY DRAWING

1. Wooden Joist
2. Approved (CSA for Canada and UL for U.S.) ceiling fan box (not provided)
3. Ceiling
4. J-Hook
5. Rubber Gasket
6. Screws & Lock Washers (set of 4)
7. Mounting Bracket c/w Ground Wire
8. Outlet Box Screws (not provided)
9. Rubber Ring (optional)
10. Lock Pin
11. Hemisphere Jam Screw
12. Hemisphere
13. Upper Motor Housing Screws & Lock Washers (set of 3 or 4)
14. Downrod c/w Ground Wire
15. Ceiling Canopy
16. Rubber Bushing (optional)
17. Bolt
18. Motor Assembly
19. Jam Screws
20. Cotter Pin
21. Nut (optional)
22. Lock Washer (optional)
23. Flat Washer (optional)
24. Hex Nut
25. Flat Washer
26. Fibre Washer
27. Fibre Bracket Gasket
28. Blade
29. Blade Bracket
30. Lock Washer
31. Motor Screw
32. Blade Bracket Screws

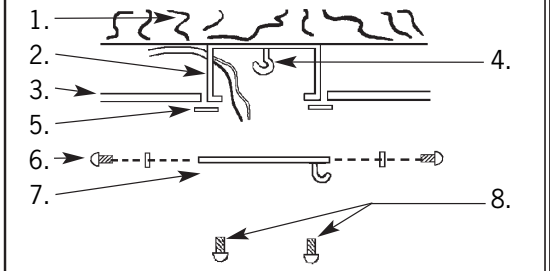

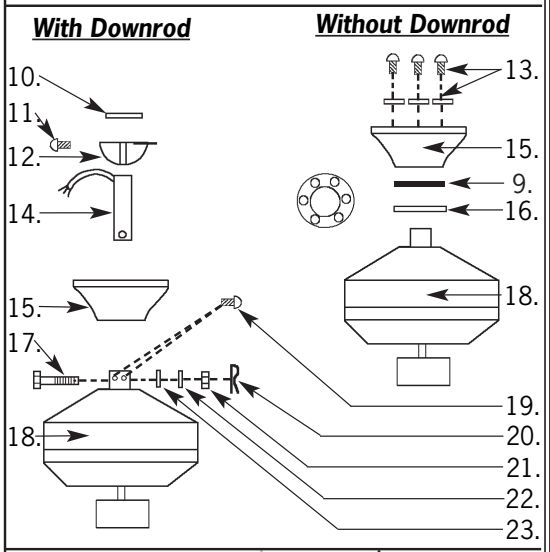

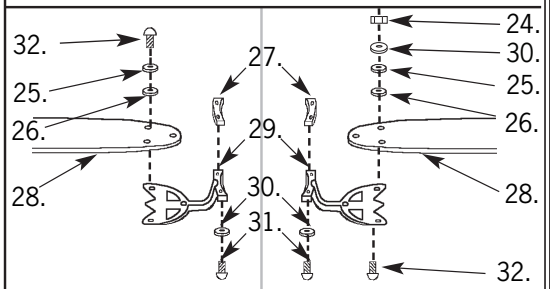

Cast Blade Brackets **Stamped Blade Brackets**

Fig. 1

INSTALLATION

NOTE: All set screws must be checked and retightened where necessary, before and after installation.

1. MOUNTING OPTION

A DOWNROD MOUNT

- Using a Philips screwdriver loosen the two upper jam screws on the yoke.
- Position downrod inside canopy.
- Route wires exiting yoke on motor through ceiling canopy and downrod.
- Position downrod/canopy into yoke and align holes in yoke and downrod.
- Insert bolt through hole in yoke and downrod. ***Be careful not to damage or cut the fan wires.***
- Tighten flat washer, lock washer, and nut and bolt (**not included on some models**). Secure with cotter pin through hole in the end of the bolt.
- Secure downrod in position by tightening upper jam screws.

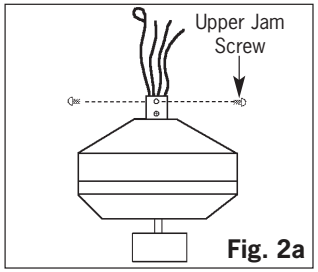

Fig. 2a

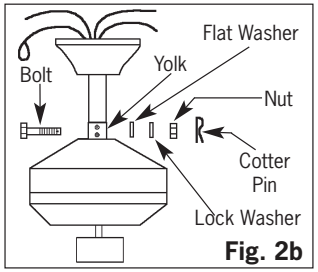

Fig. 2b

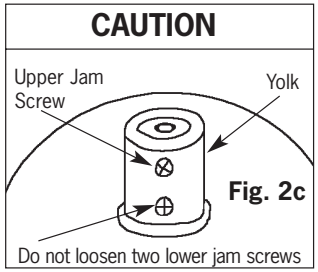

Fig. 2c

B FLUSH MOUNT

- Optional for some models -Remove rubber ring from canopy (see Fig. 2d)
- Remove the yoke screws and lockwashers which correspond to the holes in the canopy.
- Position canopy over the holes on motor and secure with the same screws and lockwashers removed in the previous step. Ensure to place the rubber bushing between the canopy and motor.

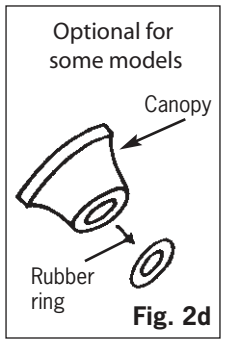

Fig. 2d

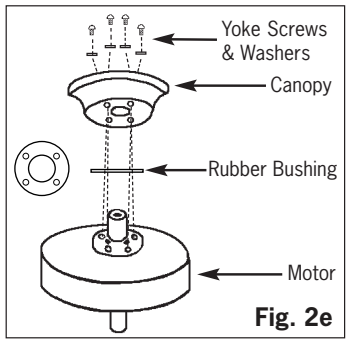

Fig. 2e

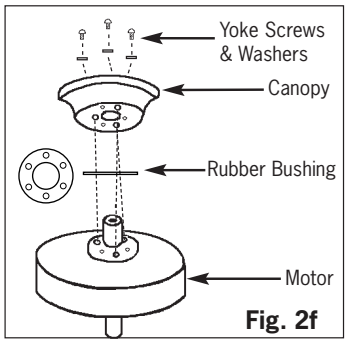

Fig. 2f

8. LIGHT KITS (Optional in some fans)

A DETACHABLE LIGHT KITS

- Remove light kit screws and washers.
- Connect polarized connectors of light kit to corresponding connectors found in switch housing.

WARNING: BE SURE TO TURN OFF POWER BEFORE INSTALLING

- Carefully tuck electrical wires back into switch housing, align light kit with switch housing and secure with three light kit screws and washers.

- Place shades on light kit and secure with either screws, finger tight, spinner nut or push and turn for pop-off style shades. (See Fig.10a, Fig.10b, Fig.10c,10d, Fig.10e).
- Install proper wattage and type of bulb identified on light kit or shade.

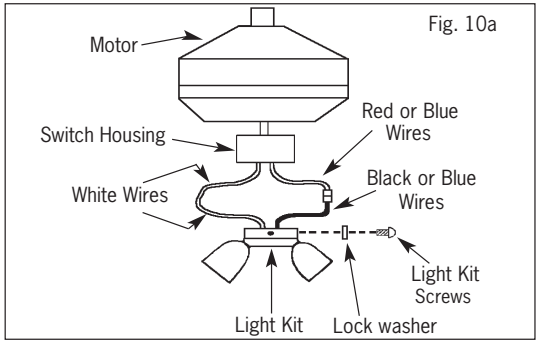

Fig. 10a

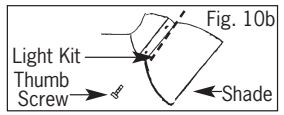

Fig. 10b

or

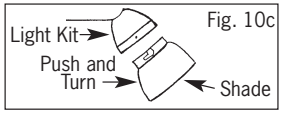

Fig. 10c

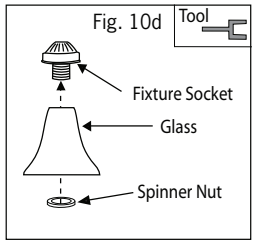

Fig. 10d

- Install proper wattage and type of bulb identified on light housing or shade.
- Place glass on light housing and secure (See Fig. 10f, Fig.10g).

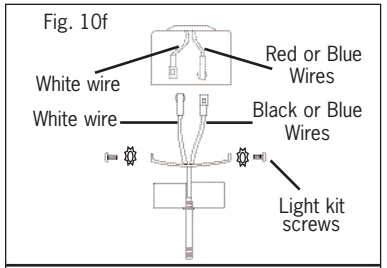

Fig. 10f

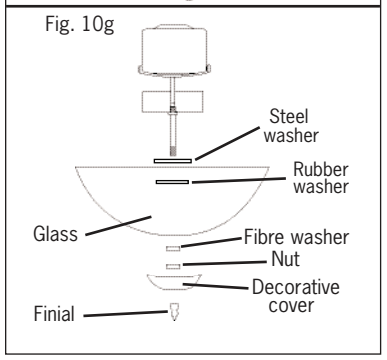

Fig. 10g

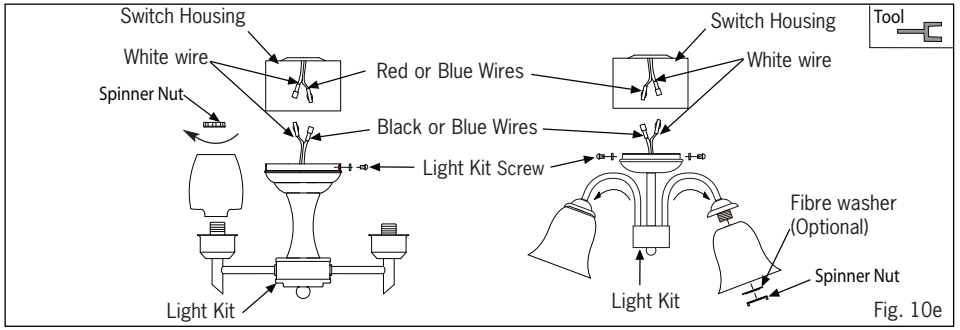

Fig. 10e

6. MOUNT BLADE BRACKETS TO BLADES

Cast Blade Brackets

- Take out hardware package.
- Place blade bracket screw through flat washer, fibre washer and blade.
- Align with corresponding hole in blade bracket.
- Repeat with (2) remaining screws and tighten.

Stamped Blade Brackets

- Take out hardware package.
- Place blade bracket screw through hole in blade bracket.
- Align with corresponding hole in blade bracket.
- Place fibre washer and flat washer over blade bracket screw and secure with hex nut.
- Repeat with (2) remaining screws and tighten.

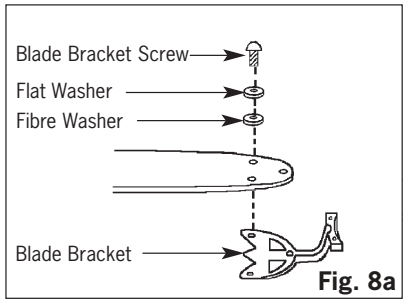

Fig. 8a

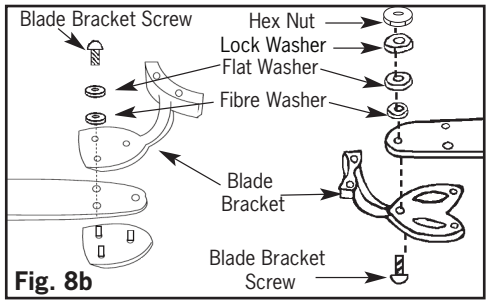

Fig. 8b

7. MOUNTING BLADES TO MOTOR

- Take out hardware containing motor screws, lock washers and gaskets.
- Place lock washers over motor screws, position motor screws in blade brackets, place fibre bracket gaskets over screws and secure to motor. Make sure all screws are tightened securely.

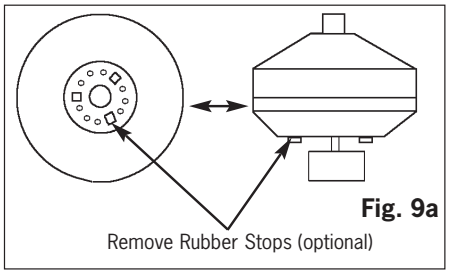

Fig. 9a

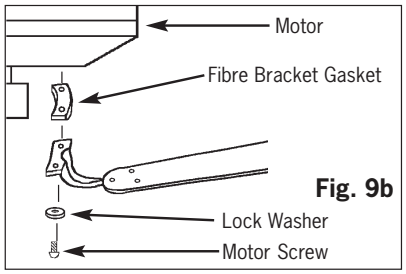

Fig. 9b

NOTE: Fan comes with three rubber stops (optional on some models) on motor for shipping purposes only. Remove stops before running motor or installing blades to motor.

2. INSTALL MOUNTING BRACKET

WARNING: To Reduce The Risk Of Fire, Electric Shock, Or Personal Injury, Mount To UL/CSA Listed Outlet Box Marked Acceptable for Fan Support And Use Mounting Screws Provided With The Outlet Box.

- Install J-Hook through centre of outlet box and into the wooden joist.
- Secure mounting bracket and rubber gaskets to outlet box.
- Hang the safety cable onto the J-hook.
- Hang fan on temporary hook and install safety cable.

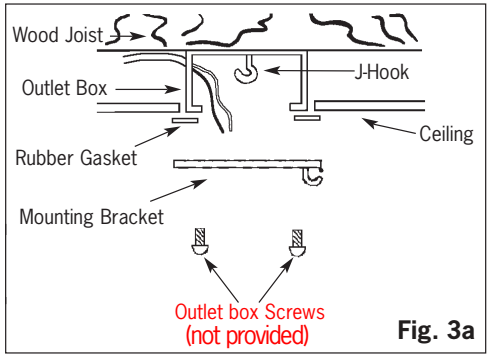

Fig. 3a

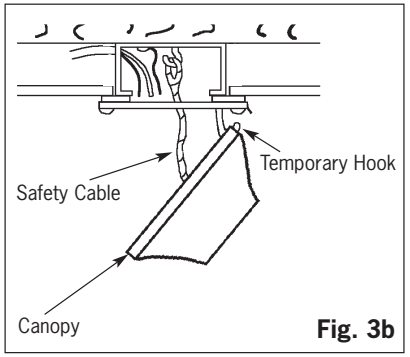

Fig. 3b

3. ELECTRICAL HOOK UP

- There are several different wiring combinations that can be used in controlling your ceiling fan to meet your specific requirements. Should the following method not meet your requirements call or visit your nearest distributor for a full list of fan accessories.

CAUTION
Green Wire - GROUND Black Wire (Fan) - POWER White Wire (Fan) - COMMON Red or Blue Wire (Light Kit) - POWER
SEE SAFETY PRECAUTIONS ON PG. #2 BEFORE WIRING

- After making the wire connections, ensure the wires should be spread apart with the grounded conductor and the equipment-grounding conductor on one side of the outlet box and the ungrounded conductor on the other side of the outlet box.
- Ensure the splices after being made should be turned upward and pushed carefully up into the outlet box.

3. ELECTRICAL HOOK UP

A CONNECTING THE (GREEN) GROUND WIRE

DOWNROD MOUNT

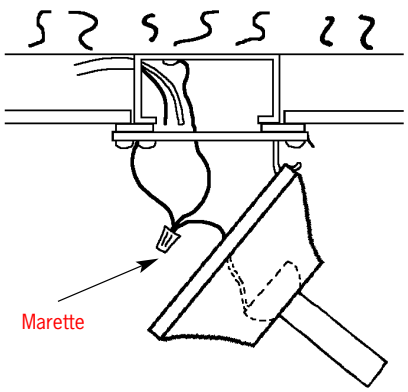

- Connect ground wire from outlet box to green wire from mounting bracket and downrod using a marette (not supplied).

Fig. 4

FLUSH MOUNT

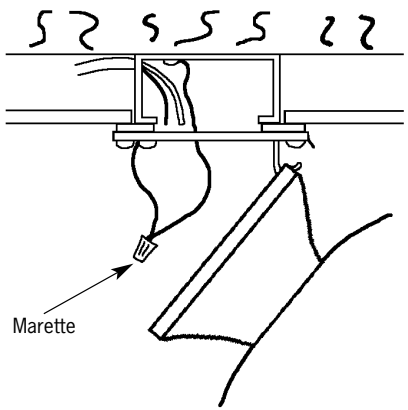

- Connect ground wire from outlet box to green wire from mounting bracket using a marette (not supplied).

Fig. 5

NOTE: Once ground wires are connected, carefully tuck wires and marette into the outlet box making sure that the wires are clear of the hemisphere and downrod when positioned in mounting bracket (Downrod Mount Only).

3. ELECTRICAL HOOK UP (Continued)

B CONNECTING BLACK, WHITE, AND (RED OR BLUE) WIRES

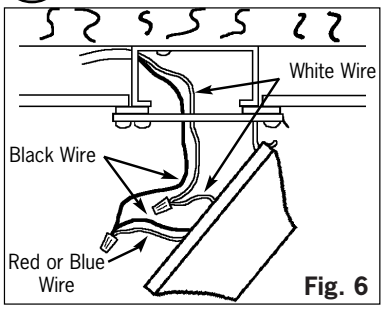

Fig. 6

- Connect white wire from outlet box to white wire from fan using marette (not supplied).
- Connect black wire from outlet box to black wire from fan plus (red or blue wire) using a marette.

NOTE: A red or blue wire would be power for a light kit if applicable.

NOTE: Once wires are connected, carefully tuck wires and marettes into the outlet box making sure that the wires are clear of the hemisphere and downrod when positioned in mounting bracket (Downrod Mount Only).

4. MOUNTING FAN ASSEMBLY

- Place two screws and washers on mounting plate (marked B on diagram) which correspond with slots in canopy. Screw in two turns.
- Position canopy to mounting plate aligning slots to screws (marked B on diagram) then turn to lock.
- Position and tighten the two screws and washers (marked A on diagram) then tighten the two screws (marked B on diagram).

5. ENGAGE HEMISPHERE (Downrod Mount Only)

- Carefully rotate fan assembly until groove in hemisphere locks over tab of canopy assembly.

WARNING: Failure to seat tab in groove could cause damage to electrical wires and possible shock or fire hazard.

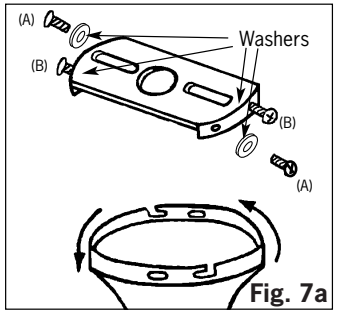

Fig. 7a

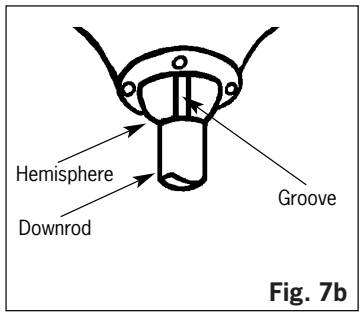

Fig. 7b

NOTE: When installing fan on sloped ceiling, make sure tab on hanger bracket faces towards the top of the slope. Depending on the slope, a longer downrod may be required to prevent fan blades from hitting the ceiling.