French Fry Cutter

OPERATION MANUAL

SKU：ZVC001



707-392-8405 | support@sunvivi.com | www.sunvivi.com

Product Description

Welcome to purchase and use the company's multi-functional fruit and vegetable cutter series products, this series of products are in line with food-grade contact metal materials. It is precision processed by high-quality aluminum alloy, stainless steel and ABS and other materials. We have always been in line with the goal of safety, efficiency, convenience, and practicality, and truly achieve "cutting a variety of fruits and vegetables casually."

Product characteristics:

1. Made of metal materials with an exquisite structure, the device is safe, reliable, durable, easy to operate, and efficient in cutting. Its one-piece molding design saves labor and enhances efficiency.

2. The blade is made from high-quality, ultra-thin, food-grade stainless steel and is precision-ground for quick, clean cuts that prevent squeezing or damage, preserving the ingredients' original taste.

3. The machine is easy to clean and can be washed and rinsed in multiple ways, ensuring food hygiene and safety.

4. The machine offers a full range of cutting specifications to meet various needs and allows for quick cutter replacement. It is convenient to use, with all operations performed manually.

IMPORTANT NOTICE: Read this manual carefully before use!!

This manual is considered an integral part of the device and will be provided to hotel or restaurant owners, managers, and responsible persons for training device operators. Please read the precautions carefully before use and retain this manual for future reference.

⚠ Important Safety Precautions

Always follow basic safety precautions when using these devices. These include:

- This device is not intended for use by children. It contains very sharp blades, which could cause serious injury. Keep the device out of reach of children.
- To ensure optimal performance and longevity of the device, please follow the instructions carefully.
- Always clean the device after each use by rinsing it with clean water.
- The blades are very sharp. Take care not to touch the blades directly or to operate the device while wearing gloves.
- Do not place the device in a dishwasher or any other automatic cleaning device.
- Avoid using alkaline cleaners as they may damage the finish of the device.
- The use of non-approved accessories or modifications may pose safety risks.
- This device is designed for cutting fruits and vegetables only. Do not use it for other purposes.

⚠ Before using this equipment for the first time, please remove all packaging and securing materials as shown in the illustration, and only use the equipment after it has been properly assembled.

⚠ These devices require regular lubrication

When lubrication is required, wipe the guide rod with mineral oil, food-grade lubricant, or a towel. Do not use cooking oil or other greases, as they may become viscous and affect performance.

⚠ Caution: Do not cut food beyond the edge of the plate.

⚠ Note: When replacing the blade set, ensure that the specifications and model of the blade plate and pressing block are compatible.

French Fry Cutter

SKU：ZVC001

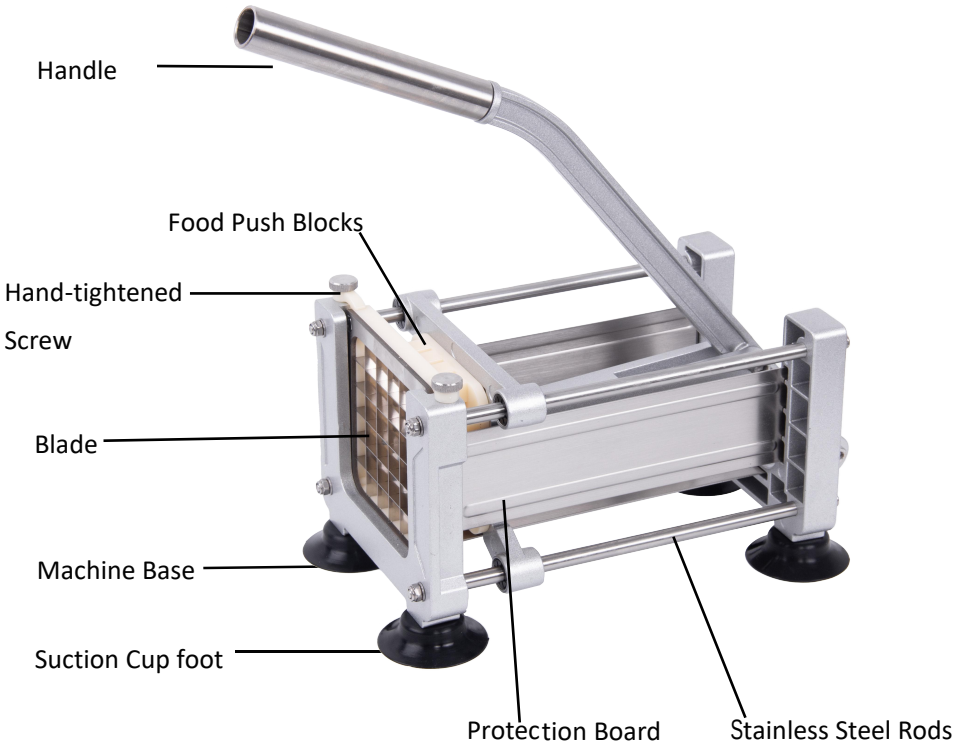

Specification Diagram:

	1/2 inch	12.5 mm
	1/4 inch	6.5 mm
	3/8 inch	9.5 mm
	2/5inch	10mm



CAUTION SHARP BLADES!
KEEP FINGERS,HANDS,OTHER BODY PARTS AND OBJECTS CLEAR OF THE BLADE ASSEMBLY!

Installation Guide:



1. Open the package, remove the equipment, and take off any securing materials.

2. Install the 4 suction cup feet and stainless steel handles.



Operation Guide:

- After installing the equipment, select a flat and sturdy table. Ensure that the suction cups are firmly attached to the tabletop. The height should be adjusted according to the operator's needs, ideally at a height that allows for easy pushing.
- The equipment's blade set consists of a blade plate and a food pushing block. When replacing the blade set, both the blade plate and the food pushing block must be replaced simultaneously. The machine offers a choice of 4 different blade sets.
- The blade is designed for cutting ingredients such as cucumber, radish, potatoes, onions, and other vegetables into strips or dice. Initially, the food is cut into strips or small pieces by pushing.

The strips can then be re-placed into the blade to be cut into smaller granules.

- The size of the food to be cut should not exceed the edge of the cutter; otherwise, the food must be cut into smaller pieces first.
- During operation, place the ingredients in the center of the blade. The blade is very sharp, so do not touch it with your hands. Place the ingredients quickly, remove your hand, and then push the handle. Do not pause during compression; push all the way down in one motion to avoid damaging the blade.

Blade Sets Changing:



1. Following the illustration, unscrew the hand-tightened screw above the blade, then pull the blade upwards and out.



2. Remove the food pusher by lifting the stainless steel plate behind it upwards.

3. Prepare the required blade plate, and in the same way, successively install the blade plate and pressure head (note: the blade mouth is facing inside).



4. After replacing, test by pressing to check for any blade contact or misalignment of the blade set specifications.

Precautions and Maintenance:

- The entire machine can be rinsed. After each use, ensure the blade is clean by flushing with water to prevent corrosion and extend its service life.
- The equipment belongs to precision machining machine. Self-modification and recreation of equipment will affects the use, which belongs to artificial damage.
- The blade belongs to the natural wear part of equipment. After cutting a certain time and quantity of ingredients, the blade will be broken or worn. It is necessary to timely purchase the blade of corresponding specification for replacement (Improper operation or cutting too hard ingredients will also damage the blade).
- The equipment adopts an ultra-thin blade and cannot cut tough and hard foods, such as meat and sweet potatoes.
- The guide must be lubricated regularly.
- If it cannot be pushed when cutting, it indicates that the cutter plate is worn and needs to be replaced. Do not apply excessive pressure. First, remove the cutter plate, replace it with one of the correct specifications, and then continue use.
- During operation, ensure that the entire machine is placed on a flat, stable table and that the suction cups are securely attached to the tabletop. Otherwise, the machine may slip, causing the blade to be hit and affecting its performance.
- Periodically check for loose screws, tighten them promptly, and maintain the machine.

Exploded View & Parts List

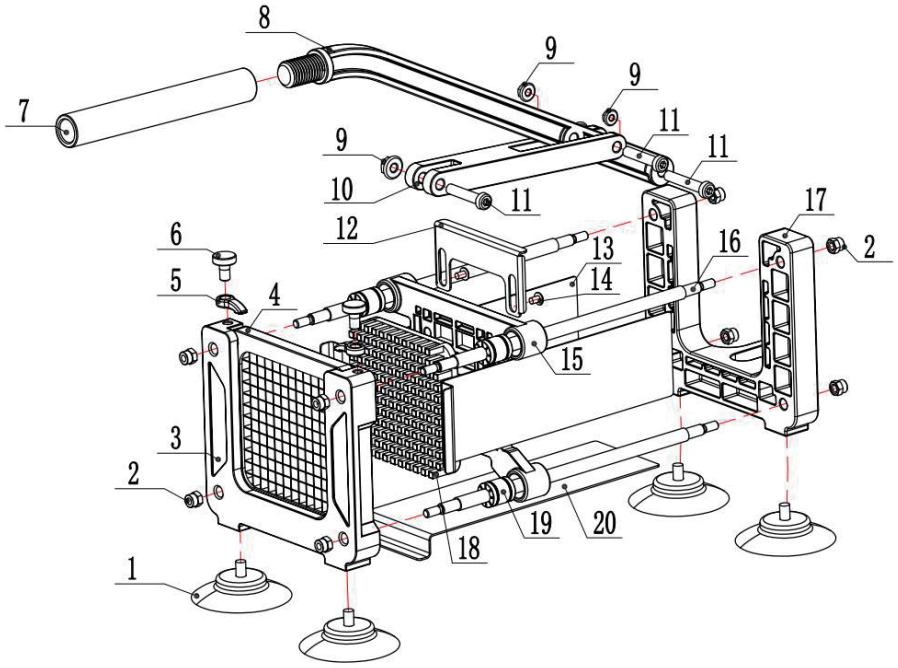

1	Suction cup foot	11	Screw
2	Nut	12	Fixed plate
3	Aluminum frame	13	Protection board
4	Blade	14	Screw
5	Plastic briquettes	15	Gland
6	Screw	16	Guide rod
7	Handle	17	Machine base
8	Handle	18	Food push blocks
9	Nut	19	Plastic
10	Link arm	20	Gland

Sunvivi®

Any Problem? Let Us Know

707-392-8405

support@sunvivi.com

www.sunvivi.com