KS3190,1,2,3,5,6,7,8AL
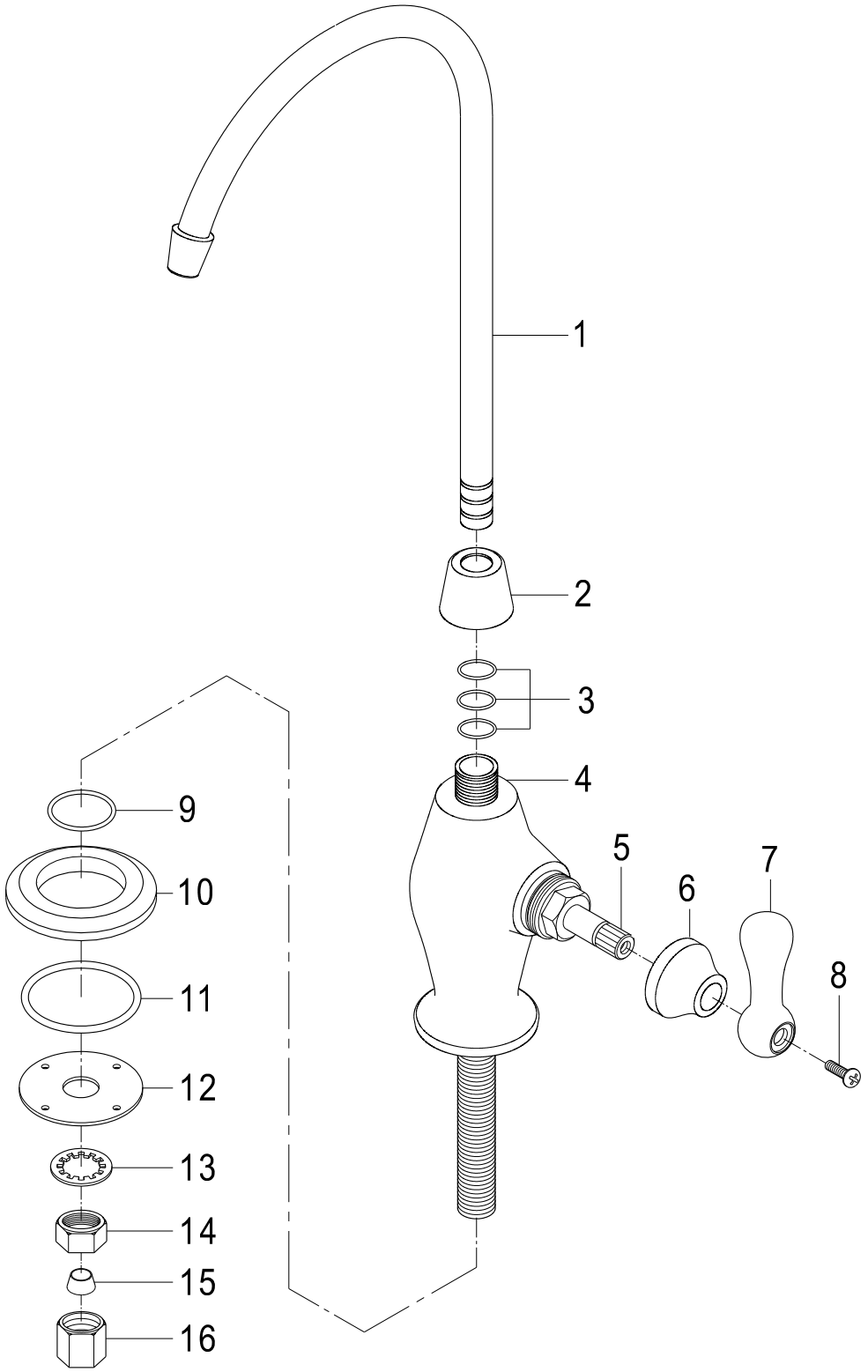
Single Handle Water Filtration Faucet