A	B				
 M6X10 16pcs	 Ø31.5*14*9.4 4pcs				

1

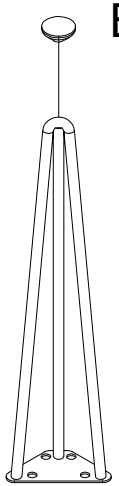

B

X4

2

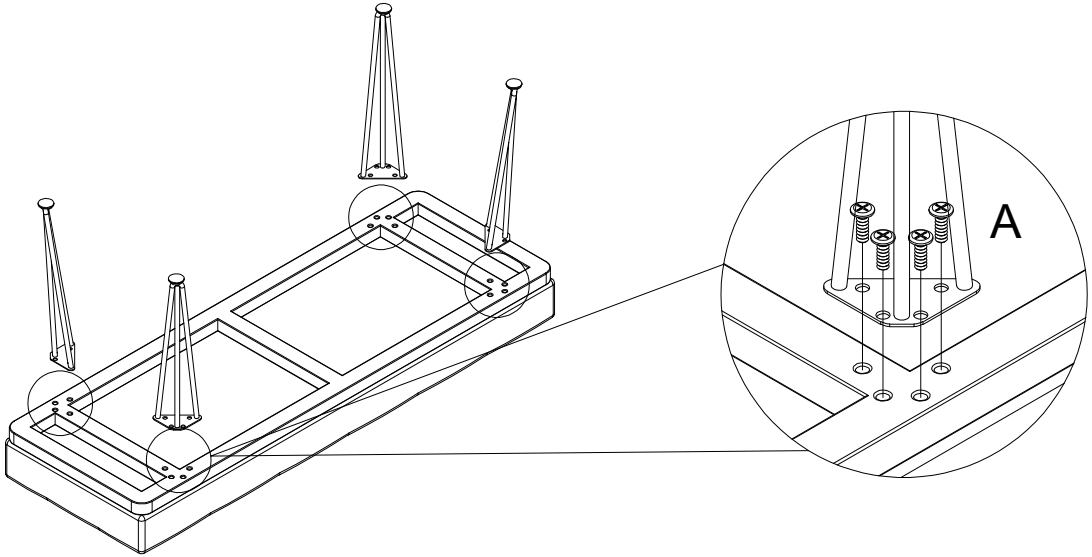

3

