Installation instruction

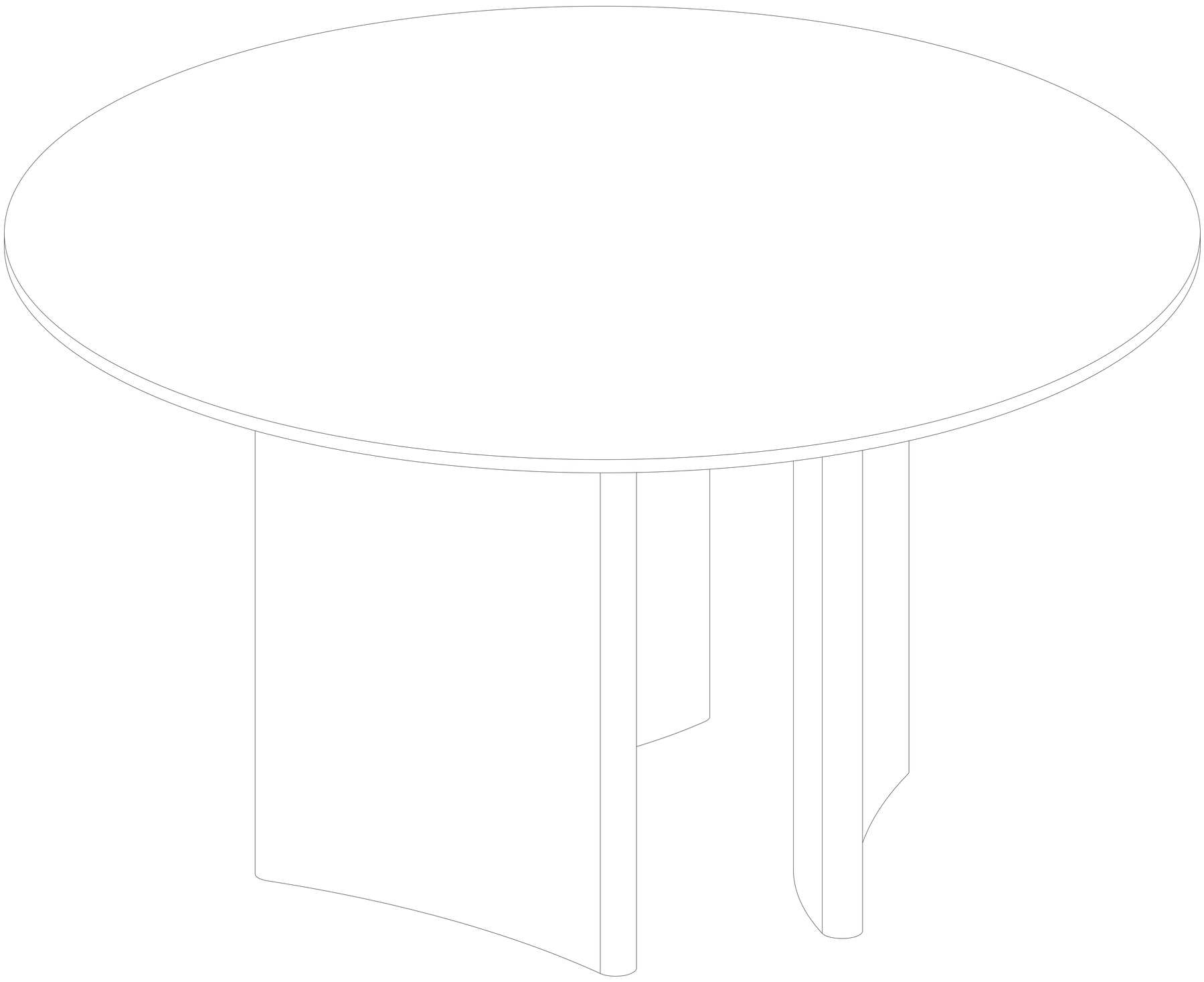

A	30PCS	B	6PCS	C	3PCS	D		E		F		G	
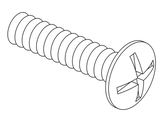		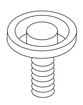		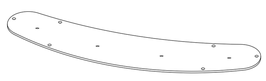									
M6*15mm		ϕ30*10mm		630*162*5mm									

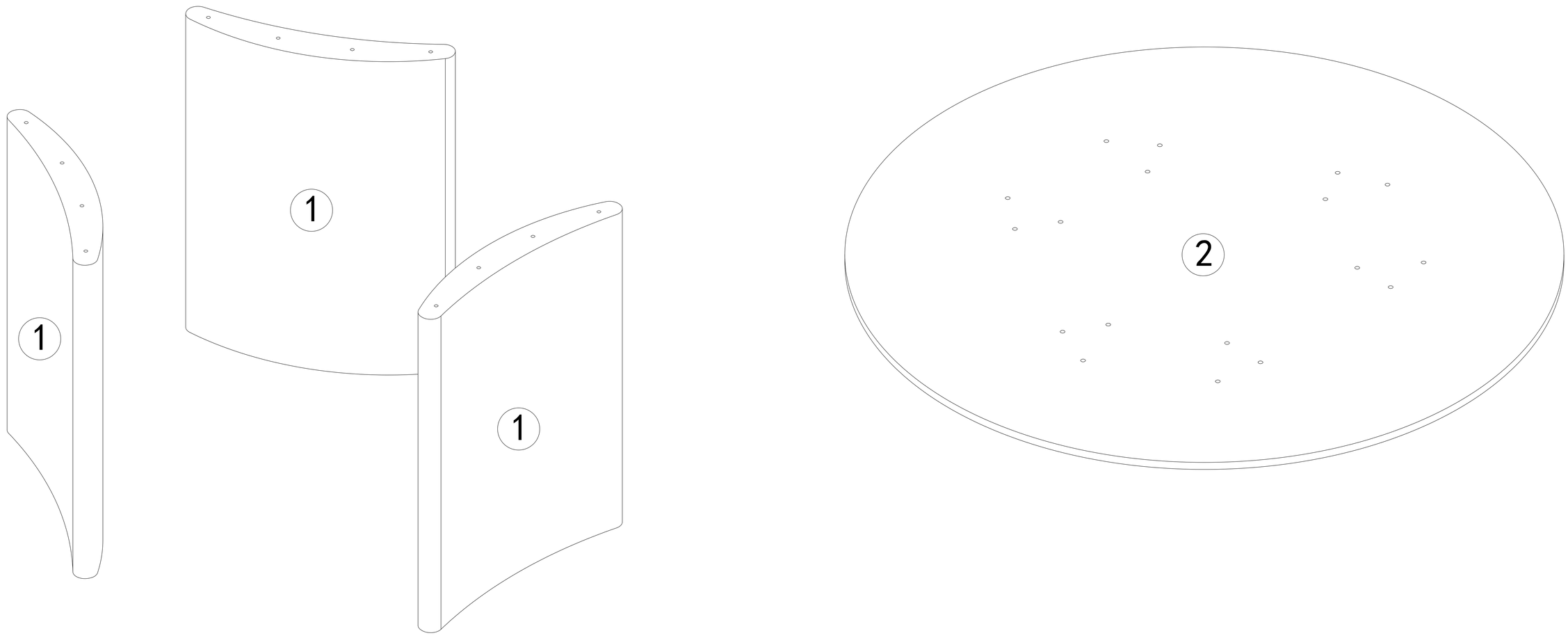

STEP 1

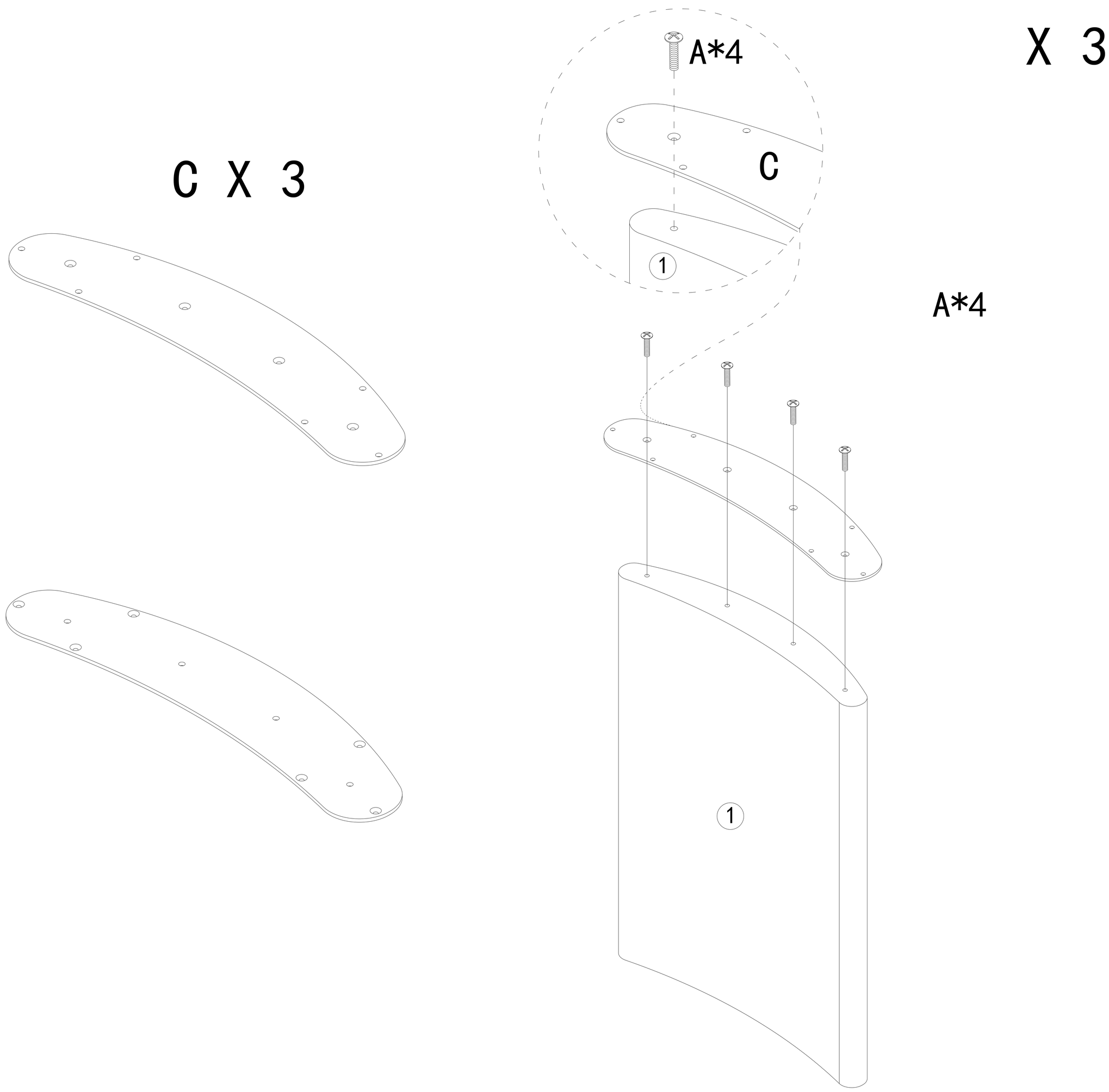

A	12PCS
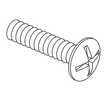	
M6*15mm	

STEP 2

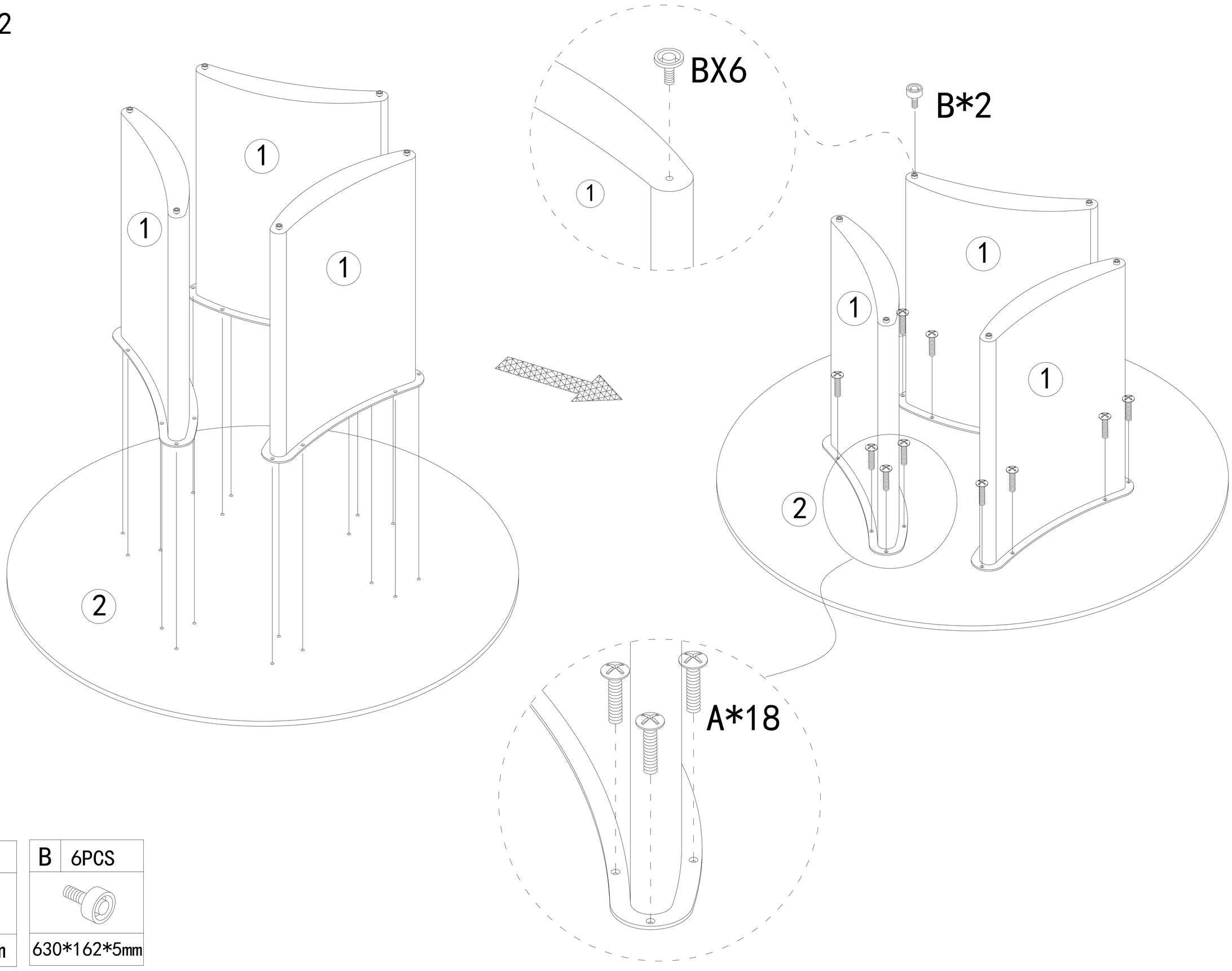

A	18PCS
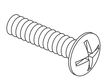	
M6*15mm	

B	6PCS
630*162*5mm	

STEP 3

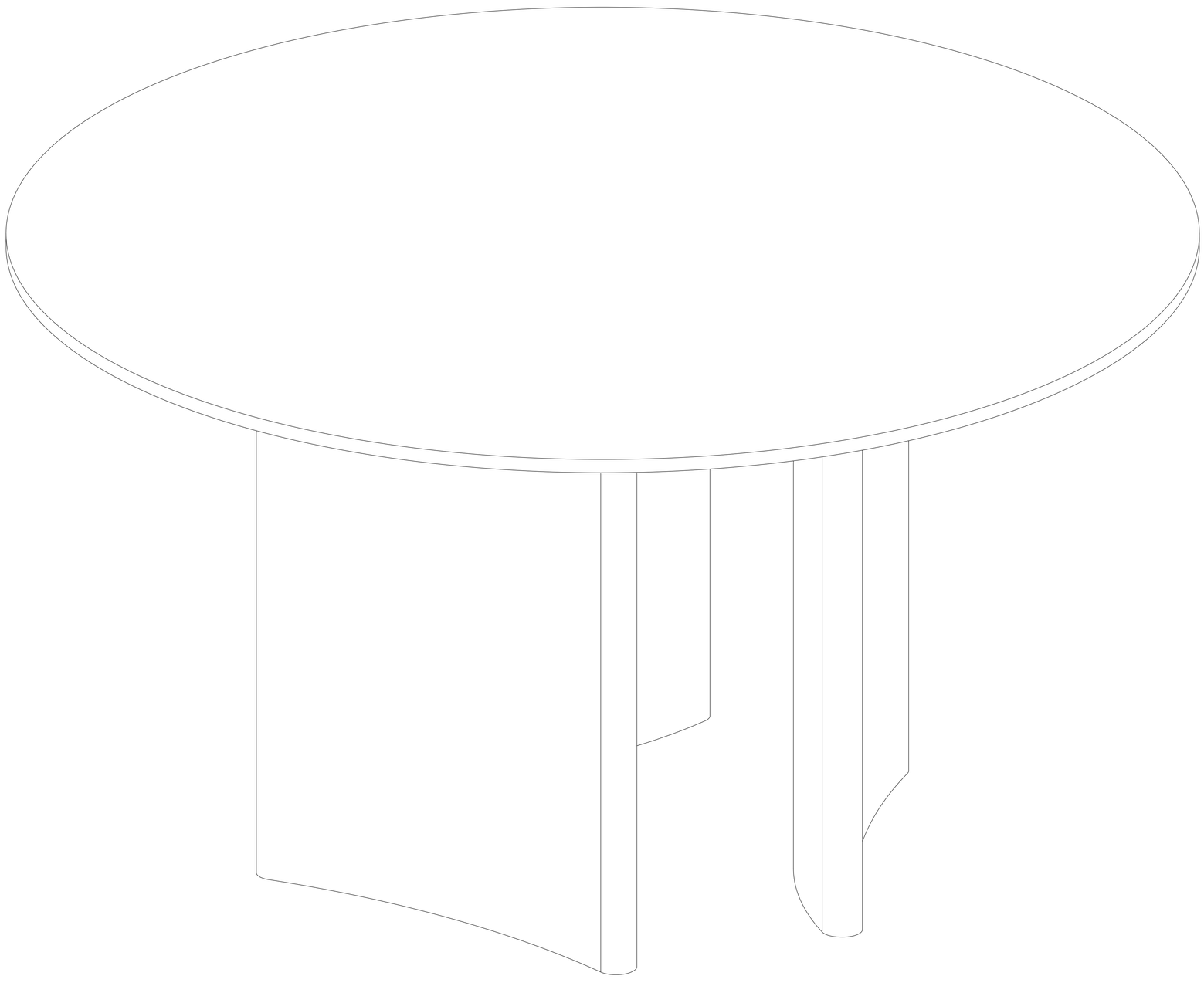

OK