Canopy Bed-Queen

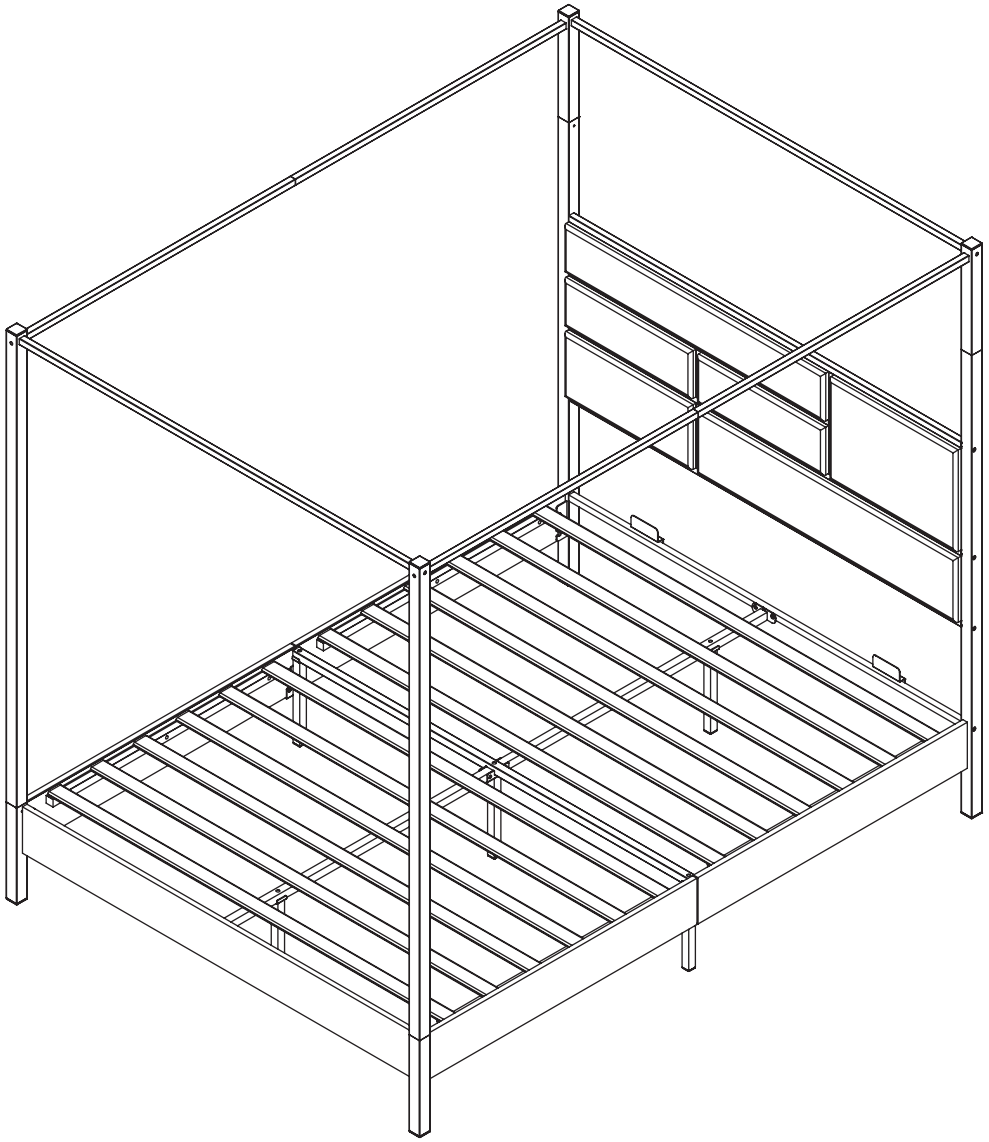

Dear Customers,

Thank you for purchasing our product. Please read this instruction manual carefully after receiving this product. It will help you assemble this product quickly, safely and correctly. You can keep this manual for future reference.

IMPORTANT

Please follow the instruction manuals and use a pad to protect the product during your assembly.

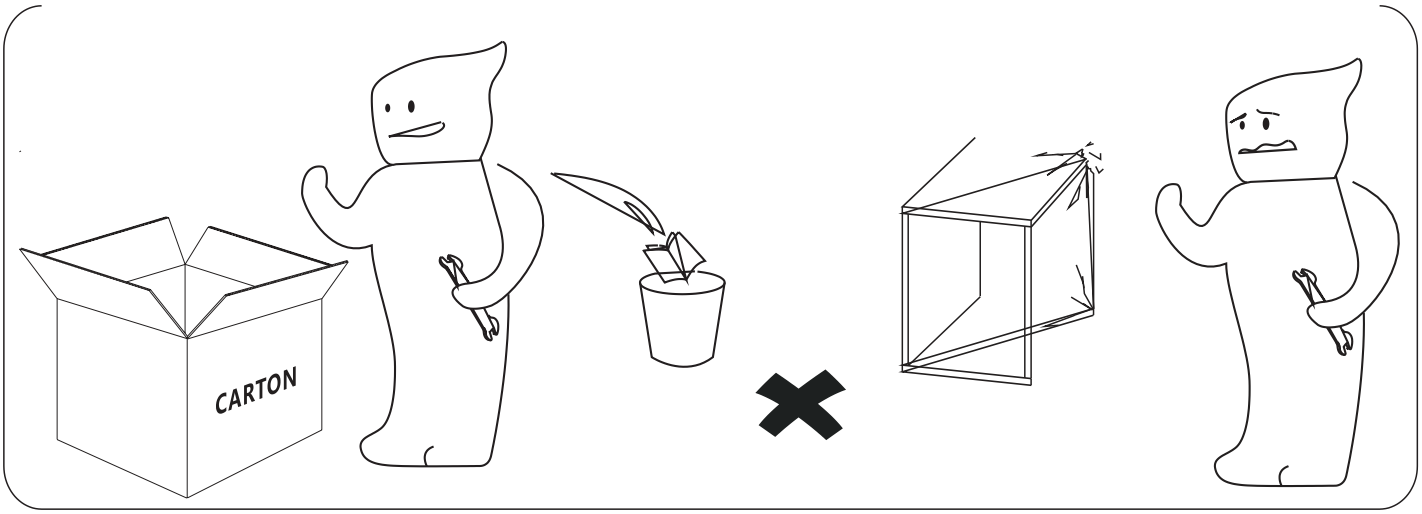

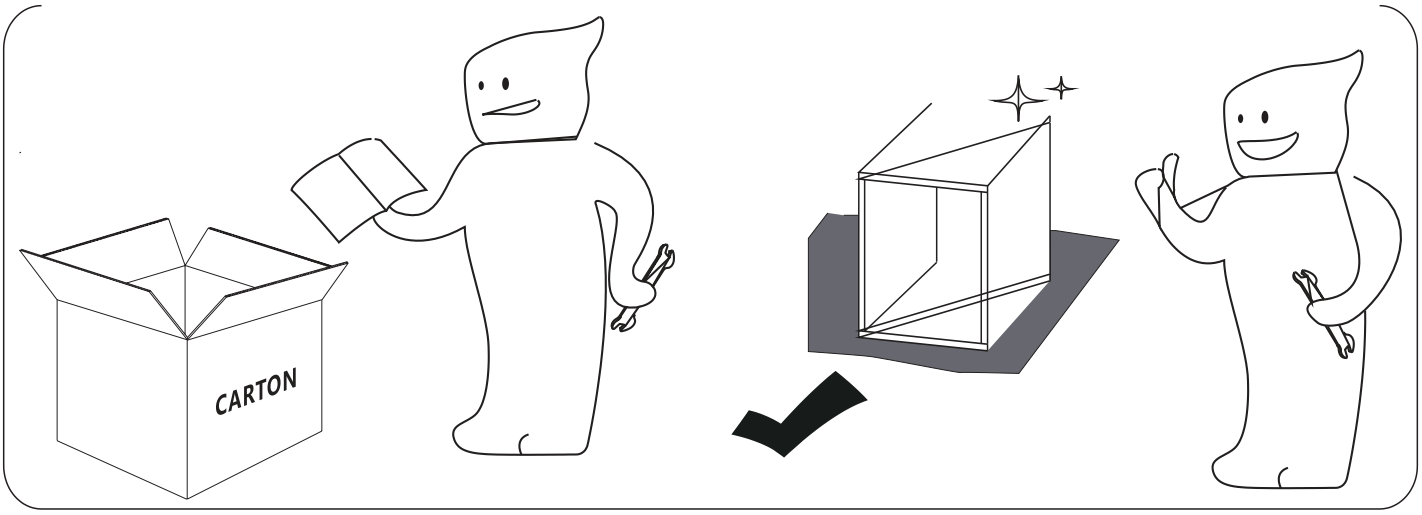

Note:
1. Should be assembled on flat ground to keep balance.
2. Before completing the installation, do not tighten the screws.

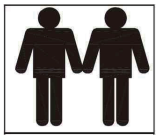

For easier and better assembly, **2** or more adults are required.

NOTICE：

- Please retain these instructions for future reference.
- Please read the instruction sheets completely before assembly.
- Remove all parts from the carton and ensure all components are included before assembly.
- Assemble the bed on a protected surface to avoid scratching the components of the bed.
- Be careful not to cross-thread screws.
- Please use a piece of the cardboard to protect your floor and the product.
- Don't tighten all screws before you have installed all the parts of the bed.
- When you assemble your bed, if you smell a weird smell from the material, please don't worry it's very normal.
- What you should do is air it out for 1-2 days on your balcony, patio, or near your window.
- Our bed has been certified by the environment authority. So please dont worry, it wont hurt your health, it s completely safe.

RETURN/DAMAGE CLAIM INSTRUCTIONS:

- If the package is damaged, please contact us as soon as possible and attach photos of the damage.

Return Policy :

- This item can be returned within 30 days without any major reason.
- If you return this item for personal reasons, you need to bear the freight of returns and order processing fee（a restocking fee of 0 - 50% of the invoice price）.
- If the product has quality issues（not caused by humans）, we will bearthe shipping fees.

• If you need to return the goods, please keep the original box. Please make sure to use the return label provided by us and do not return it without permission.
• Please do not share a label with multiple boxes.
• If you return the product after 30 days from the date of receipt, we regret that your return application will not be accepted. We appreciate your understanding.
• The warranty period is one year from the date of your purchase. If this item is damaged within the warranty period, we will provide replacement parts free of charge.
• If the item is damaged due to personal reasons, we can also replace it for you; however, you need to bear the cost of the replacement parts and shipping fees.

LIMITED WARRANTY

Our team would like to improve the quality of the customer service and make your experience as easy and smooth as possible.
• After we receive the returned item, we will check it and make sure that it is not damaged, then we will process the refund.

• For more details, please refer to the RETURN/DAMAGE CLAIM INSTRUCTIONS above.
The exceptions or exclusions to this warranty are as follows:
1. Any warranty claim submitted after the limited warranty period will not be considered. We will not be able to replace the item for you even at your cost.
2. This warranty does not apply to products that have been purchased by mistake.

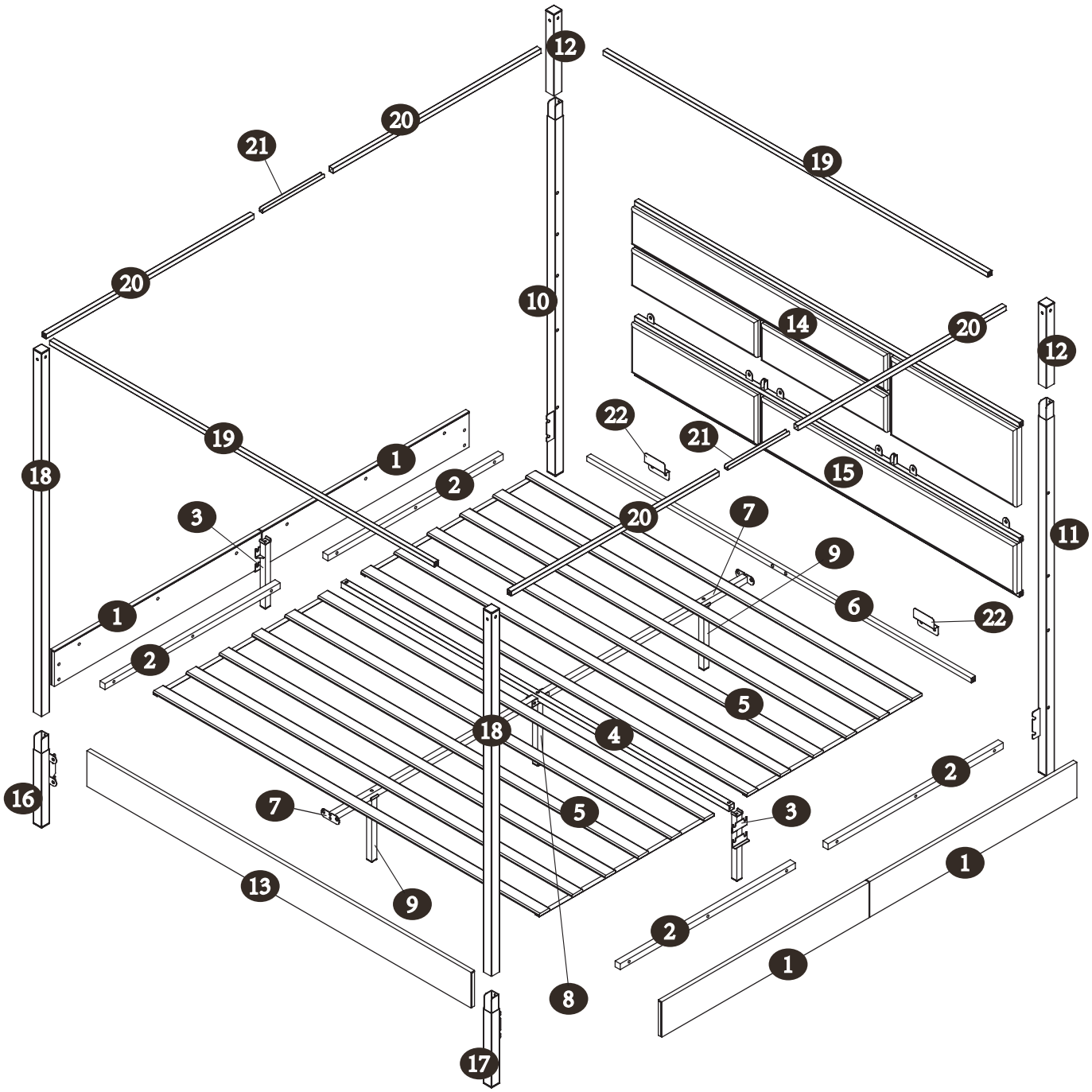
12
20
21
19
20
10
14
20
12
22
21
19
1
18
2
15
3
20
7
11
9
1
6
22
2
5
18
4
16
7
5
3
2
13
9
1
2
1
8
17

PARTS LIST

1 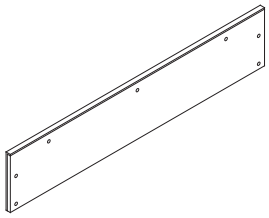 4PCS	2 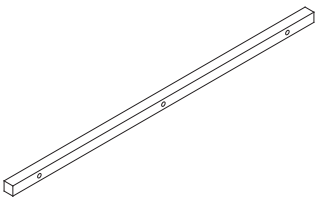 4PCS	3  2PCS
4 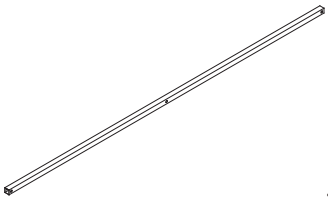 1PC	5 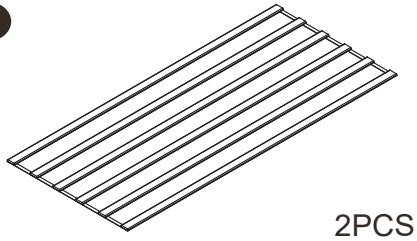 2PCS	6 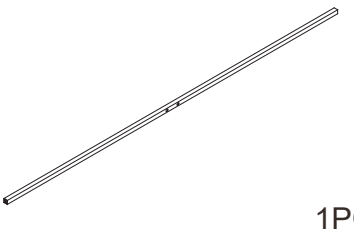 1PC
7 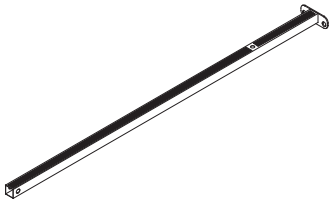 2PCS	8 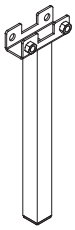 1PC	9  2PCS
10 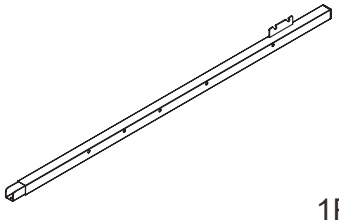 1PC	11 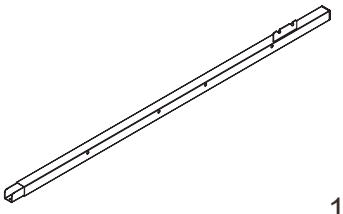 1PC	12 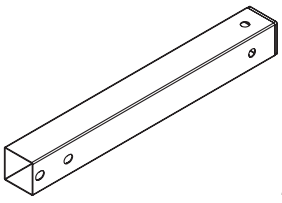 2PCS
13 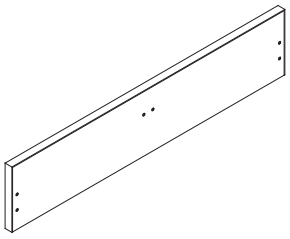 1PC	14 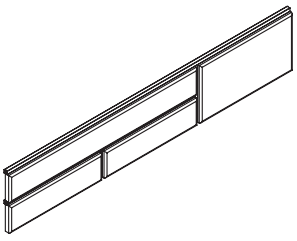 1PC	15 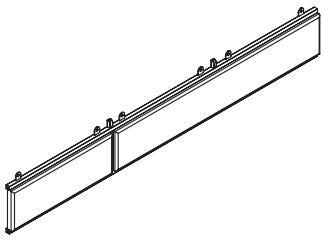 1PC
16 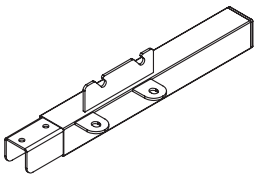 1PC	17 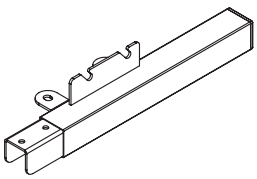 1PC	18 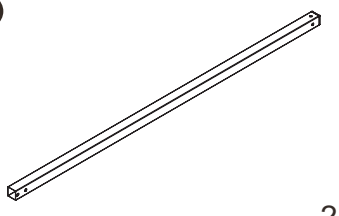 2PCS
19 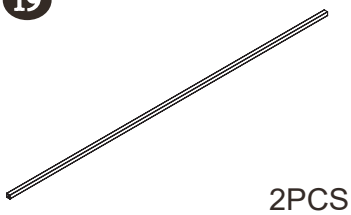 2PCS	20 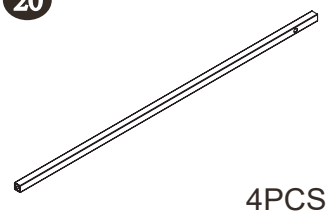 4PCS	21 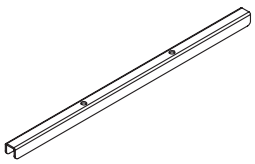 2PCS
22 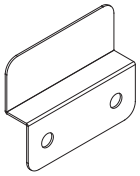 2PCS		

Hardware List

A 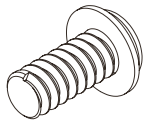 M8x18 48PCS	B 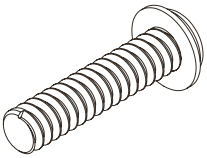 M8x38 18PCS	C 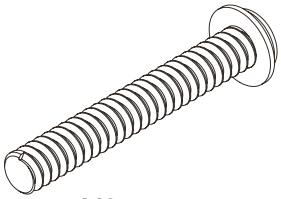 M8x55 18PCS
D 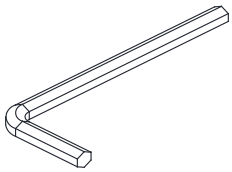 M8 1PC		

1

Install all screws and tighten them about 50% first. Once the upper and lower headboard are aligned and flush, fully tighten all screws.

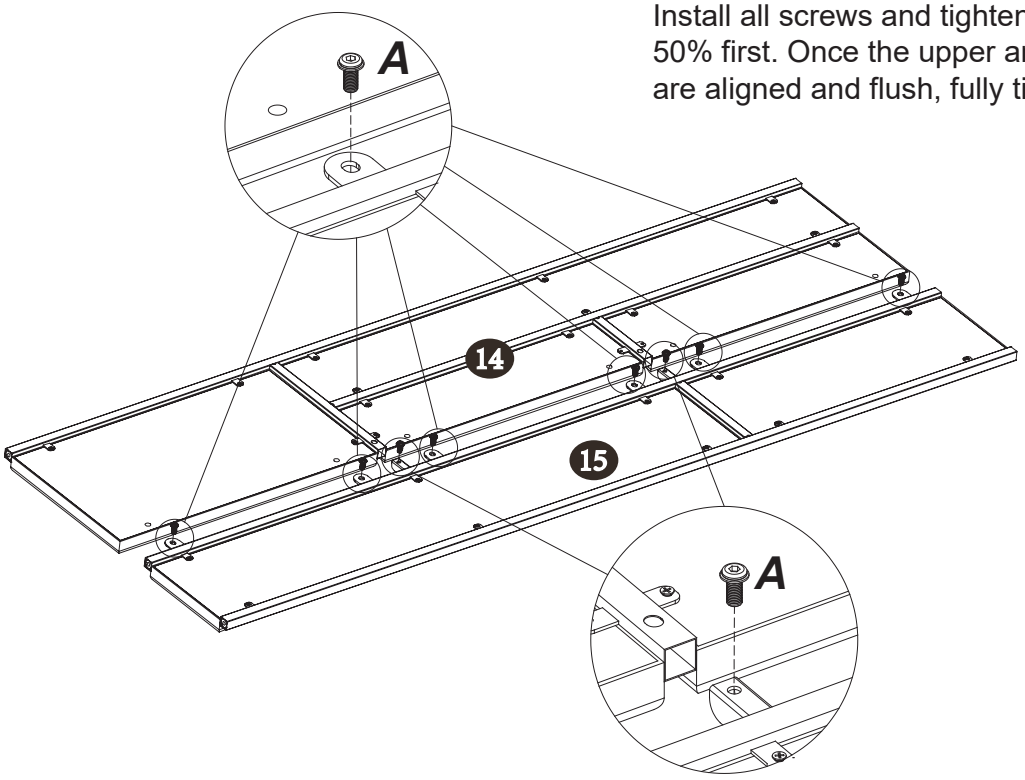

Note: If there is a gap between the upper and lower panels, have two people press them firmly together while tightening the screws.

A		M8x18mm **x8**

2

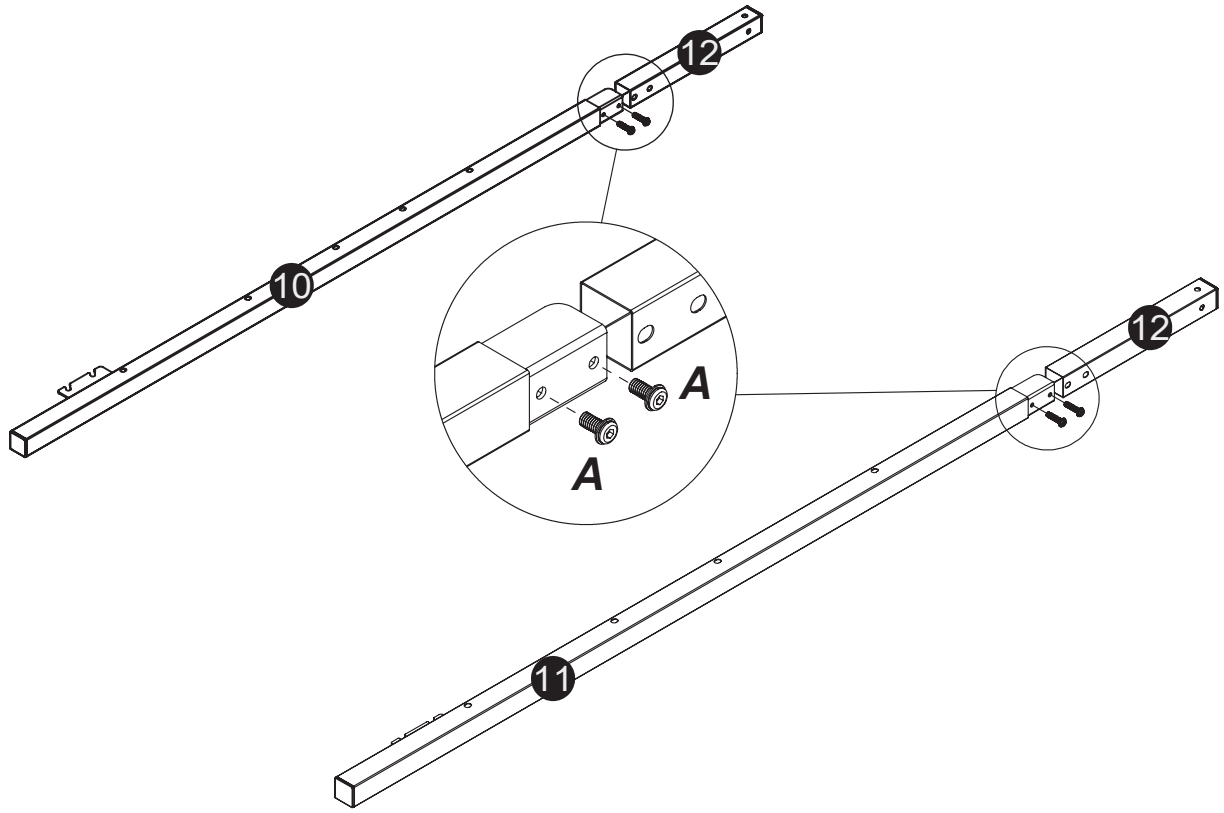

A		M8x18mm **x4**

3

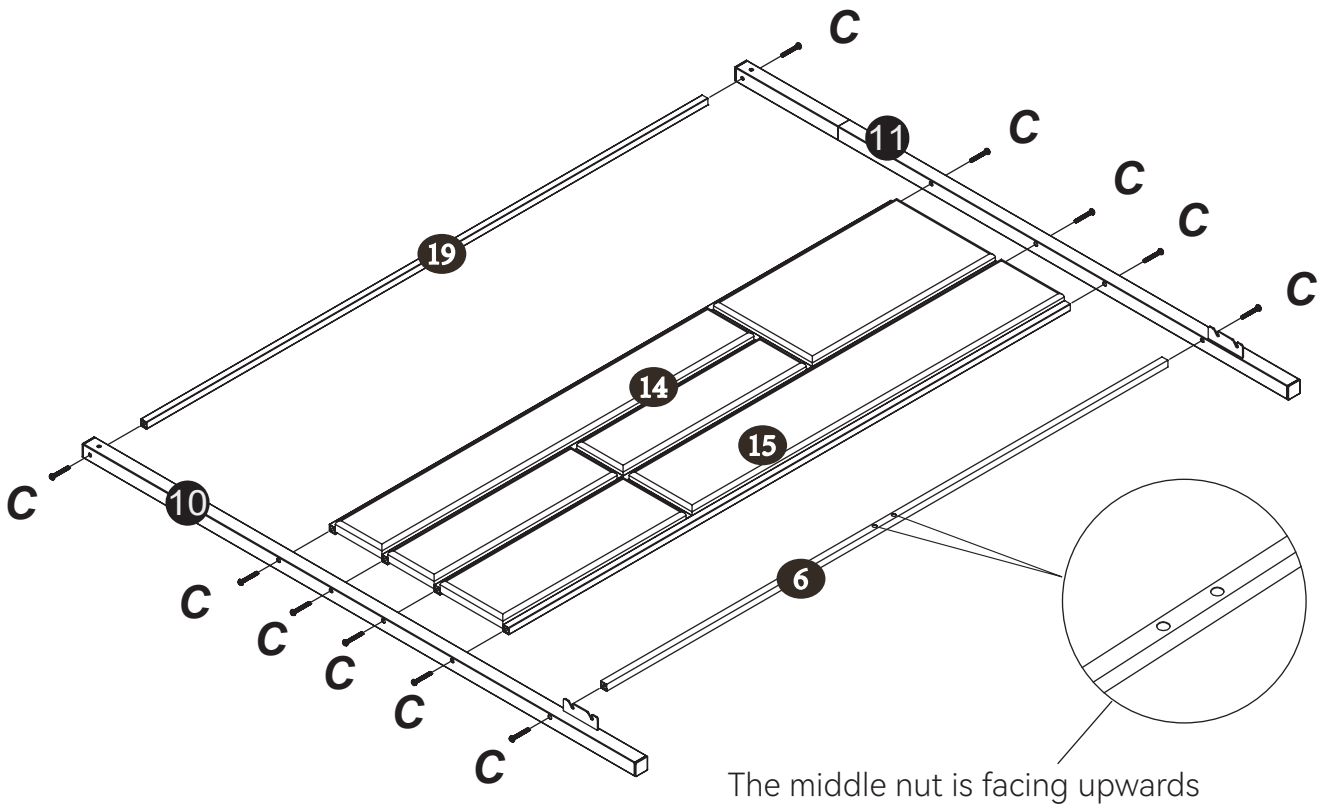

The middle nut is facing upwards

C M8x55mm **x11**

4

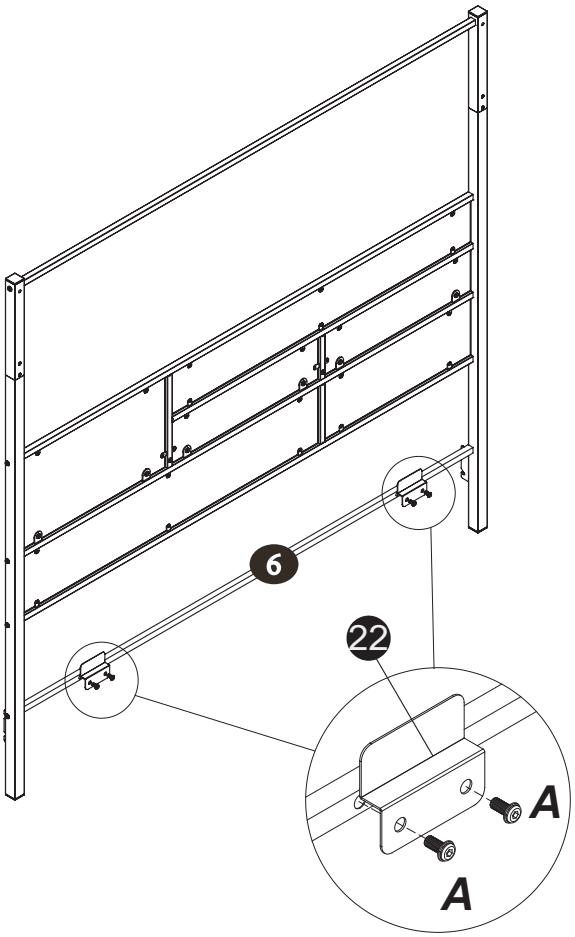

A M8x18mm **x4**

5

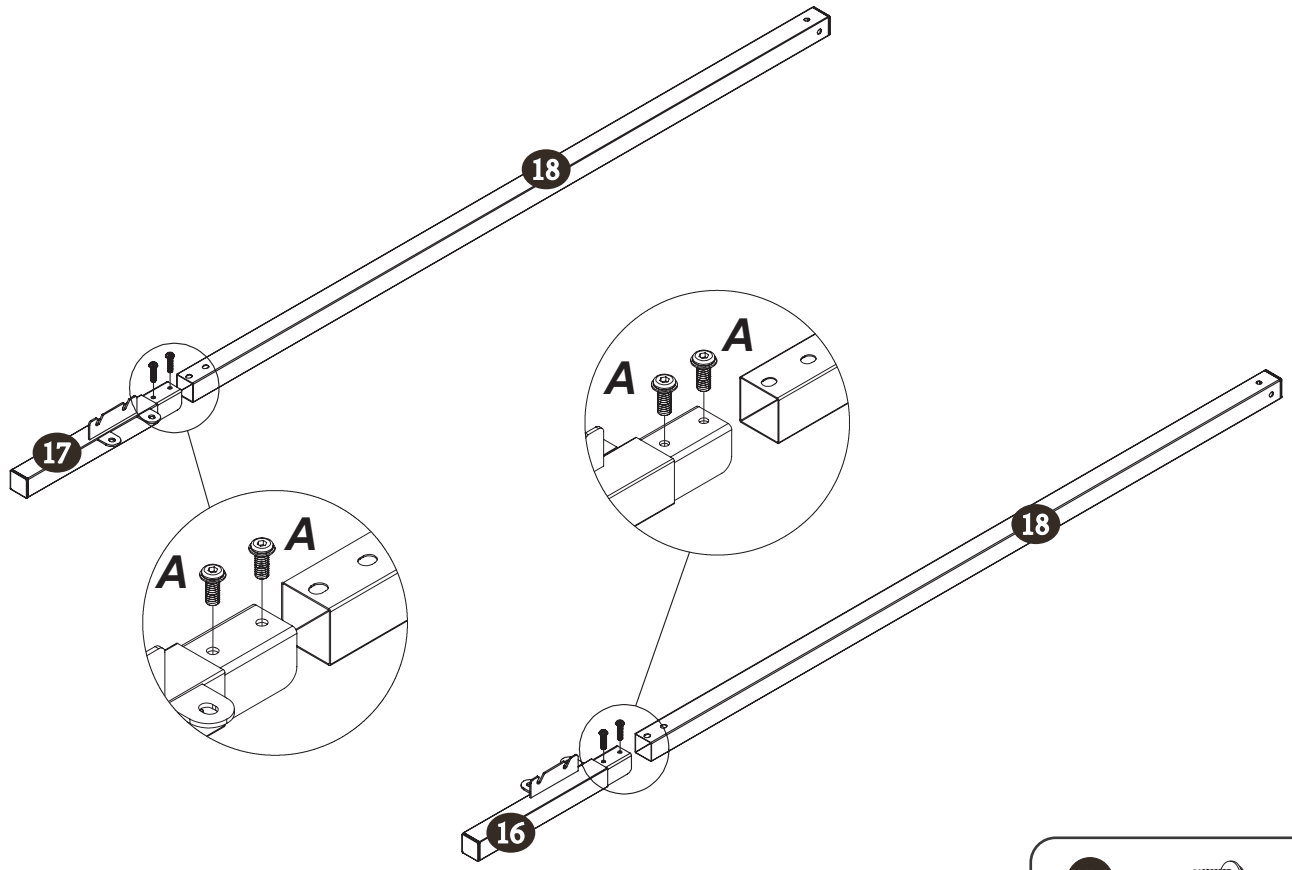

A		M8x18mm x4

6

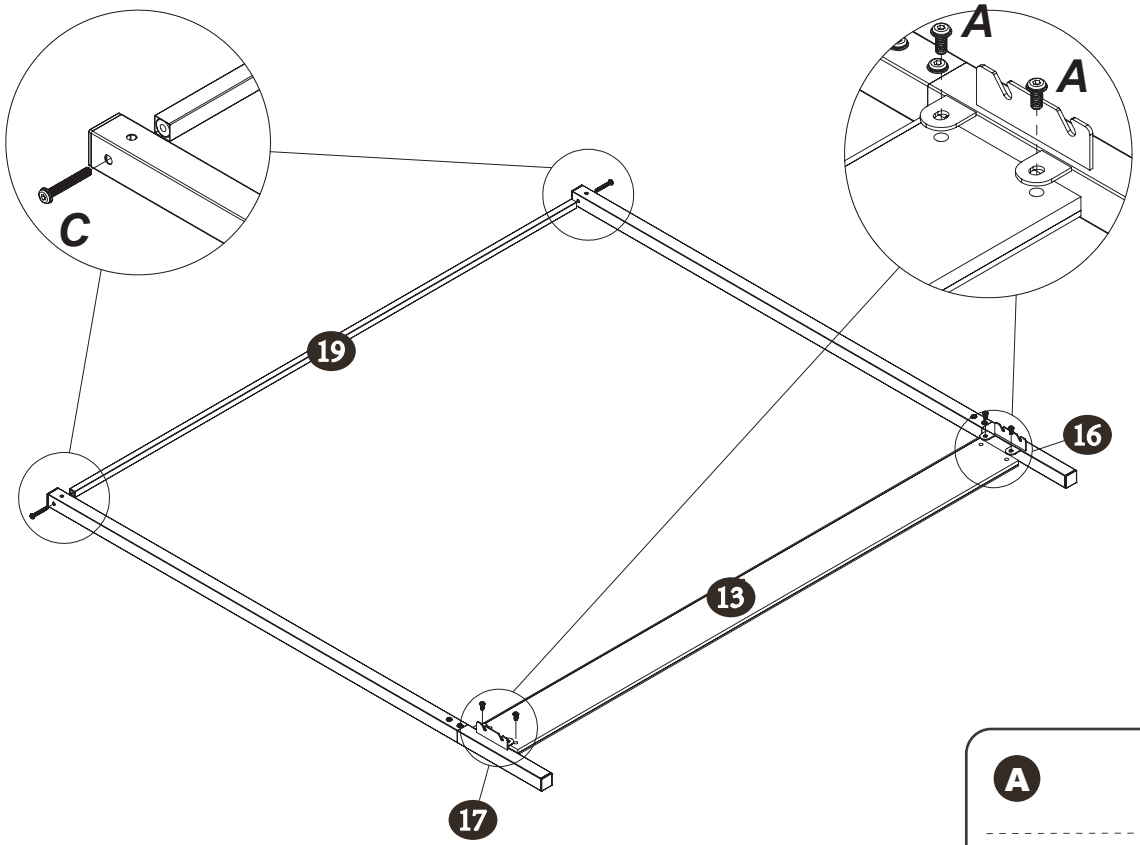

A		M8x18mm x4
C		M8x55mm x2

7

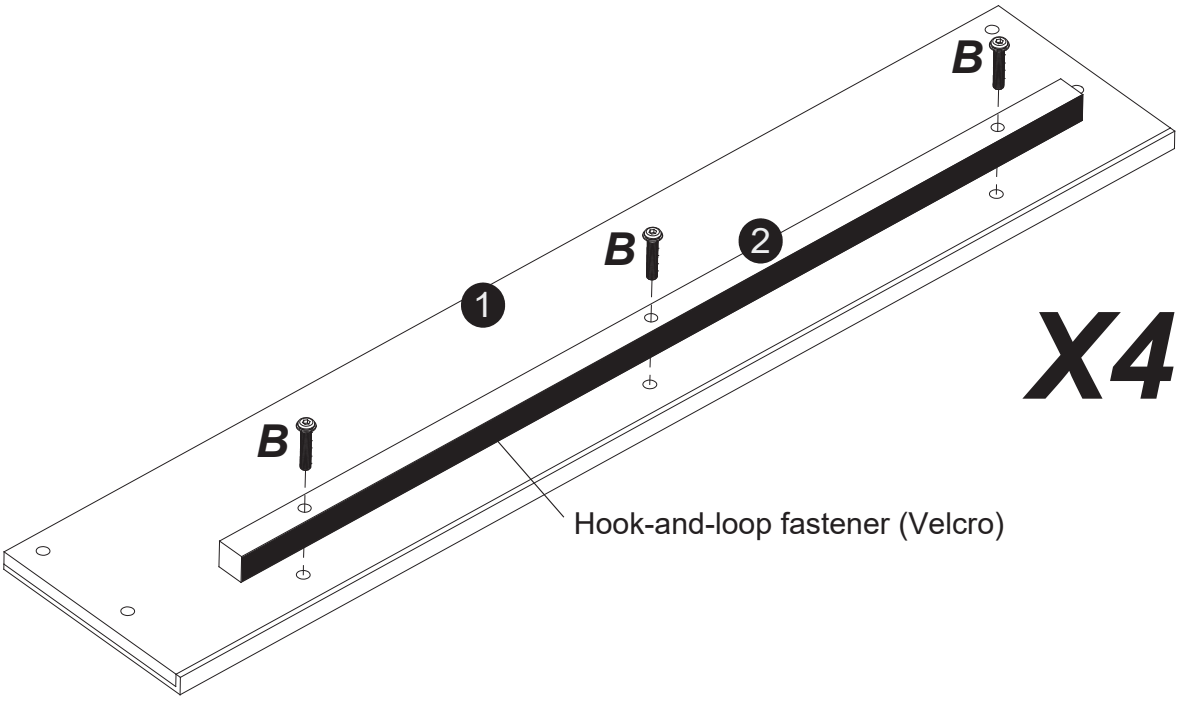

X4

B M8x38mm x12

8

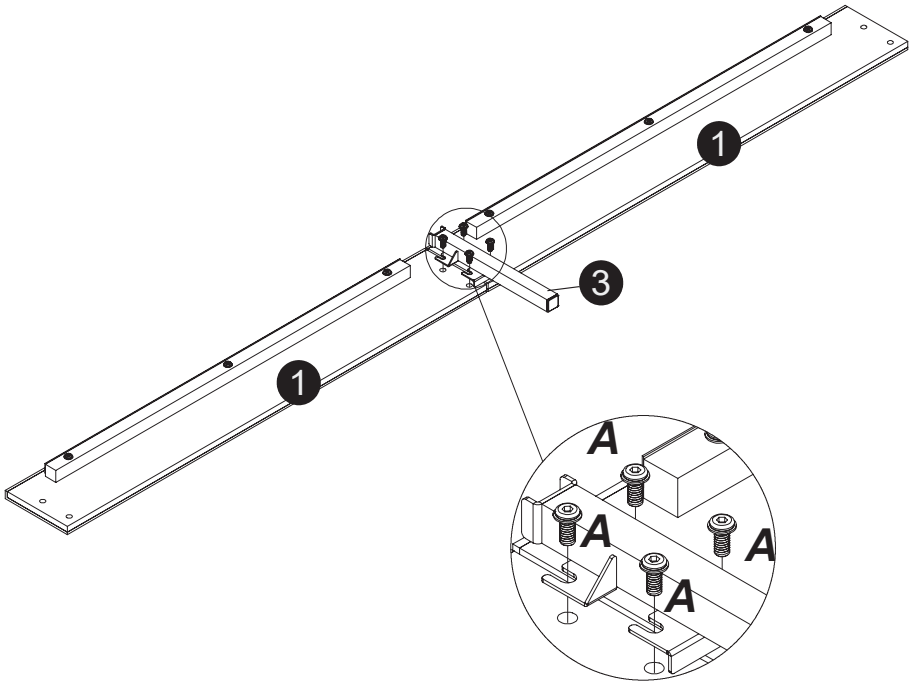

X2

A M8x18mm x8

9

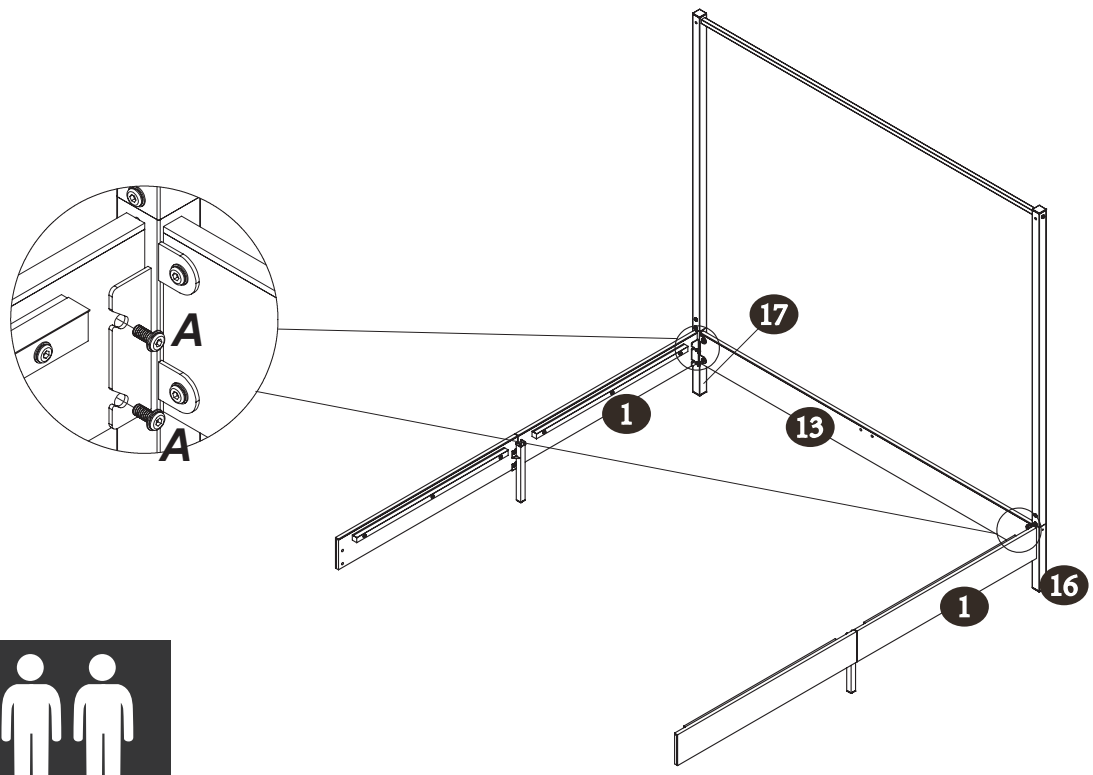

2 PERSON ASSEMBLE

A M8x18mm x4

10

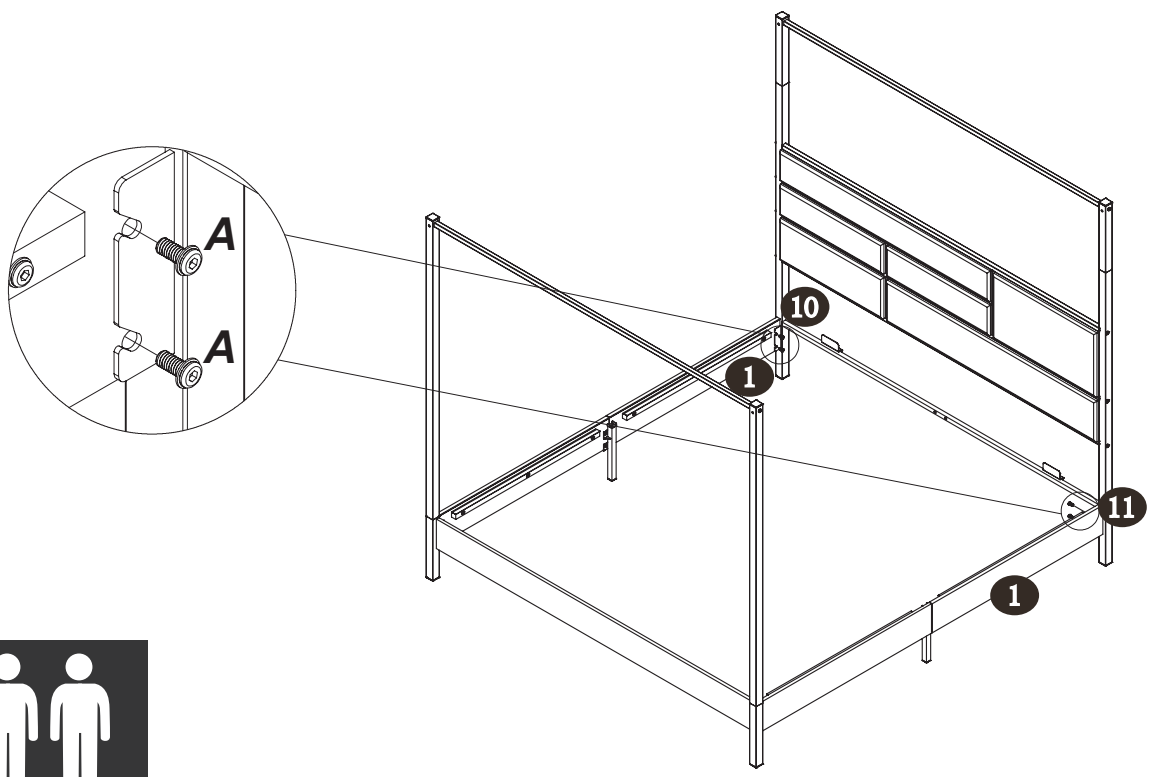

2 PERSON ASSEMBLE

A M8x18mm x4

11

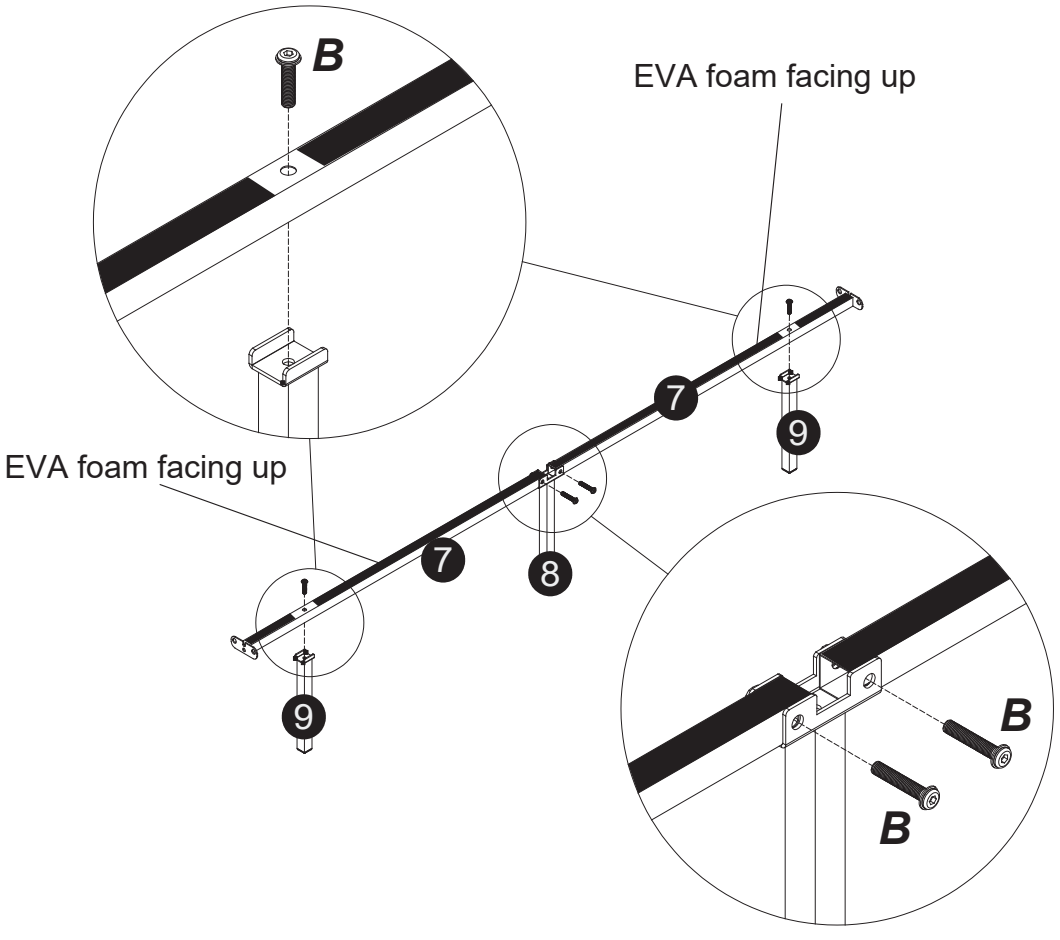

B M8x38mm x4

12

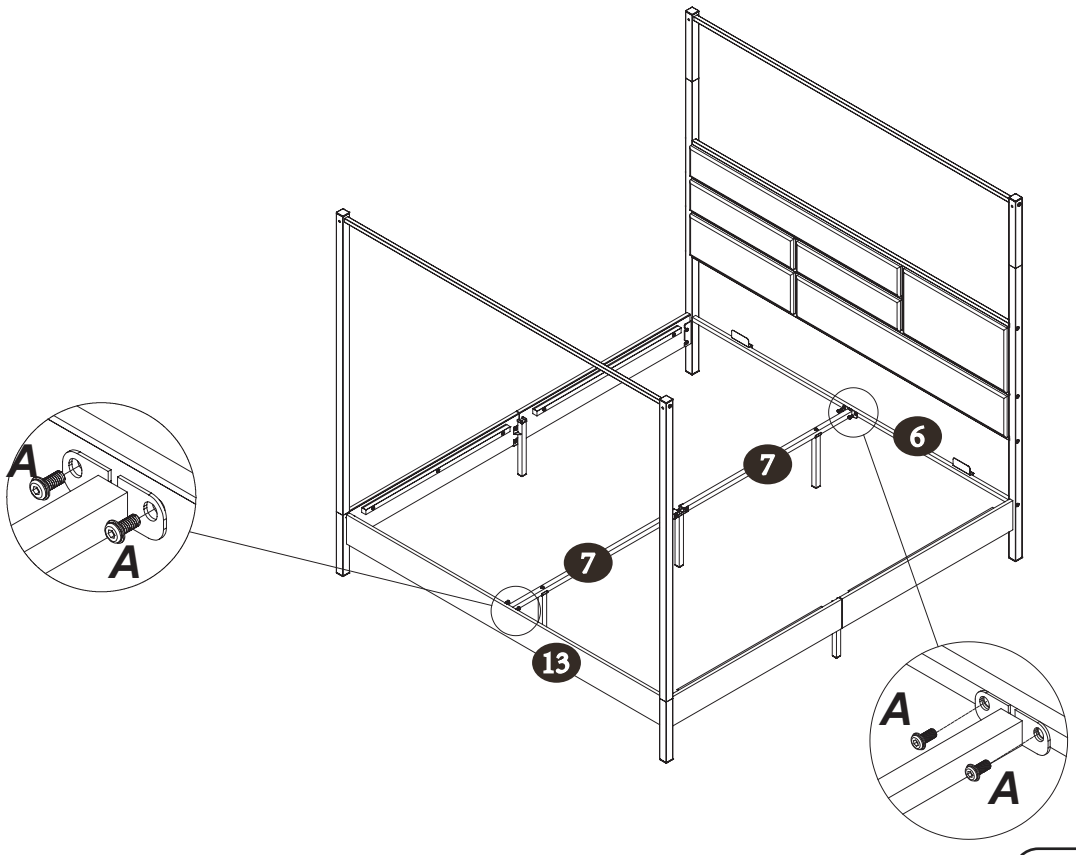

A M8x18mm x4

13

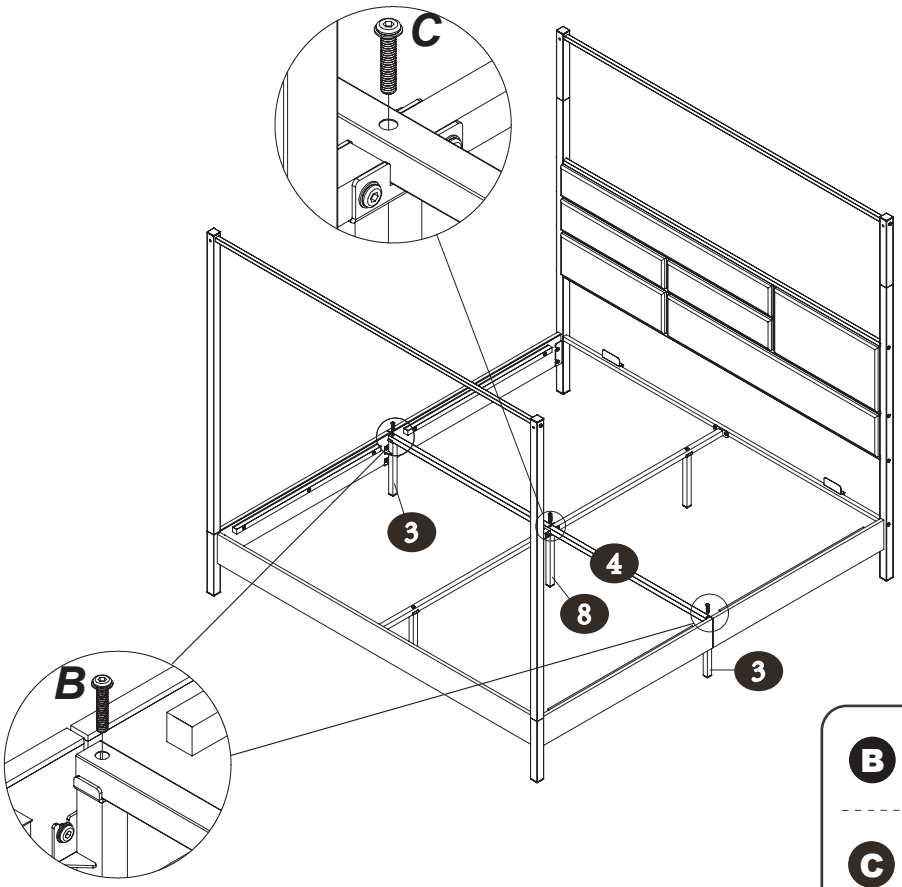

B		M8x38mm x2
C		M8x55mm x1

14

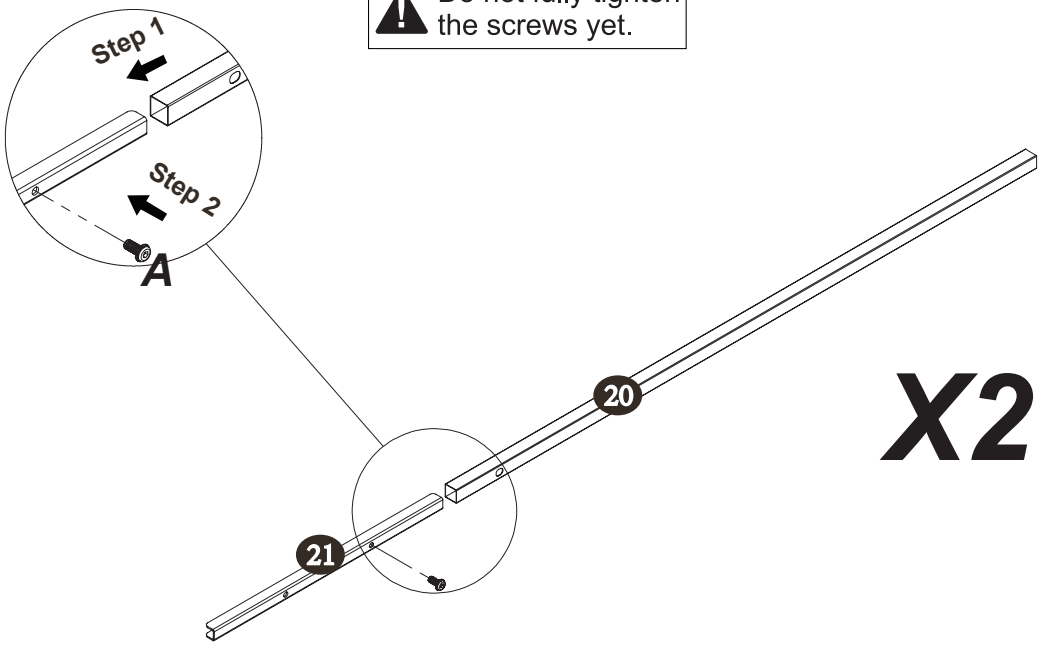

A		M8x18mm x2

15

After completing this step,
tighten the screws.

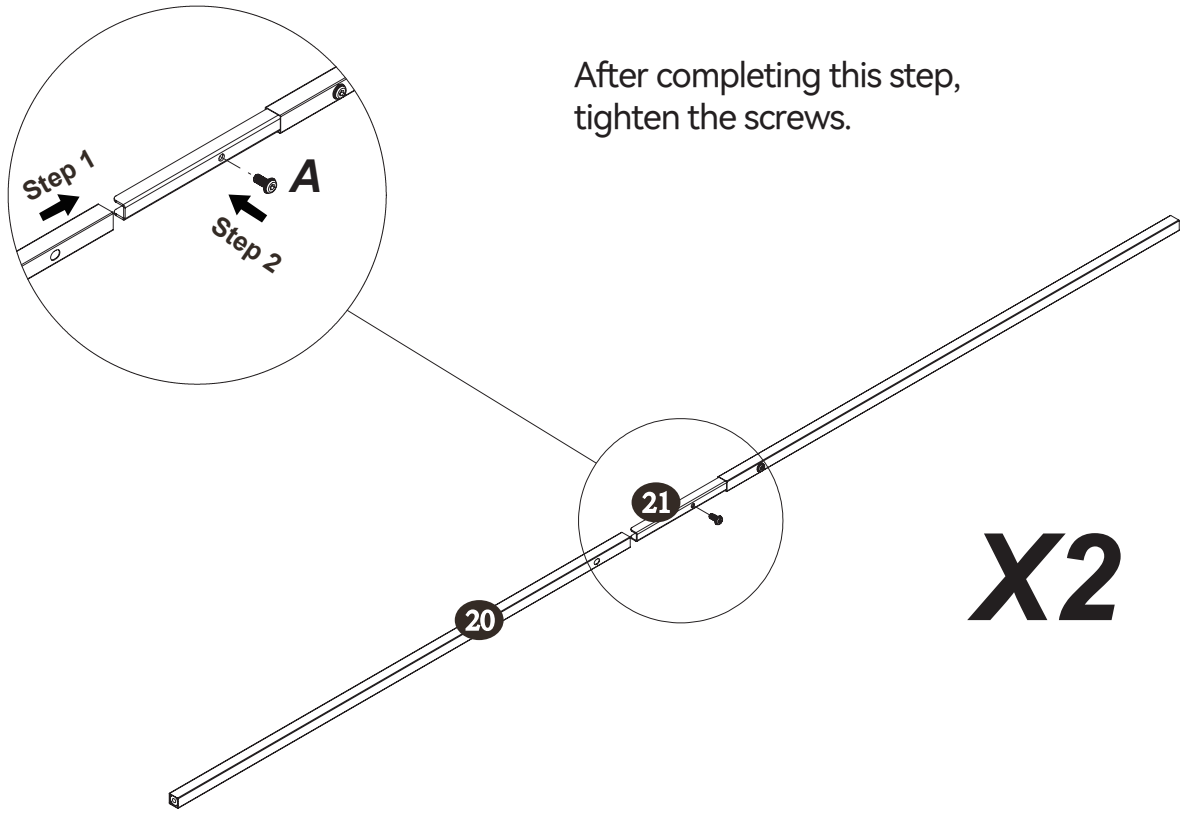

X2

A M8x18mm x2

16

The hole-facing side is downward.

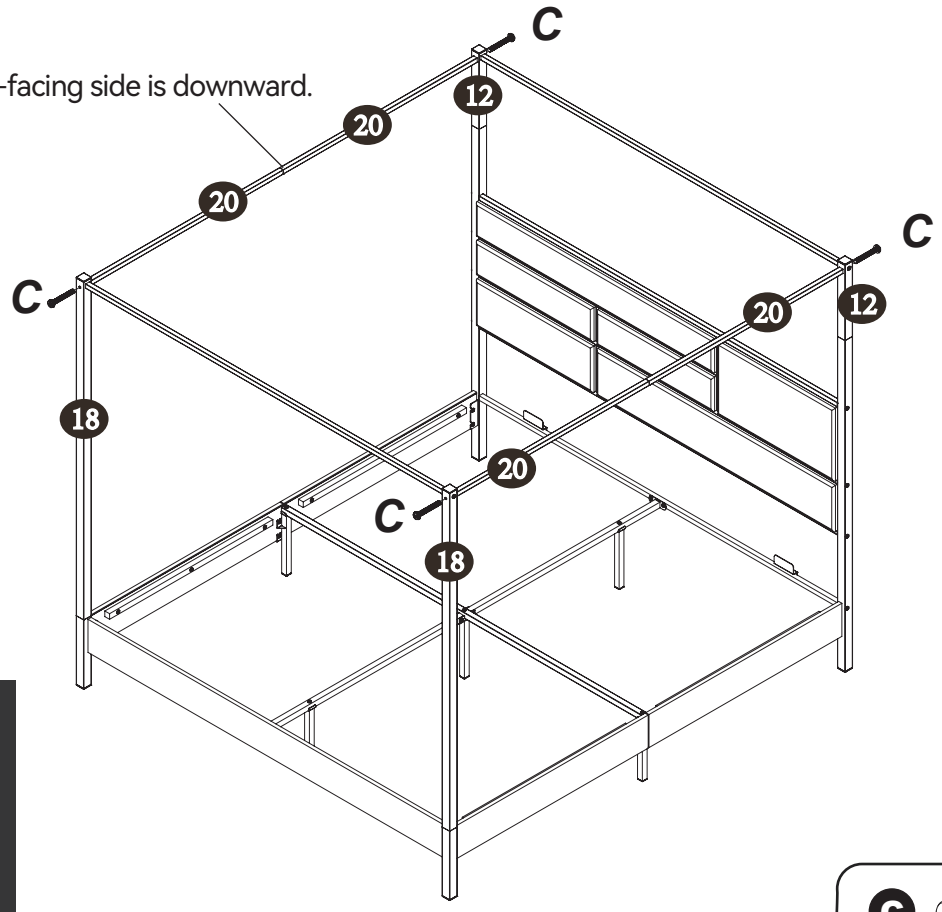

2 PERSON ASSEMBLE

C M8x55mm x4

17

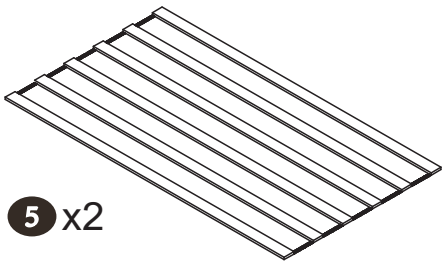

5 x2

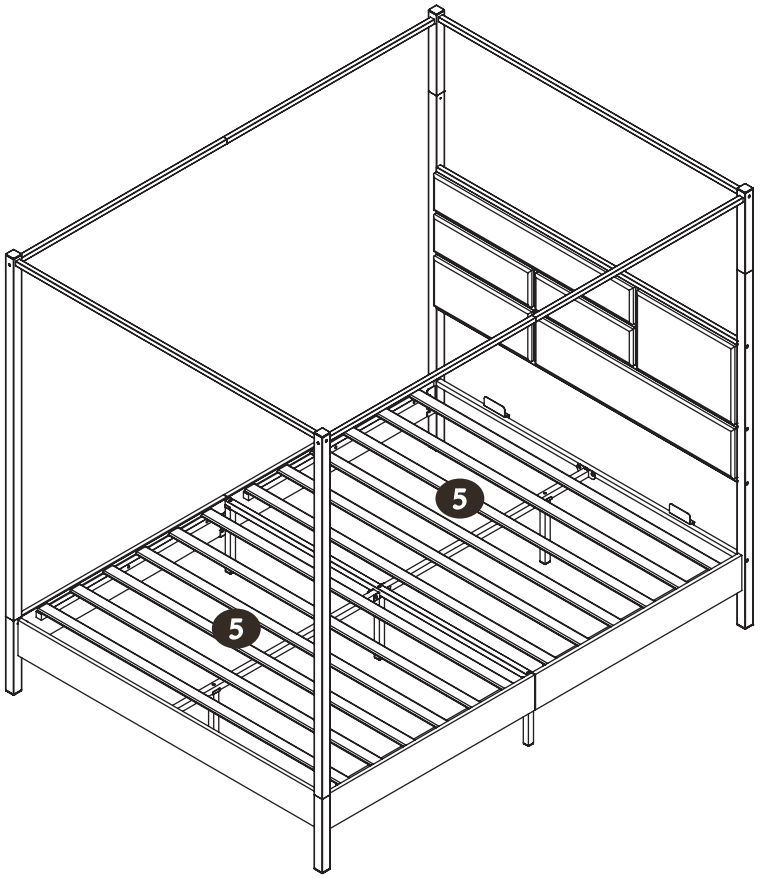

NOTICE:
RETURN/DAMAGE CLAIM INSTRUCTIONS:

- If there is a defect in the material or workmanship that is covered by this item's warranty, we will repair or replace it for you at no cost within a reasonable period of time.
- We reserve the right to request that damaged parts be returned to us.

Return Policy:

- If you have any questions concerning this warranty, please contact our Customer Service department.

Be prepared to provide your name, address, daytime phone number, the model and purchase order number of the product, date of the purchase, and the store where it was ordered.
All of this information provided by you will help us to track your order easily and solve your problem in the shortest time.

- This warranty gives you specific rights, and you still possess other rights, which vary from case to case.
- In the end, we hope you can enjoy our product.

We wish you and your family a wonderful life.