Instruction Manual

Left Arm Chaise

196861052514
196861052620

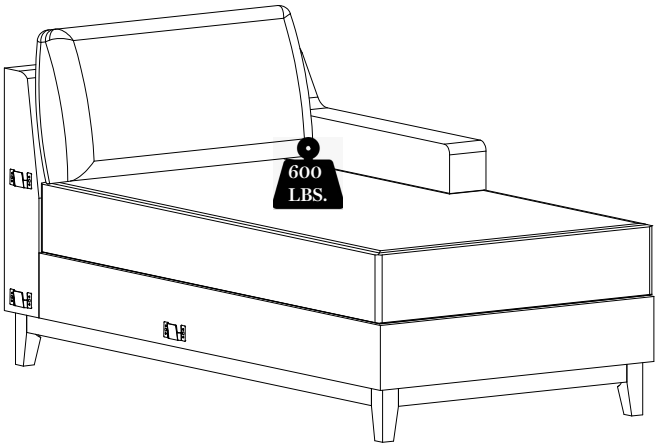

ASSEMBLY INSTRUCTIONS

Before You Begin:

Please identify all component parts and hardware pieces required before you begin. Carefully remove all of the components from the packaging and set aside for assembly. Assemble on a soft surface to prevent scratching during assembly.

Caution:

Tighten all components securely before use. Failure to do so may result in personal injury.
DO NOT use any sharp objects to open plastic wrapped components as damage to product or components may result.

Warning:

CHOKING HAZARD - Small Parts. Adult Assembly Required.

Serious or fatal injuries can occur from furniture tipping over. You must install Tipping Restraint Hardware (where included) to help prevent the unit from tipping and causing accidental injury, instability, death or damage. The tipping restraint is intended only as a safety measure, it is not a substitute for proper adult supervision. To help prevent furniture from tipping over it must be permanently attached to the wall. Anti-Tip Safety Wall Straps suitable for the unit weight and wall materials (if not included) should be purchased and installed.

Failure to detach this restraint before moving furniture may result in injury or damage.

DO NOT ALLOW CHILDREN TO CLIMB ON FURNITURE

Customer Service Email: CustomerExperience@theubiquegroup.com | Phone: 866-552-2810

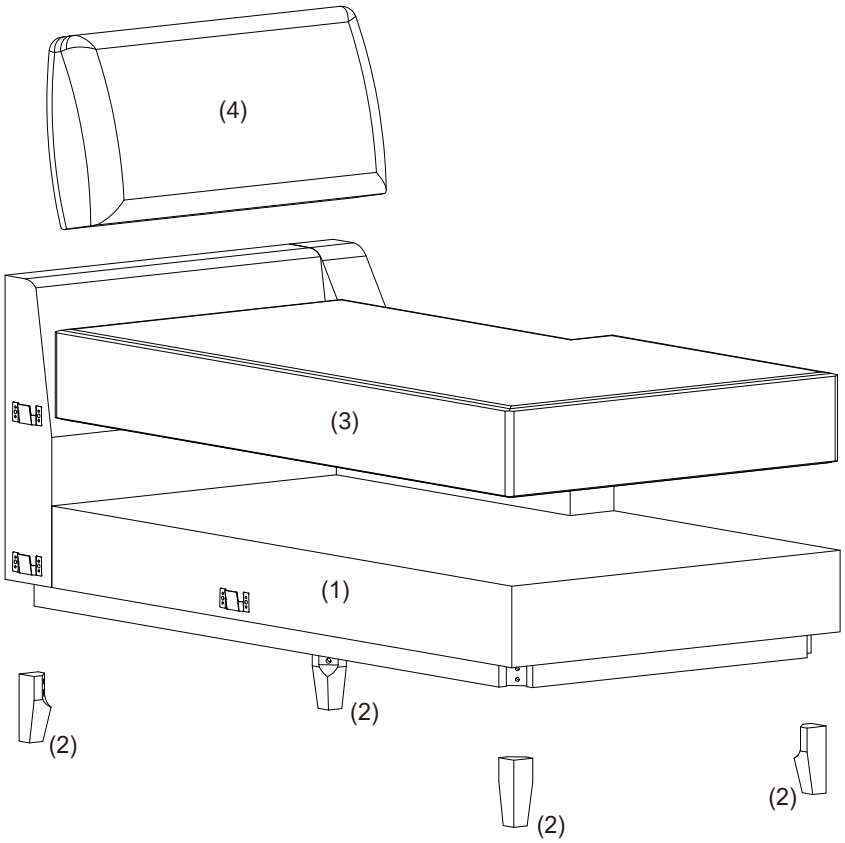

PARTS

(1)X1	(2)X4	(3)X1	(4)X1
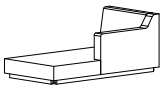		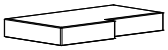	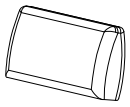
Seat	**Leg**	**Seat Cushion**	**Back Cushion**

HARDWARE

(A)X8	(B)X8	(C)X8	(D)X1
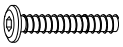			
JCBC Bolt M6 x 60mm	**Flat Washer** M6	**Spring Washer** M6	**Allen Wrench** M4

STEP 1

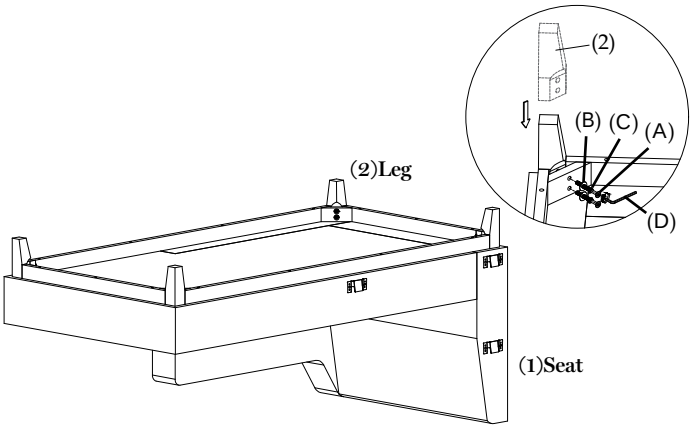

STEP 2

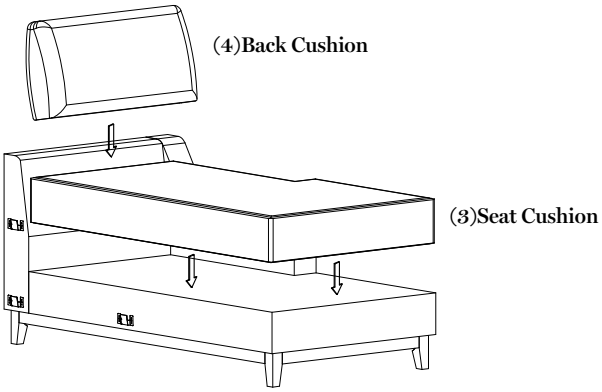

To connect to other pieces in the collection (Not Included) slightly lift the seat and insert the side brackets into the receiver brackets on the other piece.

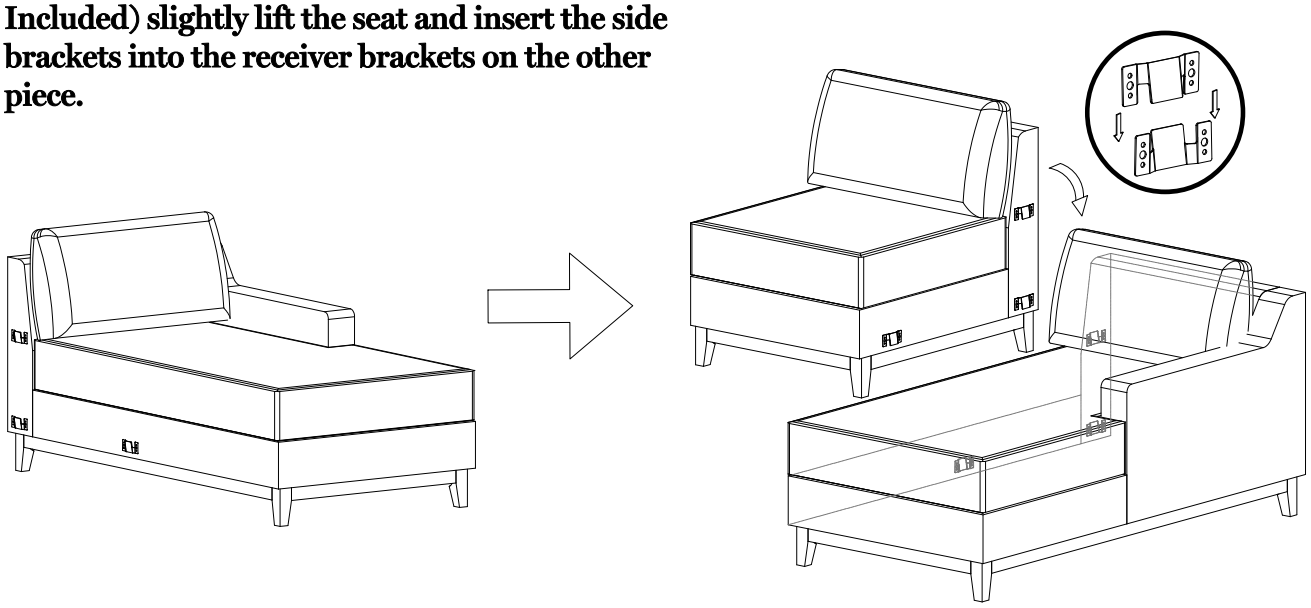

Quality and Safety Guidelines

- Please follow the static and dynamic weight capacity limits provided on this item. If you are unsure of the weight capacities for this product, email us at customerexperience@theubiquegroup.com or call 866-552-2810.
- Do not use this item if any instability is detected.
- This item is intended for use as a chair only, do not climb, sit, or stand on this item.
- Do not push or pull this item to move it, team lift to reposition.
- The item is intended to be used indoors.
- For maintenance instructions and replacement parts, please email us at customerexperience@theubiquegroup.com or call 866-552-2810.
- Please review and retain all assembly instructions, safety and quality guidelines and product warnings for future reference.
- For product longevity, product safety and product integrity, protect from wet or humid weather and store indoors in a dry location. For additional storage instructions, please email us at customerexperience@theubiquegroup.com or call 866-552-2810.
- Please visit www.theubiquegroup.com for our product warranty details or email us at customerexperience@theubiquegroup.com or call 866-552-2810.
- Please inspect this product regularly to make sure there are no damaged or worn parts. Also inspect to make sure all hardware is tightened correctly and securely. For inspection instructions, please email us at customerexperience@theubiquegroup.com or call 866-552-2810.
- If any parts are damaged or worn, please stop using the product. Repair this product with manufacturer supplied parts only.