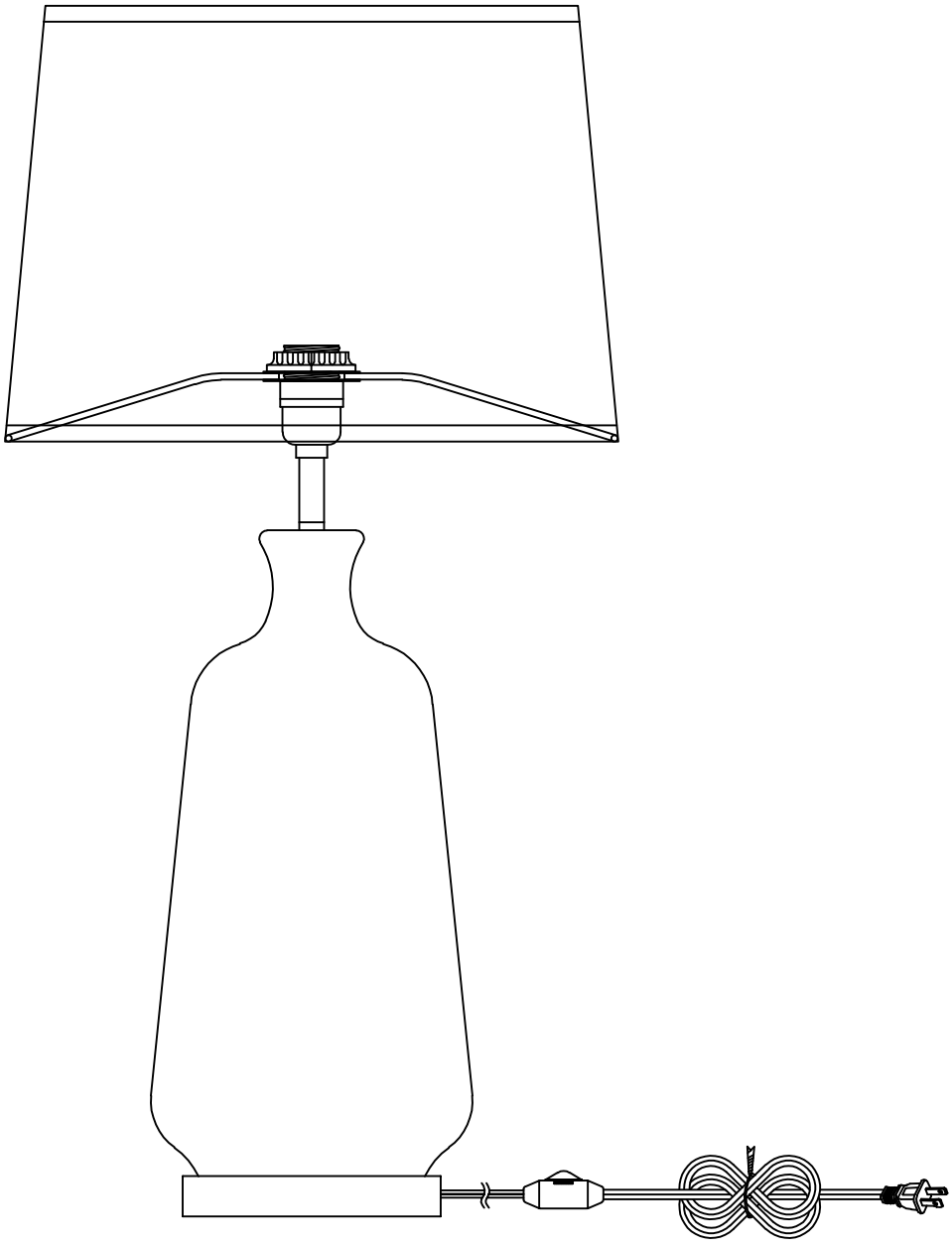

Assembly Instructions

Shade Assembly Instructions

A:Shade 1PC	B:Ring 1PC	C:Ring 1PC
		

Shade Steps

steps 1

Velcro Flxed

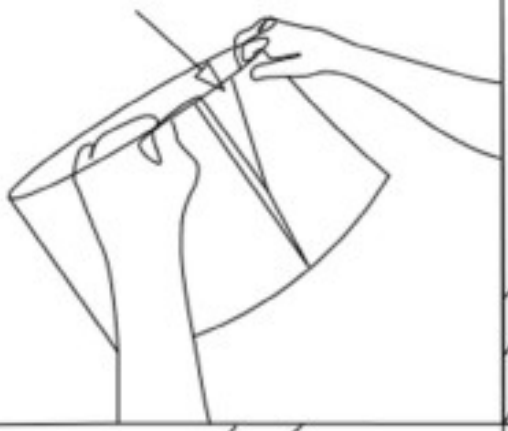

steps 2

Ring-B

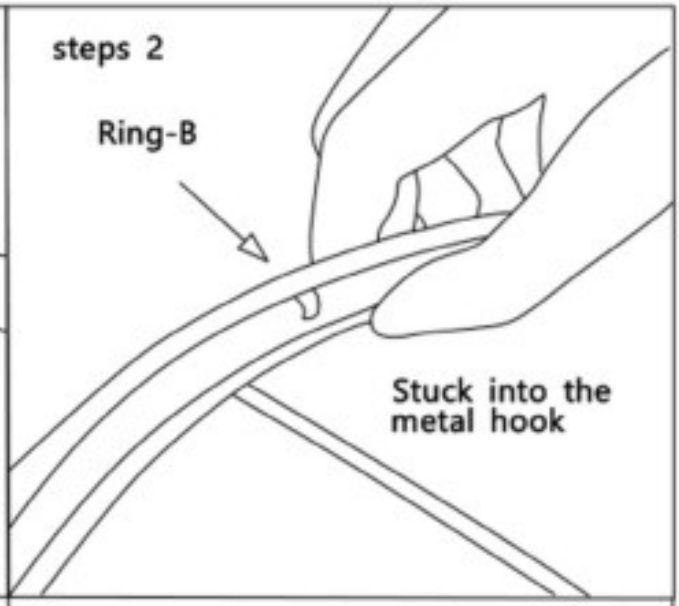

steps 3

Ring-C

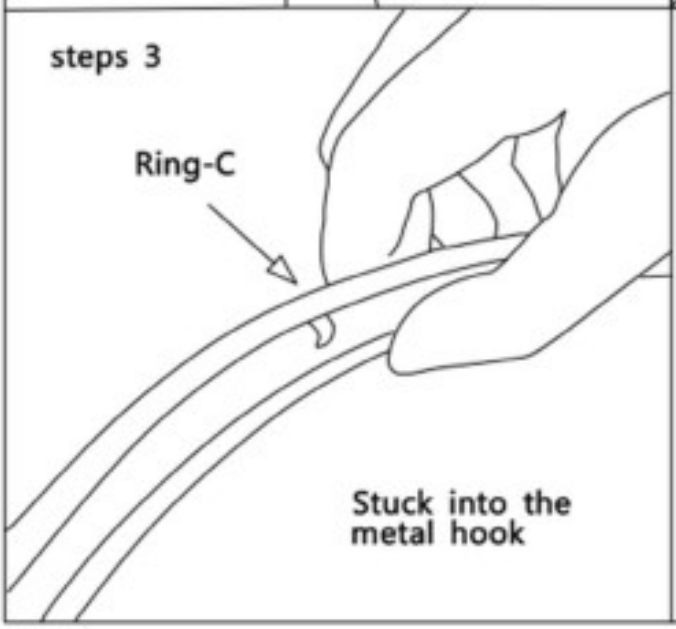

steps 4



Complete

Table Lamp
Assembly Instructions

1.Screw the bushing under the socket onto the fixture

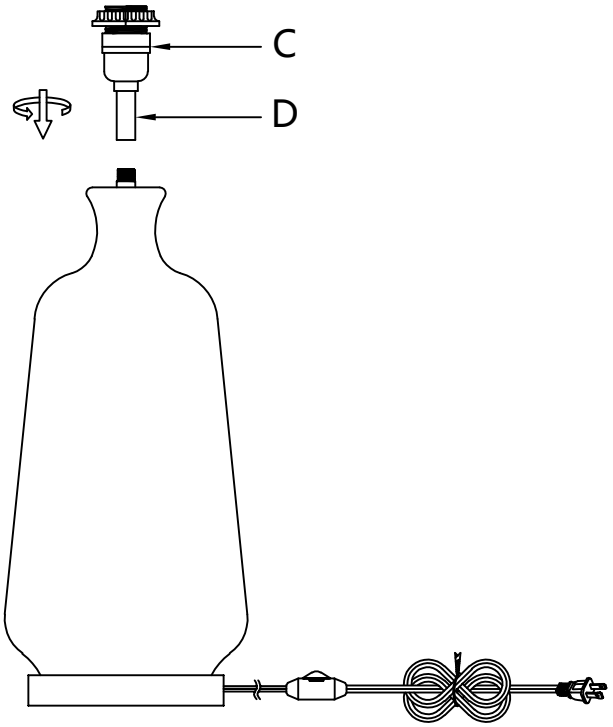

2.Unscrew the outer ring of socket

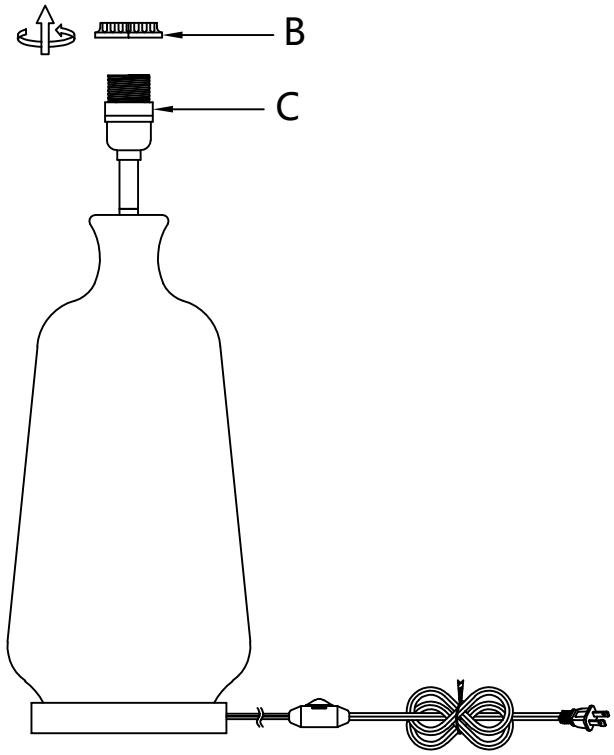

3.Put the shade on the socket,Then screw the socket ring to the socket.

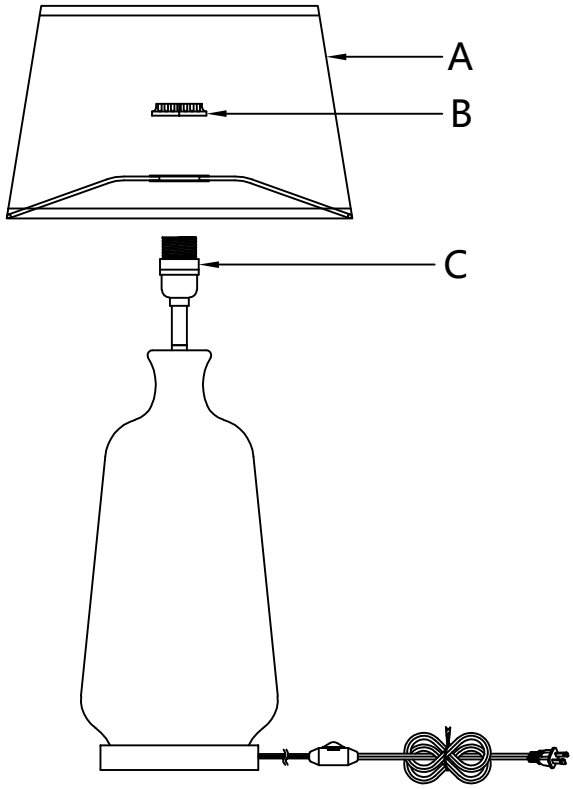

4.Install the bulb(Not Included).

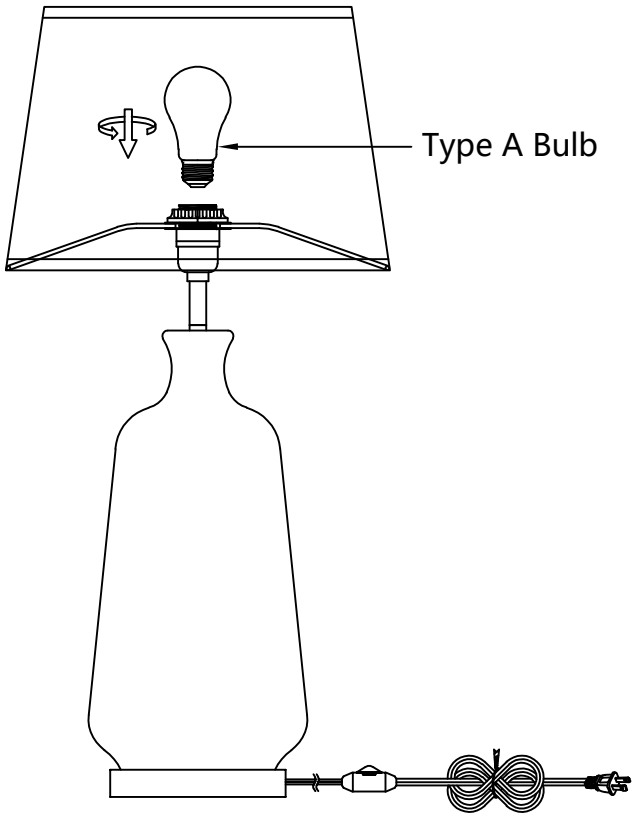

Table Lamp
Assembly Instructions

Important Safety Instructions:

- These instructions are provided for your safety. It is very important that they are read carefully and completely before beginning the assembly and installation of this lighting fixture.
- If the flexible cable or cord of this lighting fixture is damaged, it shall be exclusively replaced by the manufacturer or his service agent or a similar qualified person to avoid a hazard.
- This fixture has been rated for up to one **(1) E26 60W MAX. TYPE A standard light bulb** (not included). To avoid the risk of fire, do not exceed the recommended lamp wattage.
- This lamp is meant for indoor use.
- **Save these instructions.**

WARNING:

- **To reduce the risk of fire, electrical shock or personal injury, always turn off and unplug the light fixture and allow it to cool prior to replacing the light bulb.**
- **Do not touch bulb when fixture is turned on. Do not look directly at lit bulb.**
- **Keep flammable materials away from lit bulb.**

Pre-assembly:

- Remove all parts and hardware from box along with any plastic protective packaging.
- Do not discard any contents until after assembly is complete to avoid accidentally discarding small parts or hardware.

Care Instructions:

- Dust often using a clean, soft, dry and lint-free cloth.
- Blot spills and wipe with a clean, damp cloth immediately.
- We do not recommend the use of chemical cleansers, abrasives or furniture polish on our lacquered finish.
- Hardware may loosen over time. Periodically check to make sure all connections are tight. Re-tighten if necessary.