6 Drawers Tall Dresser

–Instruction Manual–

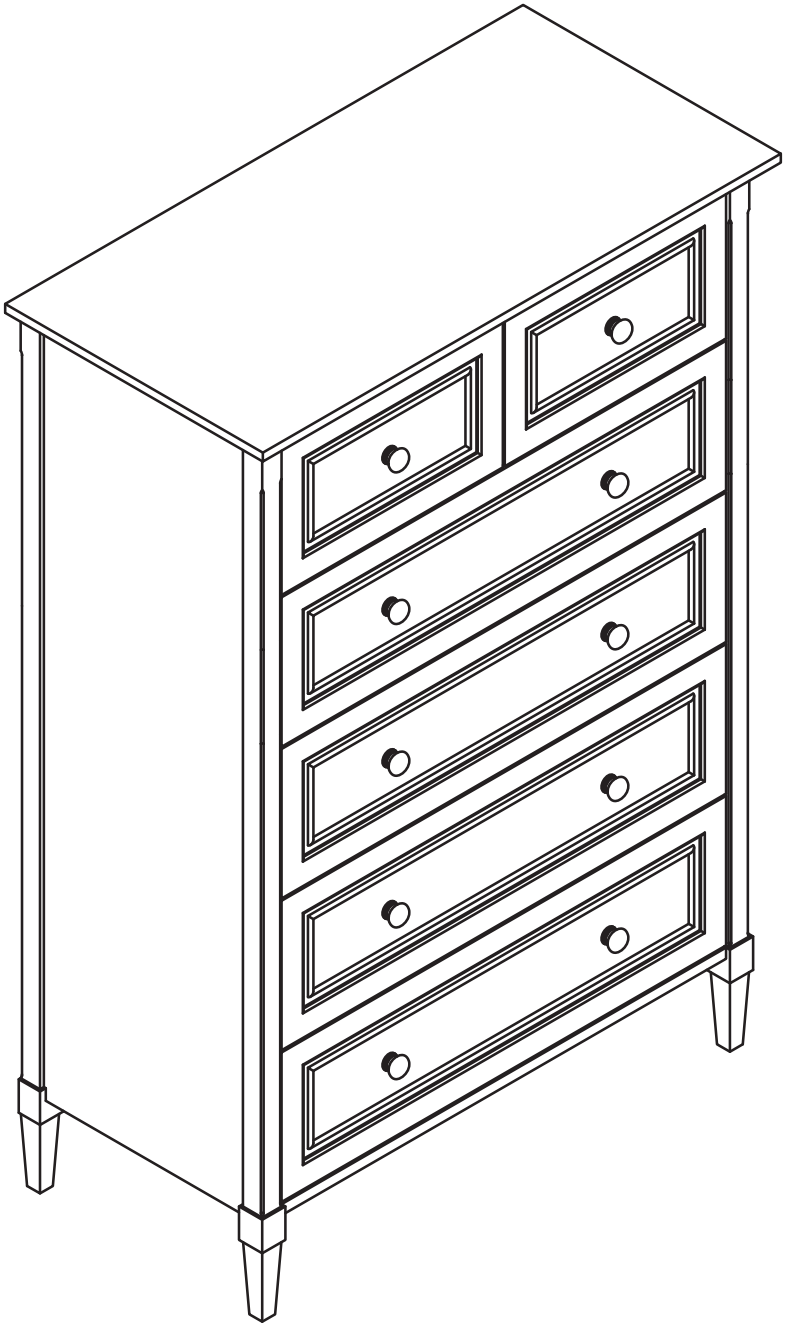

List Of Installation Parts

● Before installation, please check all parts for any missing components.

1 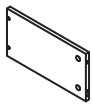 Drawer left side **6pcs**	*2* 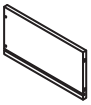 Drawer right side **6pcs**	*3* 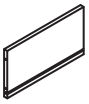 Upper drawerback **2pcs**	*4* 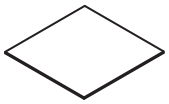 Upper drawer bottom **2pcs**
5 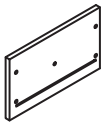 Upper left drawer front **1pc**	*6* 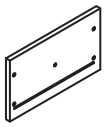 Upper right drawer front **1pc**	*7* 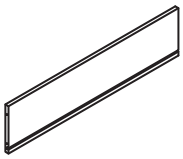 Lower drawer back **4pcs**	*8* 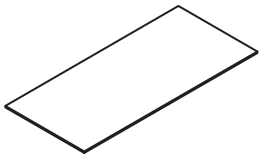 Lower drawer bottom **4pcs**
9 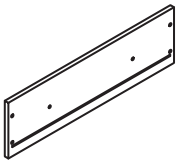 Lower drawer front **4pcs**	*10* 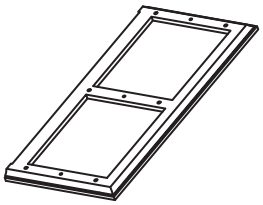 Top panel **1pc**	*11* 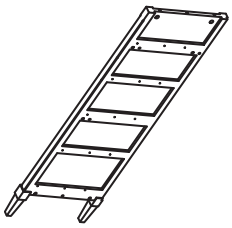 Left side **1pc**	*12*  Right side **1pc**
13 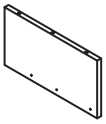 Divider **1pc**	*14* 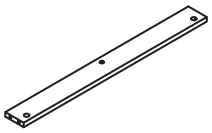 Upper front crosspiece **1pc**	*15* 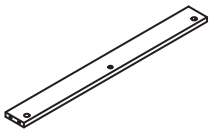 Upper rear crosspiece **1pc**	*16* 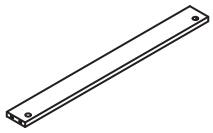 Lower crosspiece **1pc**
17 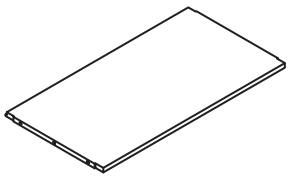 Bottom panel **1pc**	*18* 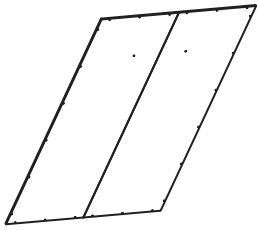 Back panel **1pc**		

List Of Installation Parts ● Before installation, please check all parts for any missing components.

A 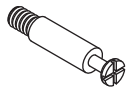 Camlock bolt **40pcs**	***B***  Camlock **40pcs**	***C*** Φ 8x30mm  Wooden dowel **13pcs**	***D*** Φ1/4″x1 1/8″  Bolt **2pcs**	***E***  Allen wrench **1pc**
F Φ4x25mm  Flat head screw **24pcs**	***G***  Knob **10pcs**	***H*** Φ5/32″x 5/8″  Machine screw **10pcs**	***I*** Φ 3x12mm  Wood screw **48pcs**	***J*** Φ 3x12mm  Back screw **26pcs**
K  Safety wall strap **1pc**	***L***  Plastic anchor **1pc**	***M*** Φ4x38mm  Mounting screw **1pc**	***N***  Washer **1pc**	***CL***  Left slider of cabinet **6pcs**
DL  Left slider of drawer **6pcs**	***CR***  Right slider of cabinet **6pcs**	***DR*** 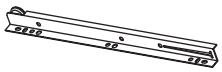 Right slider of drawer **6pcs**		

Tips

This furniture requires 2 people to assemble.
Make sure no parts missing or damaged before assembly.

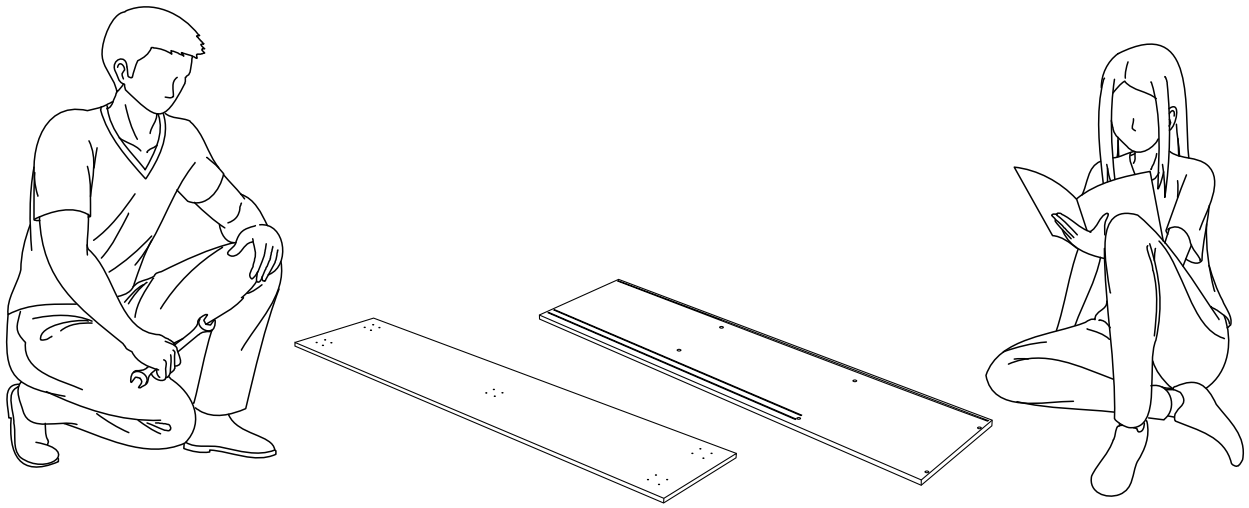

Cam Bolt Installation As Below

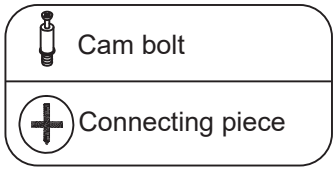

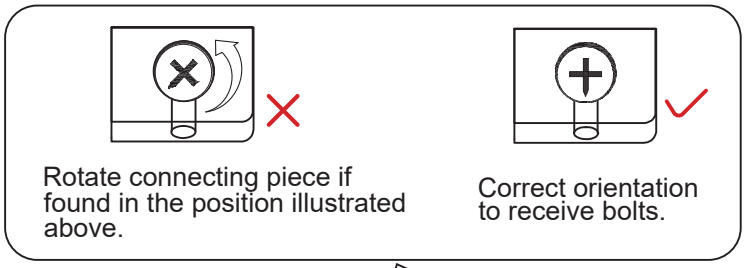

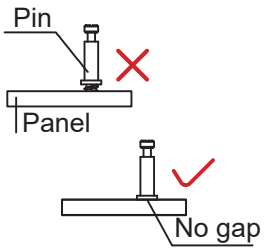

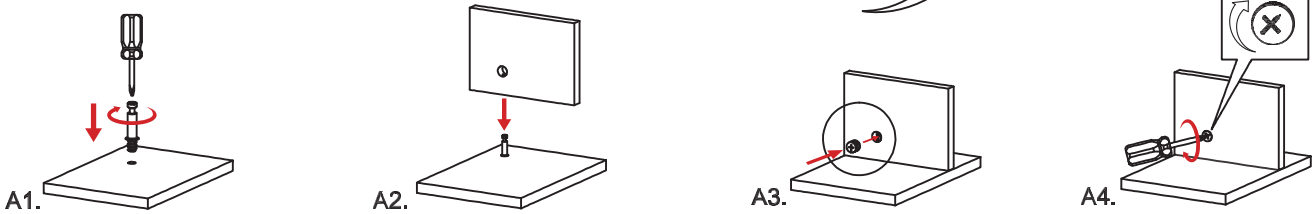

YOU MAY NEED (NOT SUPPLIED)

CAUTION: Please confirm the parts list before installation.



Step:1

A: 4PCS B: 4PCS F: 4PCS G: 1PC

H: 1PC I: 24PCS DL: 6PCS DR: 6PCS

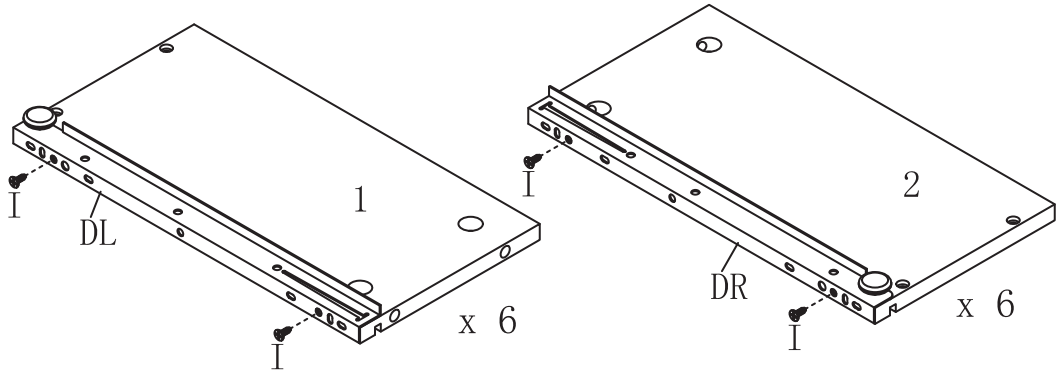

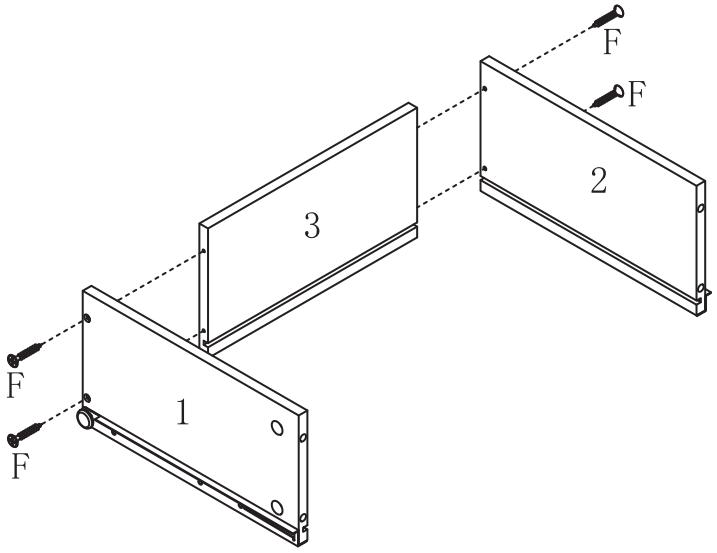

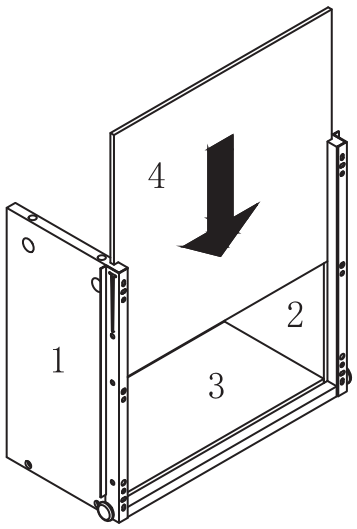

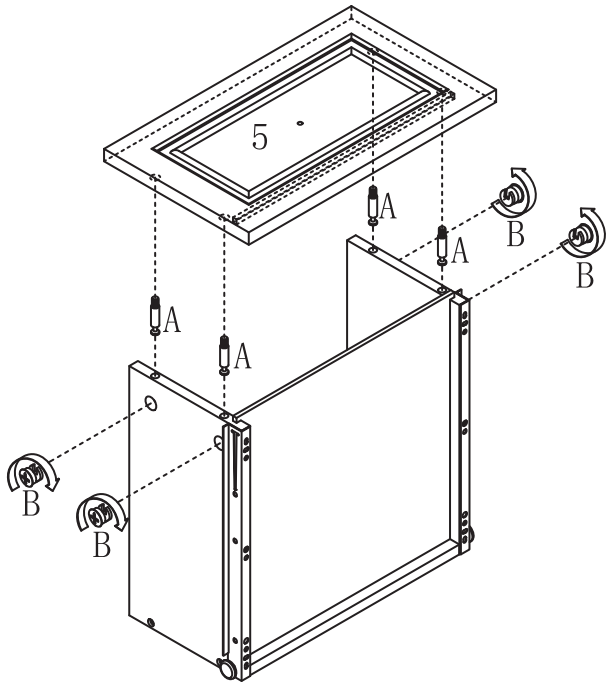

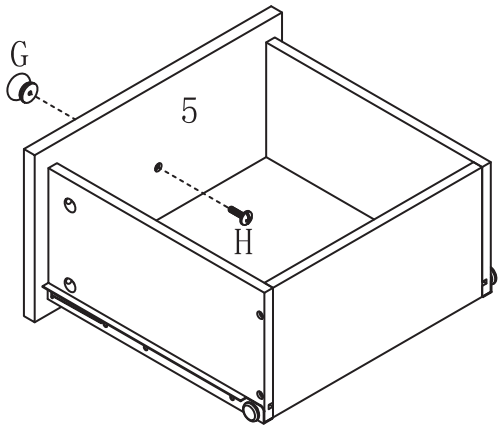

Step:2

A:	4PCS	B:	4PCS	F:	4PCS
G:	1PC	H:	1PC		

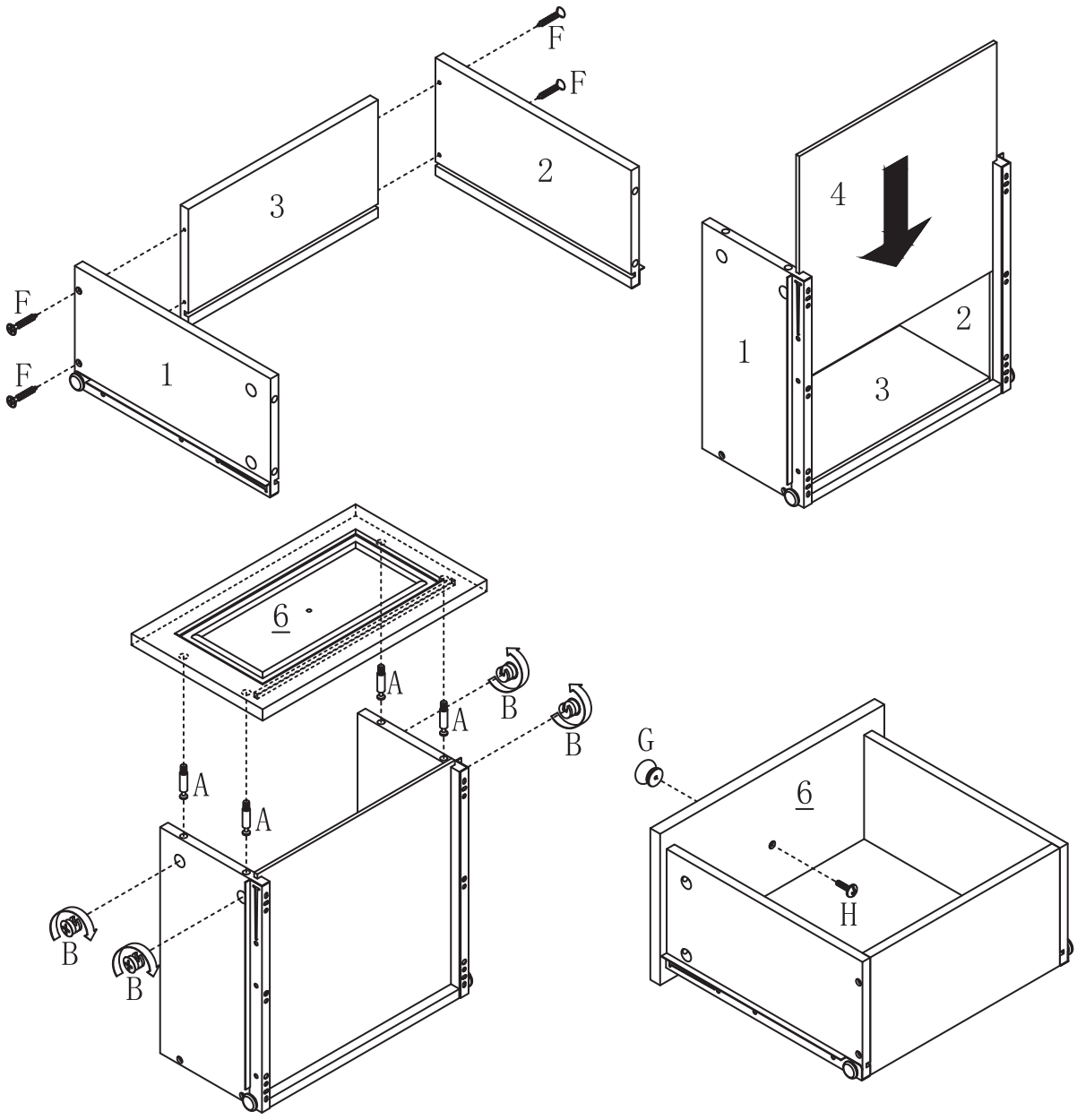

x 4

Step:3

A: 16PCS B: 16PCS F: 16PCS

G: 8PCS H: 8PCS

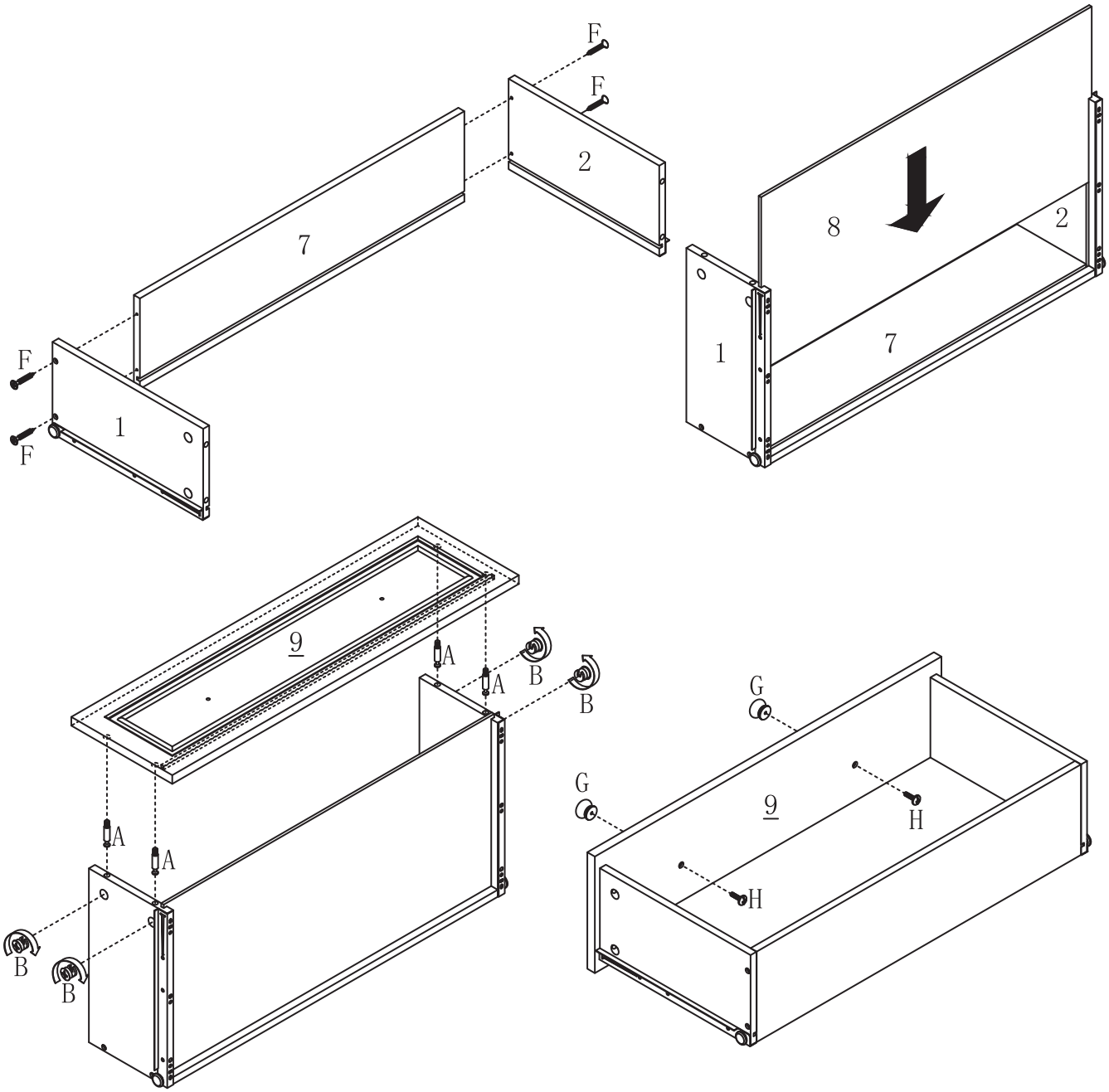

Step:4

I: 20PCS CL: 5PCS CR: 5PCS

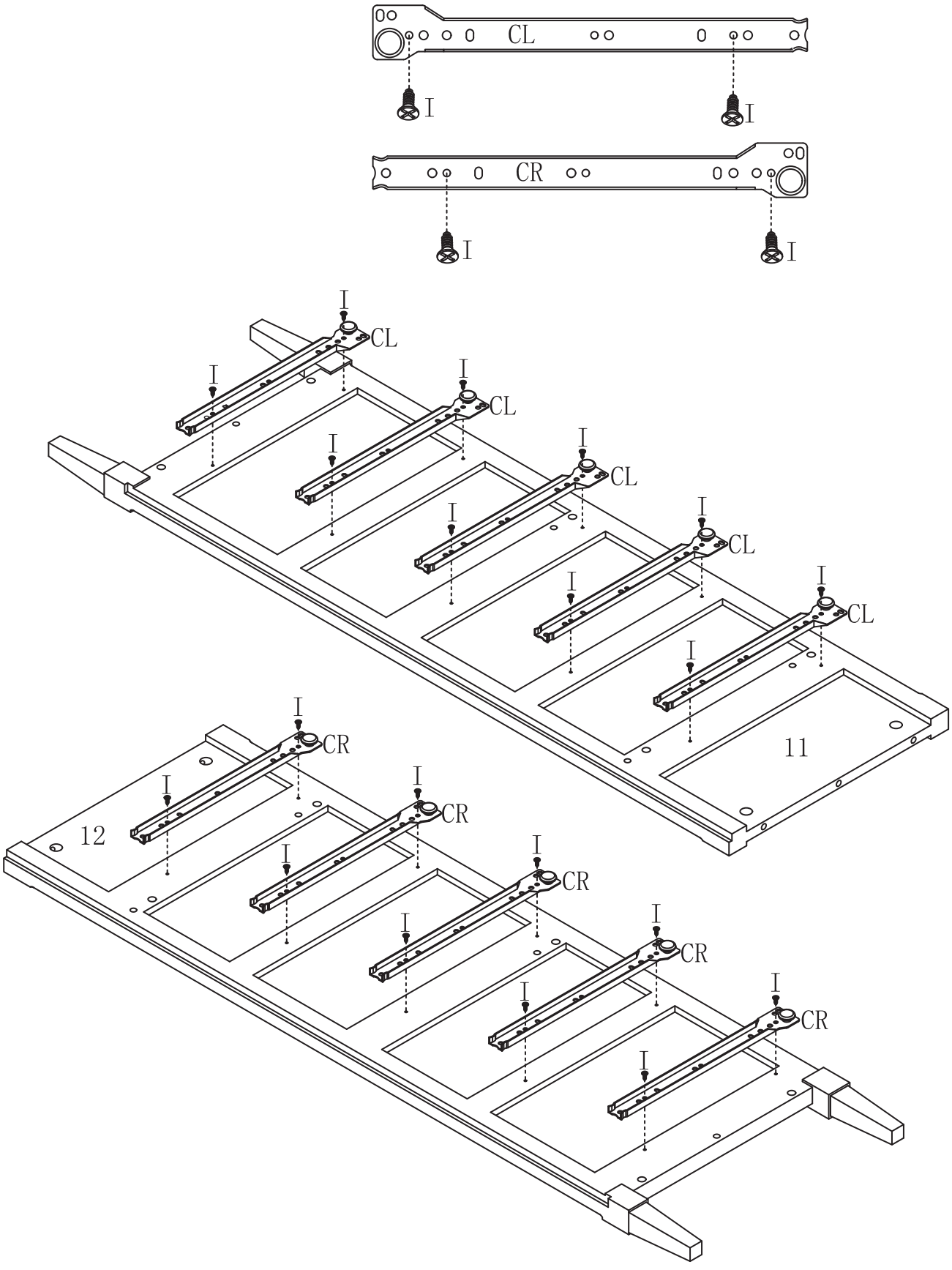

Step:5

I: 4PCS CL: 1PC CR: 1PC

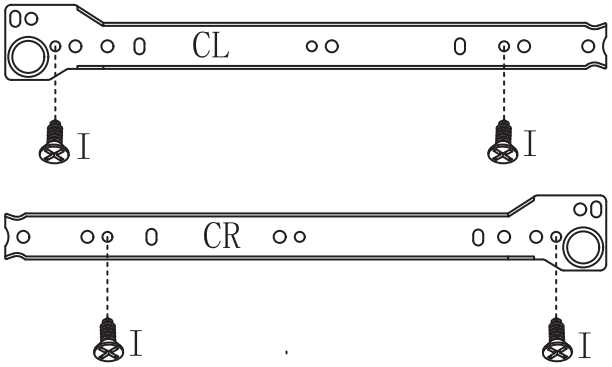

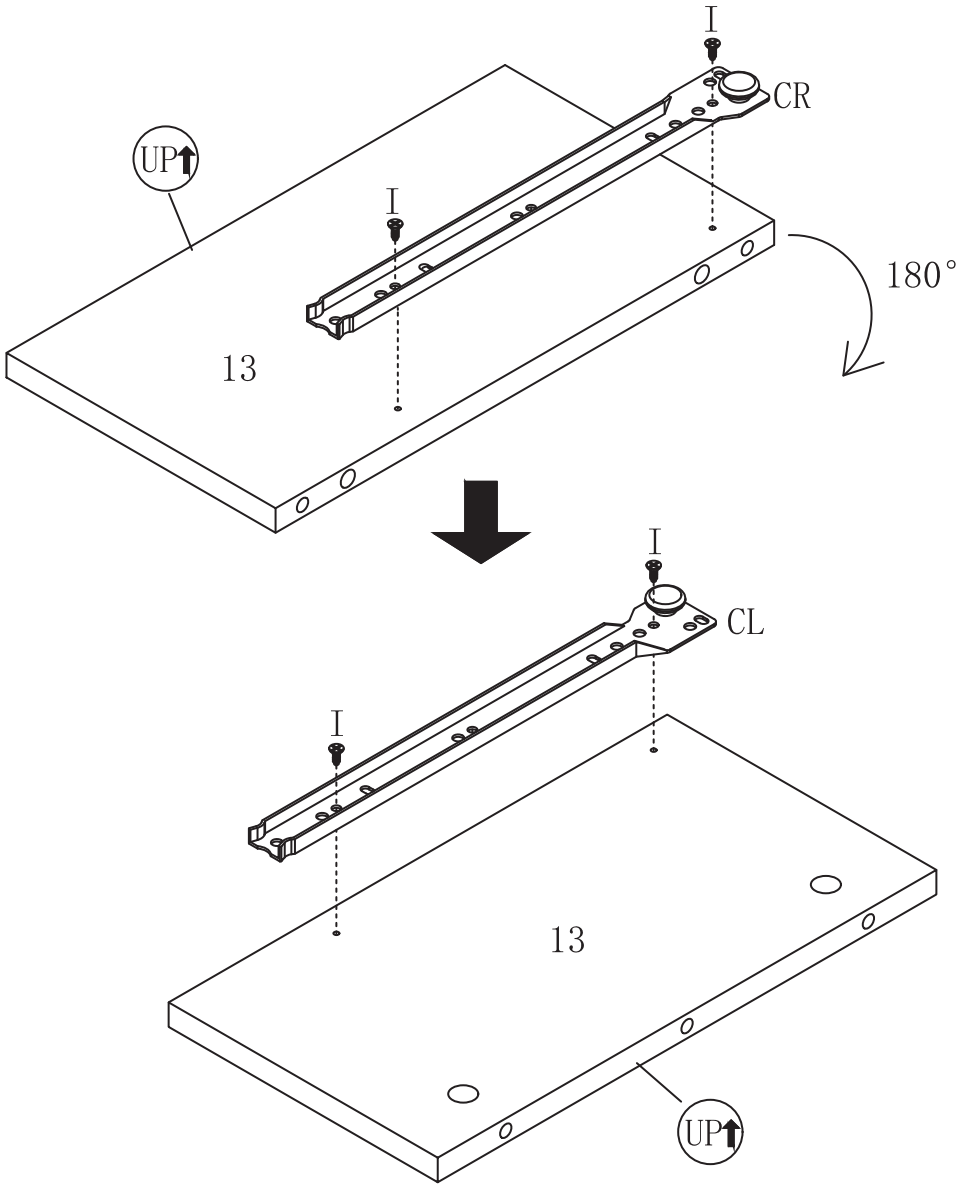

Step:6

C: 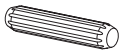 2PCS D:  2PCS E:  1PC

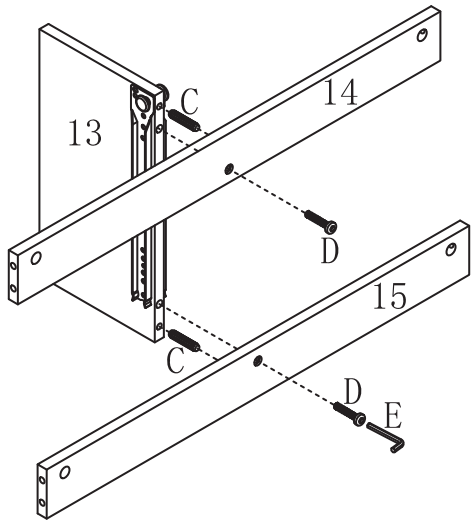

Step:7

A: 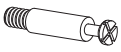 5PCS B:  5PCS C: 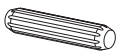 4PCS

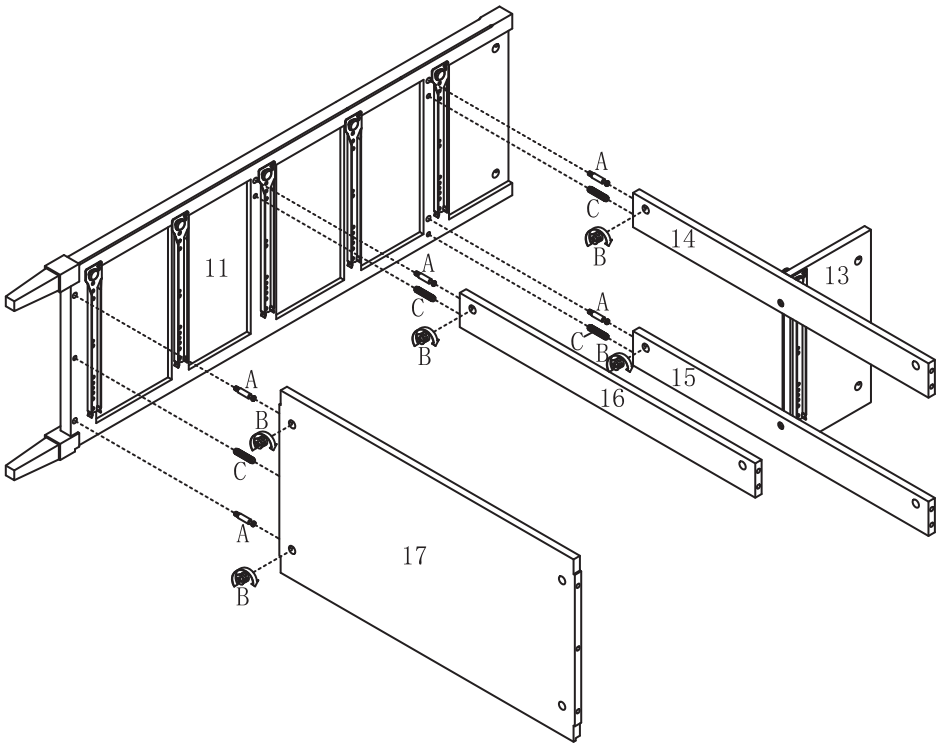

Step:8

A: 5PCS B: 5PCS C: 4PCS

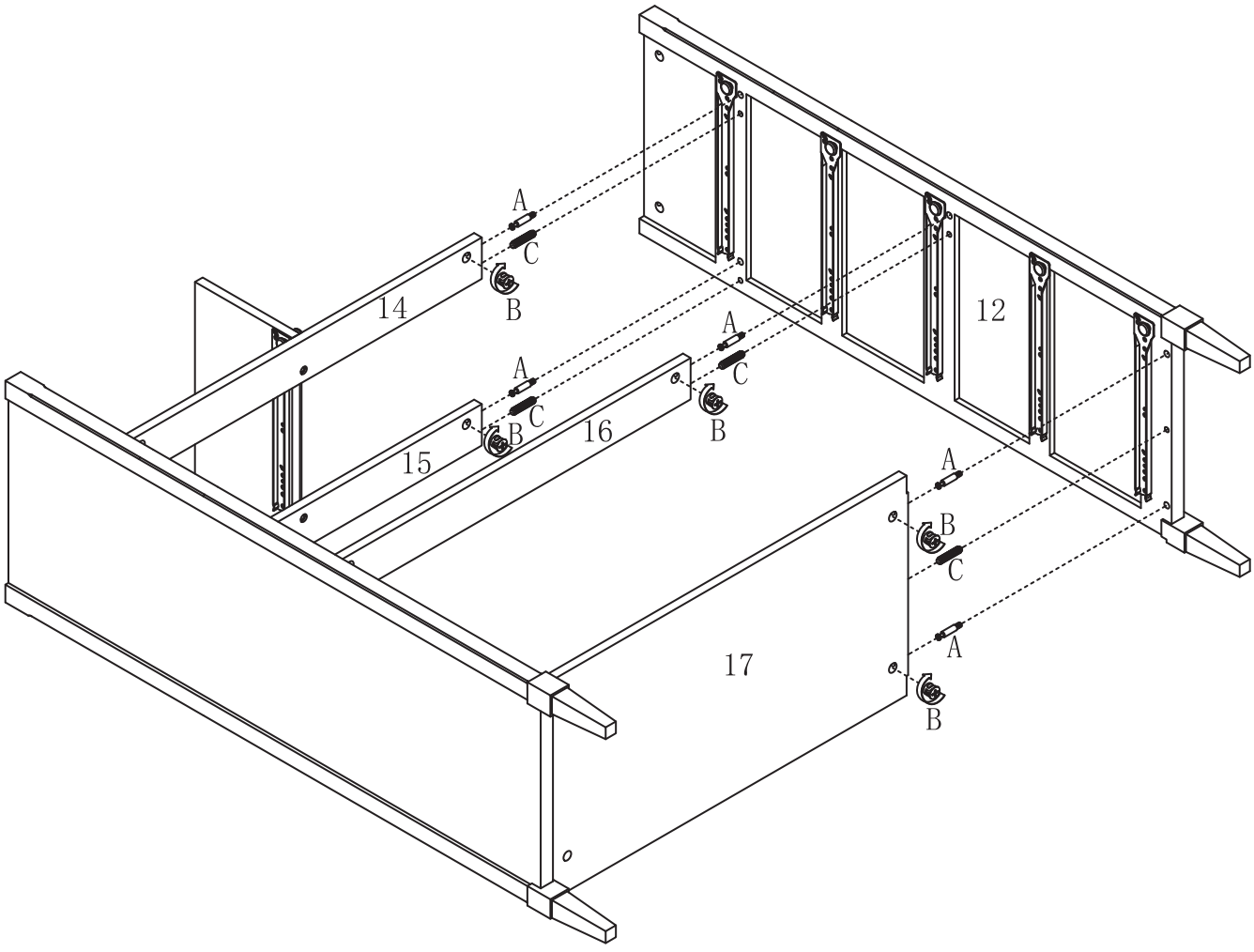

Step:9

A: 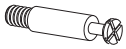 6PCS B:  6PCS C: 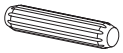 3PCS

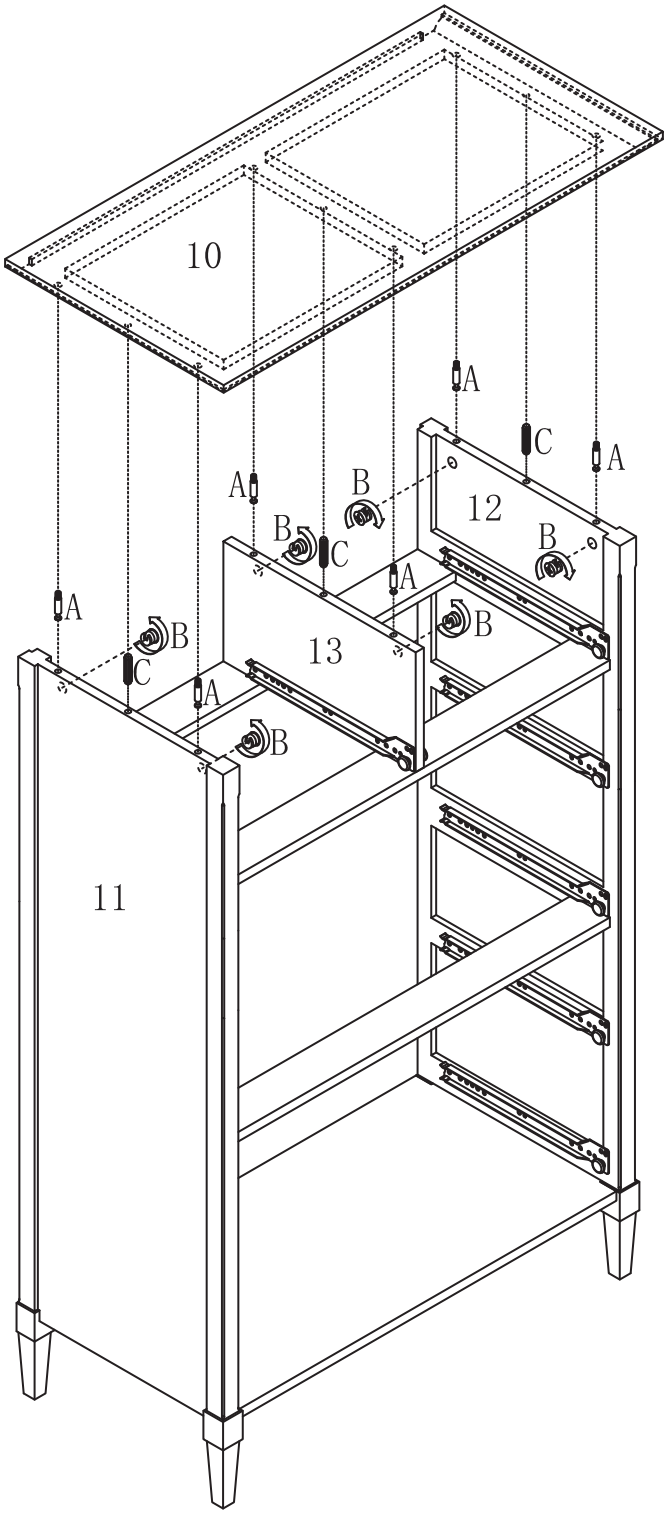

Step:10

J: 26PCS K: 1PC

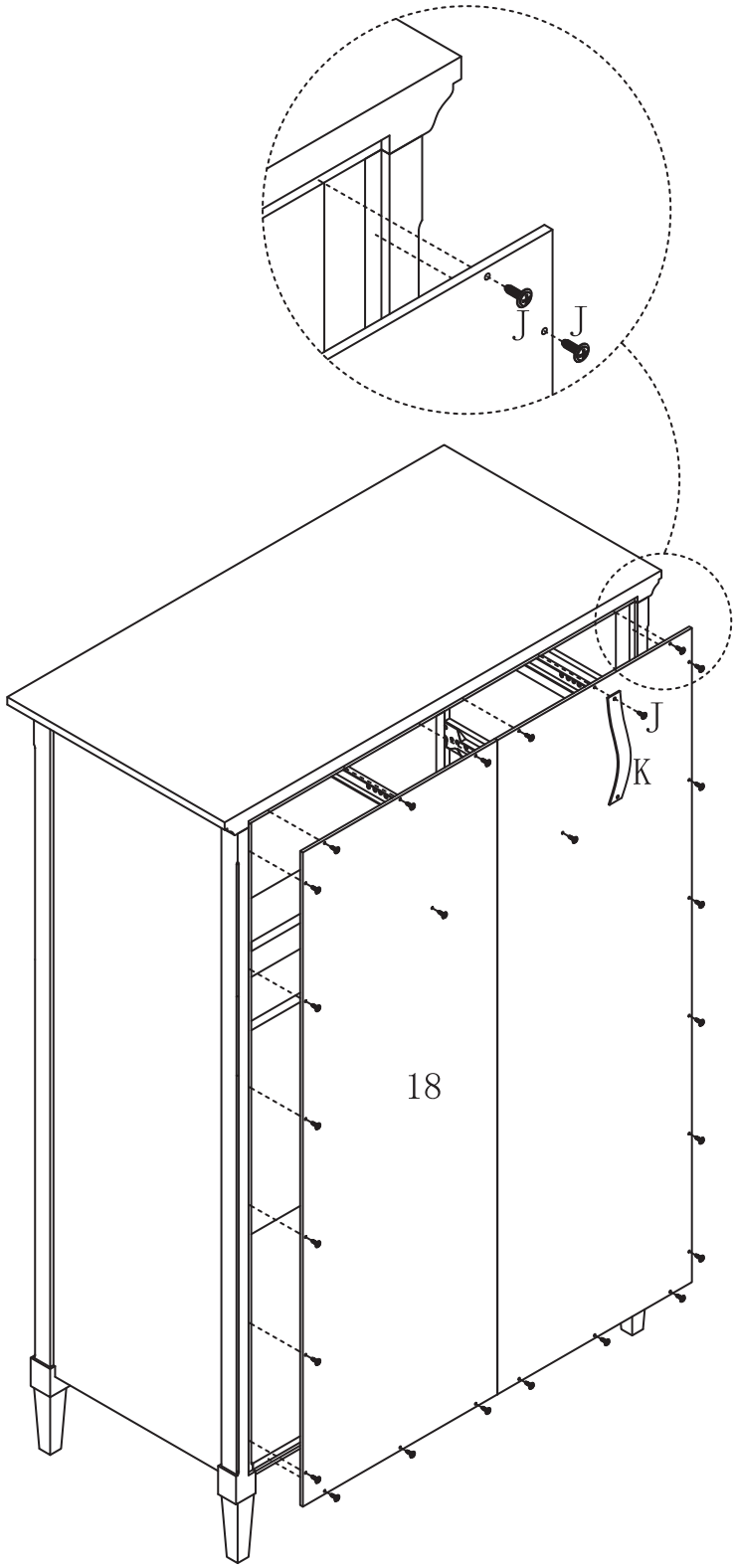

Step:11

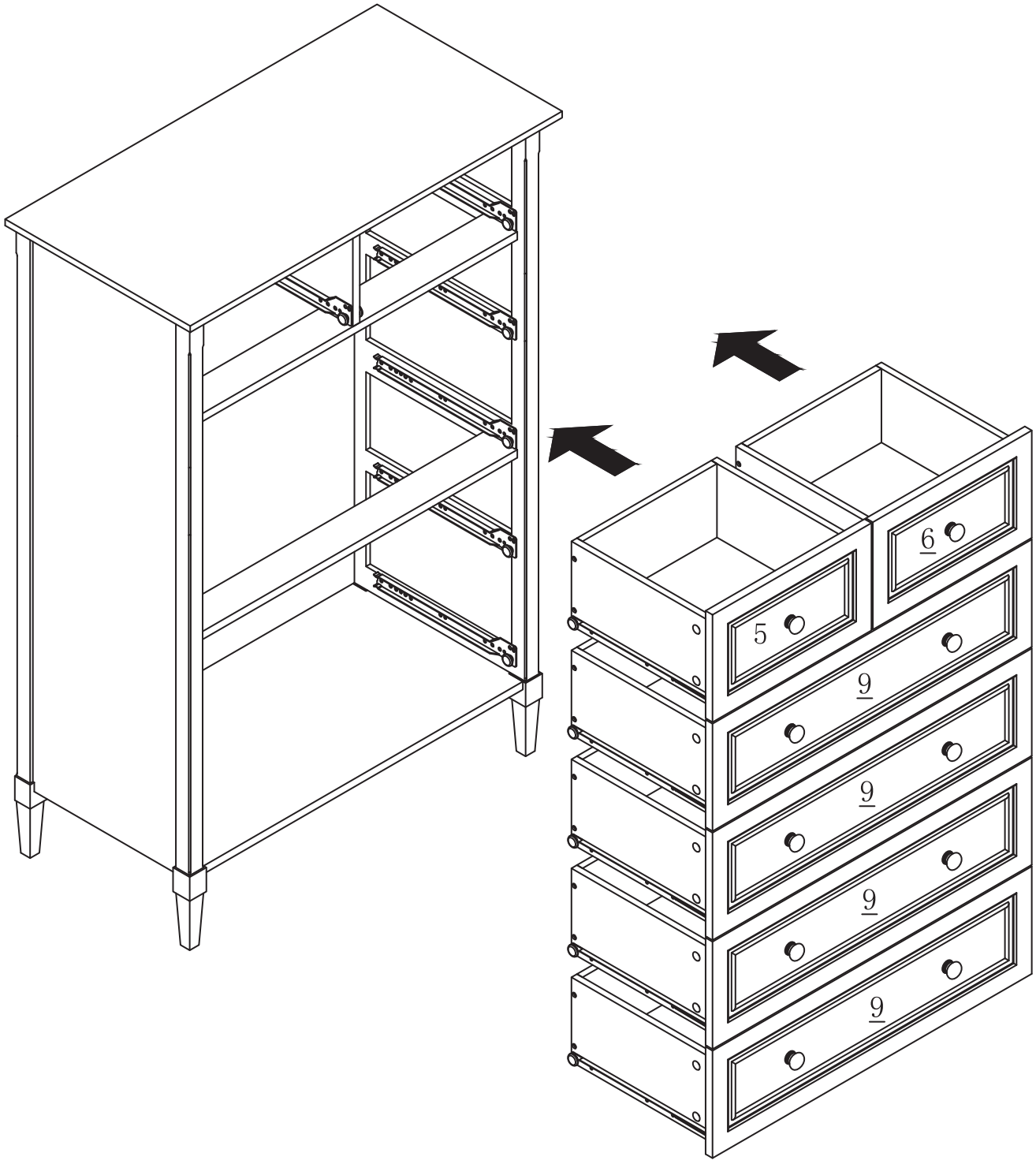

Step:12

L:  1PC M:  1PC N:  1PC

