ASSEMBLY INSTRUCTIONS

Thank you for purchasing our product.
We appreciate your trust and hope you enjoy your new furniture.

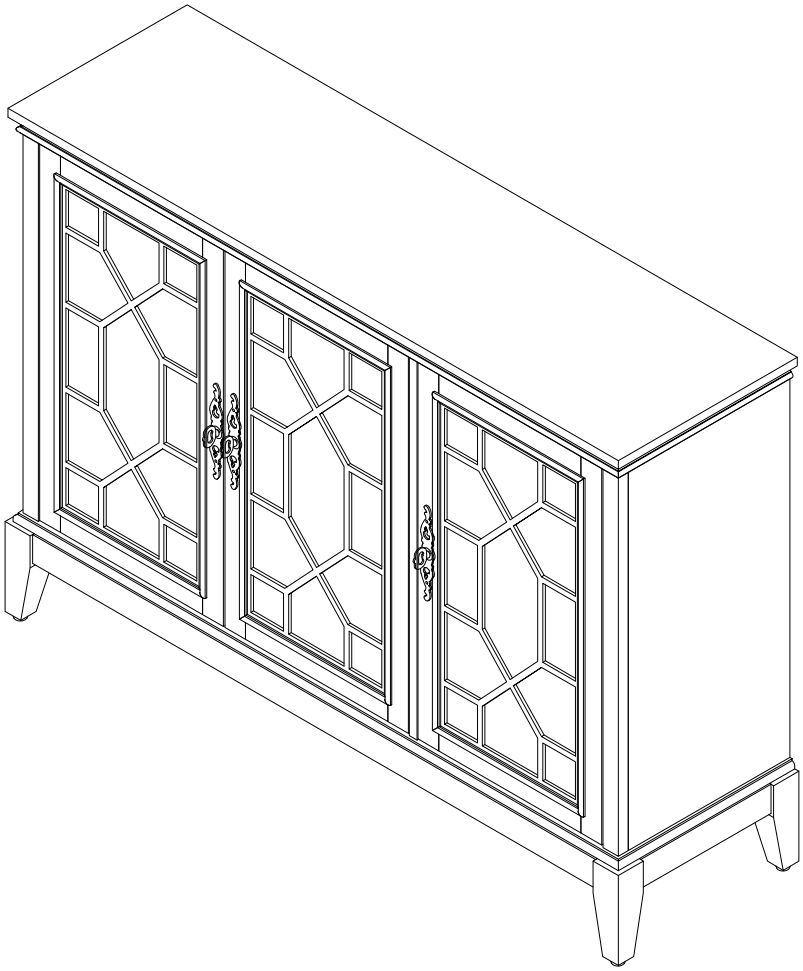

Notice：

1.Place a protective mat or cloth on the floor to prevent scratches.
2.Follow these assembly instructions. Make sure all parts and hardware are included before starting.
3.Do not fully tighten the bolts during assembly.Tighten them only after all parts are properly aligned.
4.If you have any questions, please contact our customer support team or call us directly.

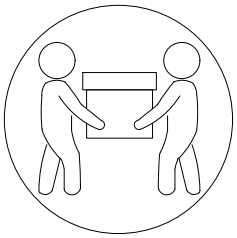

Recommended Assembly: 2 people

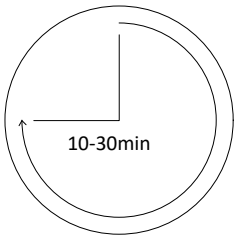

Estimate installation time

Assembly Explosion Diagram

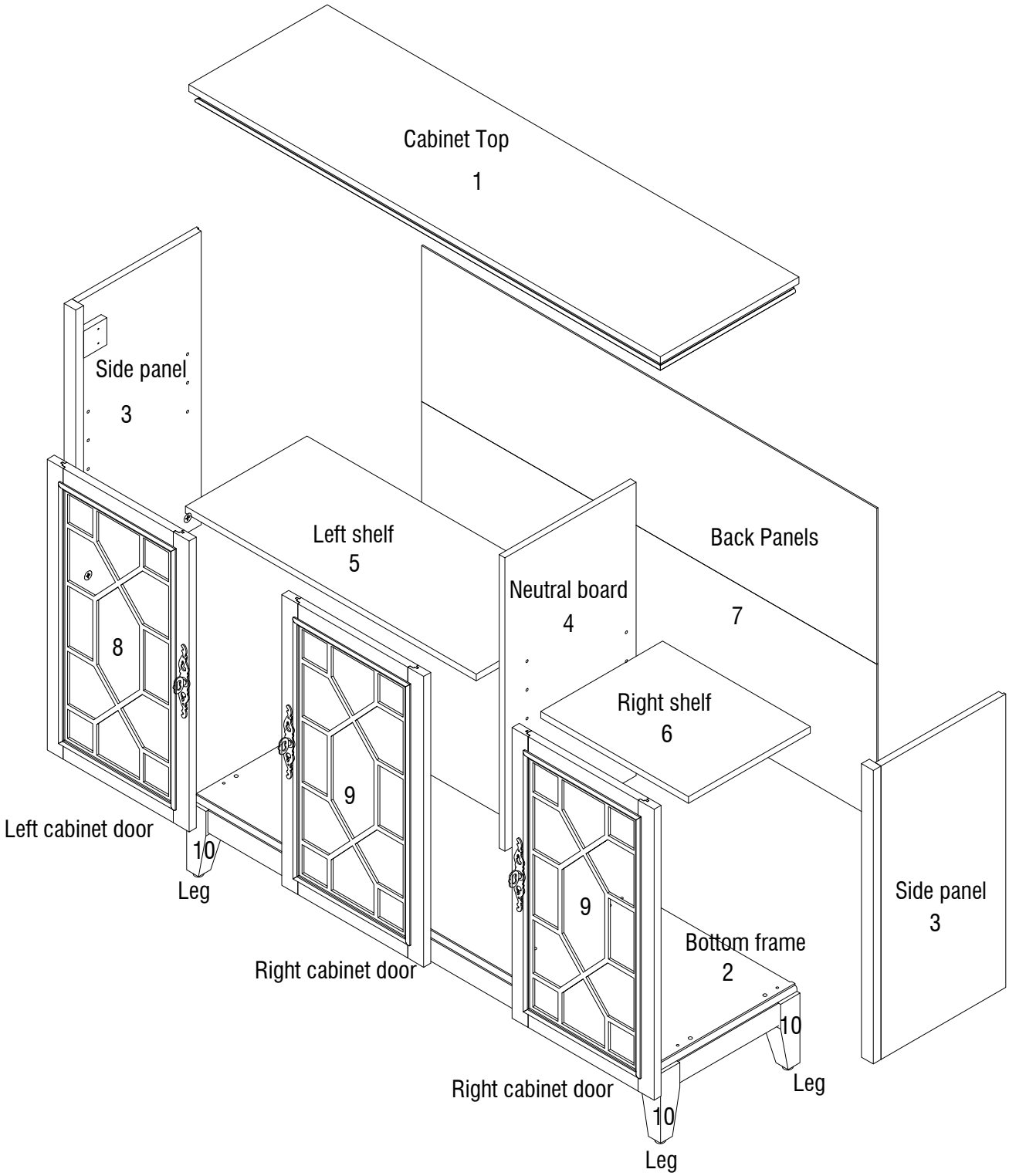

Accessories List

Item no.	Reference Image	Qty
1	Cabinet Top 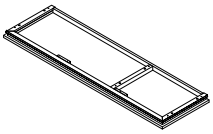	1
2	Bottom frame 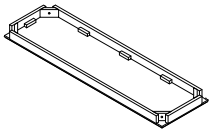	1
3	Side panel 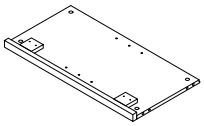	2
4	Neutral board 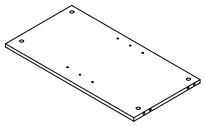	1
5	Left shelf 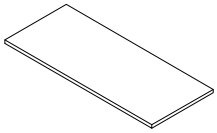	1

Item no.	Reference Image	Qty
6	Right shelf 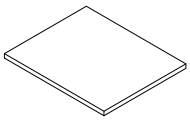	1
7	Back Panels 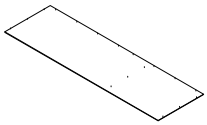	2
8	Left cabinet door 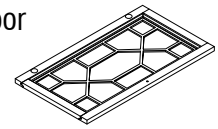	1
9	Right cabinet door 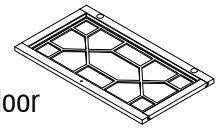	2
10	Leg 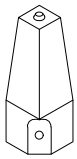	4

Hardware List

Item no.	Reference Image	Qty
A	M6*36	12+1
B	Ø15*9	12+1
C	Ø8*30	12+1
D	5/16"*45	4
	Ø8*14	4
	Ø8	4
E	5	1
F	M3*16 Umbrella head screw	34+3

Item no.	Reference Image	Qty
G	Anti toppling assembly	2
H	Ø6*10	8
I	52*13*8	2
J	M3*16 Flat head screw	40+4
K	Ø25	6
L	167*23*8 30*26*9	3
	M4*28	3
M		1

ASSEMBLY INSTRUCTIONS

CAM BOLT INSTALLATION AS BELOW

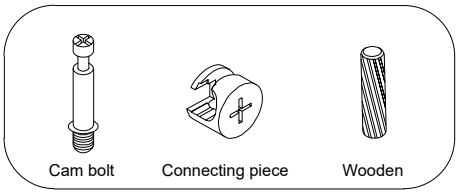

Screw the Cam bolt(5) fully into the wood board.

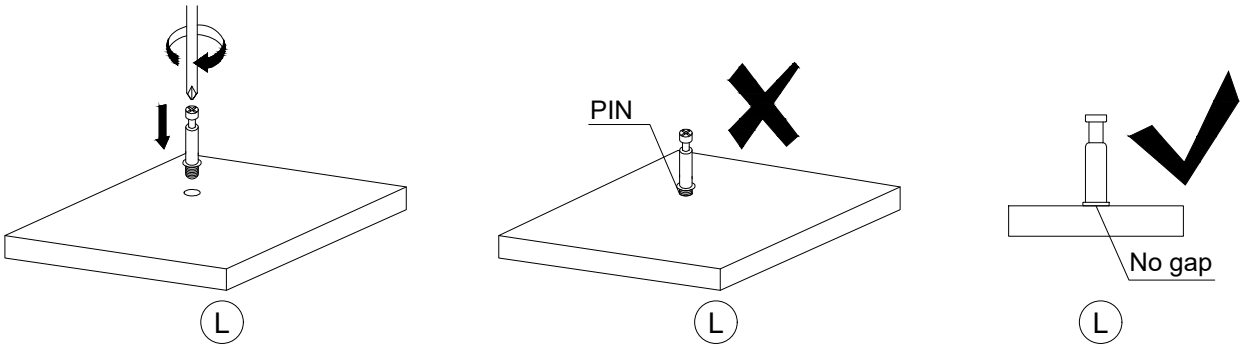

Insert camlock to the cam-bolt head.Then tightening camlock.

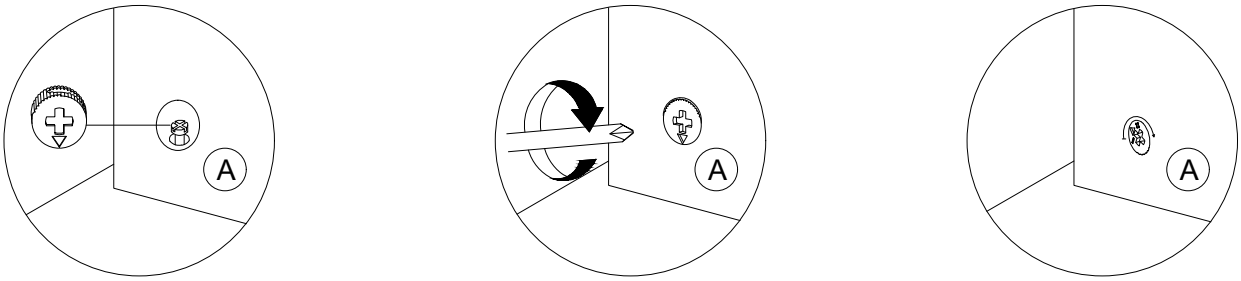

Insert wooden dowel into part A/B/C/D

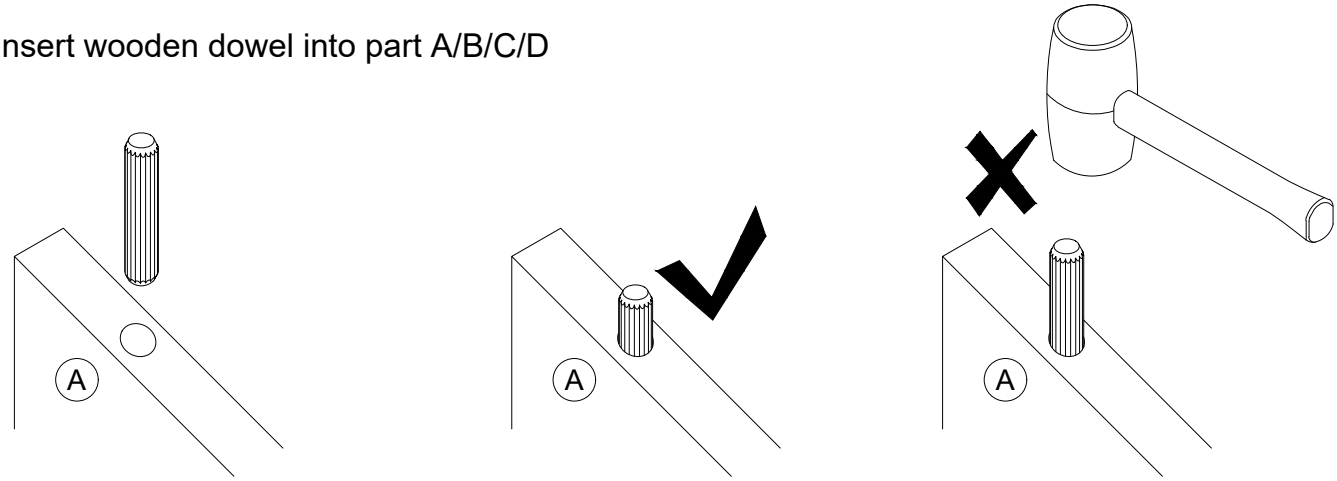

ASSEMBLY INSTRUCTIONS

1

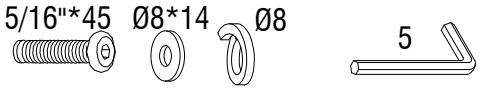

D 4pcs E 1pc

Install the Legs (10) on the bottom frame (2).

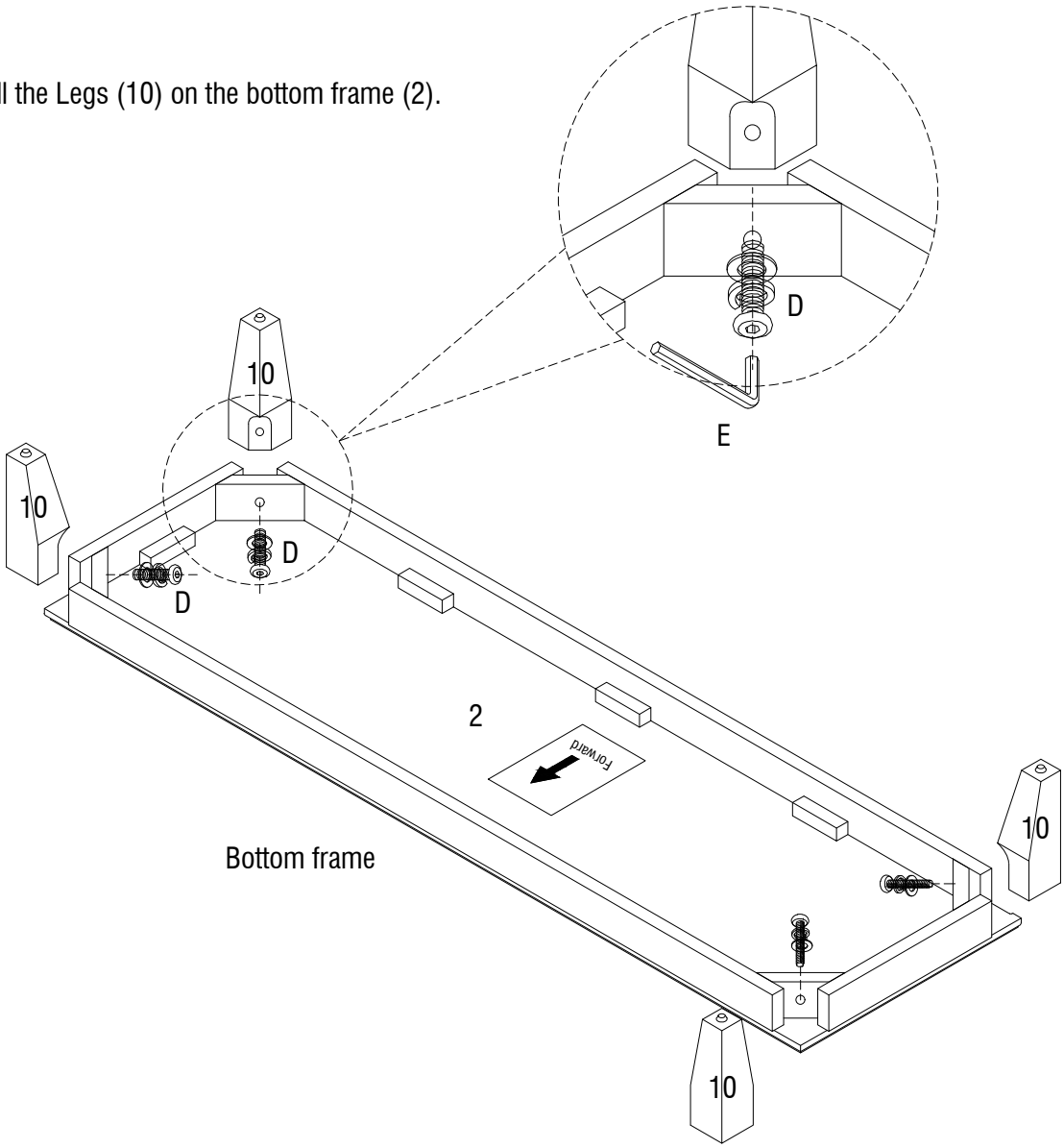

Bottom frame

ASSEMBLY INSTRUCTIONS

2

M6*36

A 6pcs

M 1pc

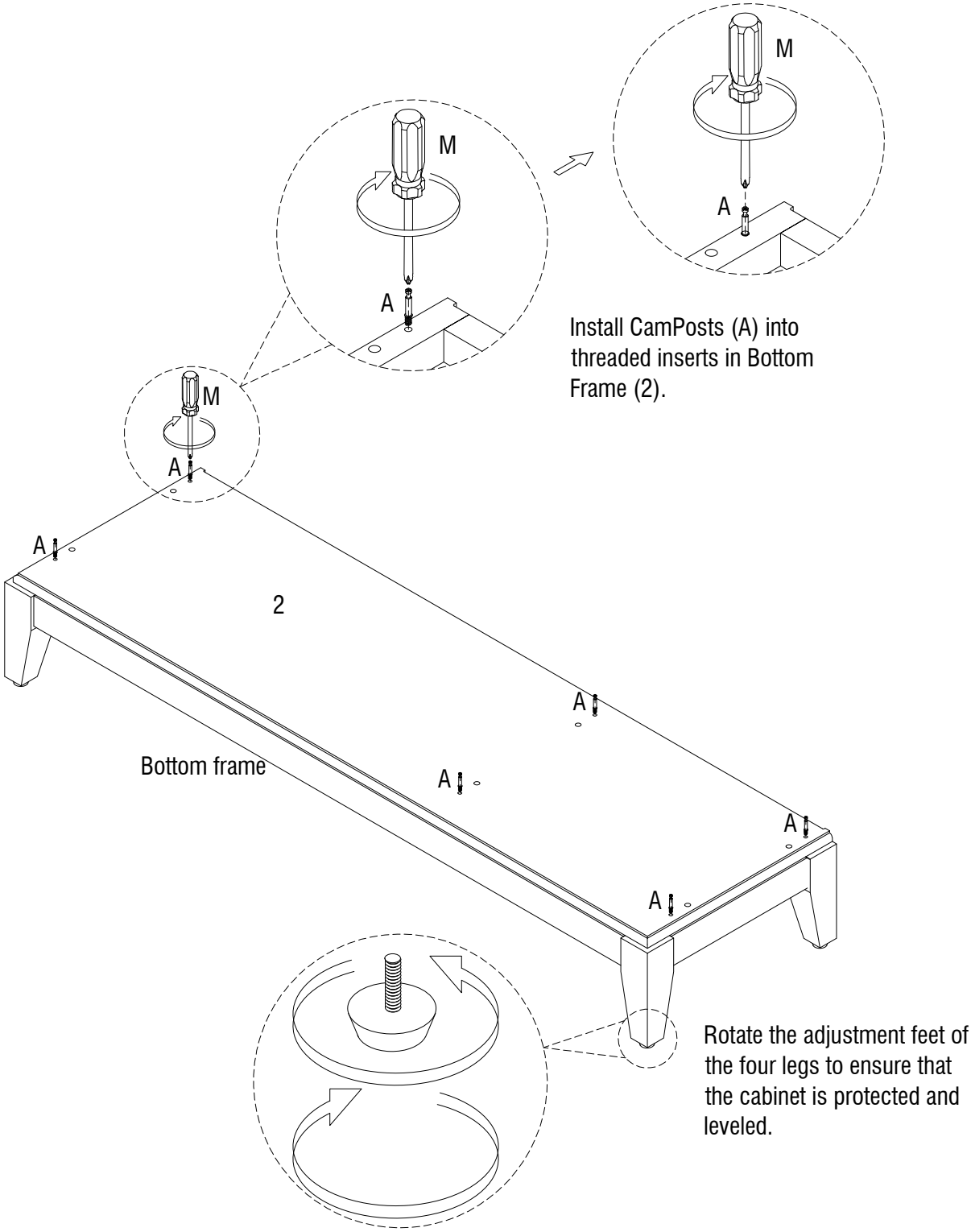

Install CamPosts (A) into threaded inserts in Bottom Frame (2).

Rotate the adjustment feet of the four legs to ensure that the cabinet is protected and leveled.

ASSEMBLY INSTRUCTIONS

3

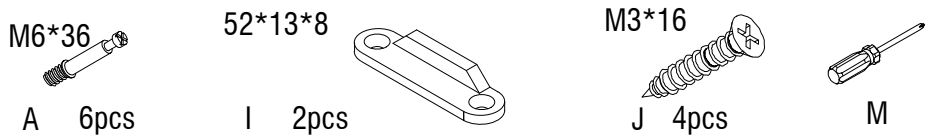

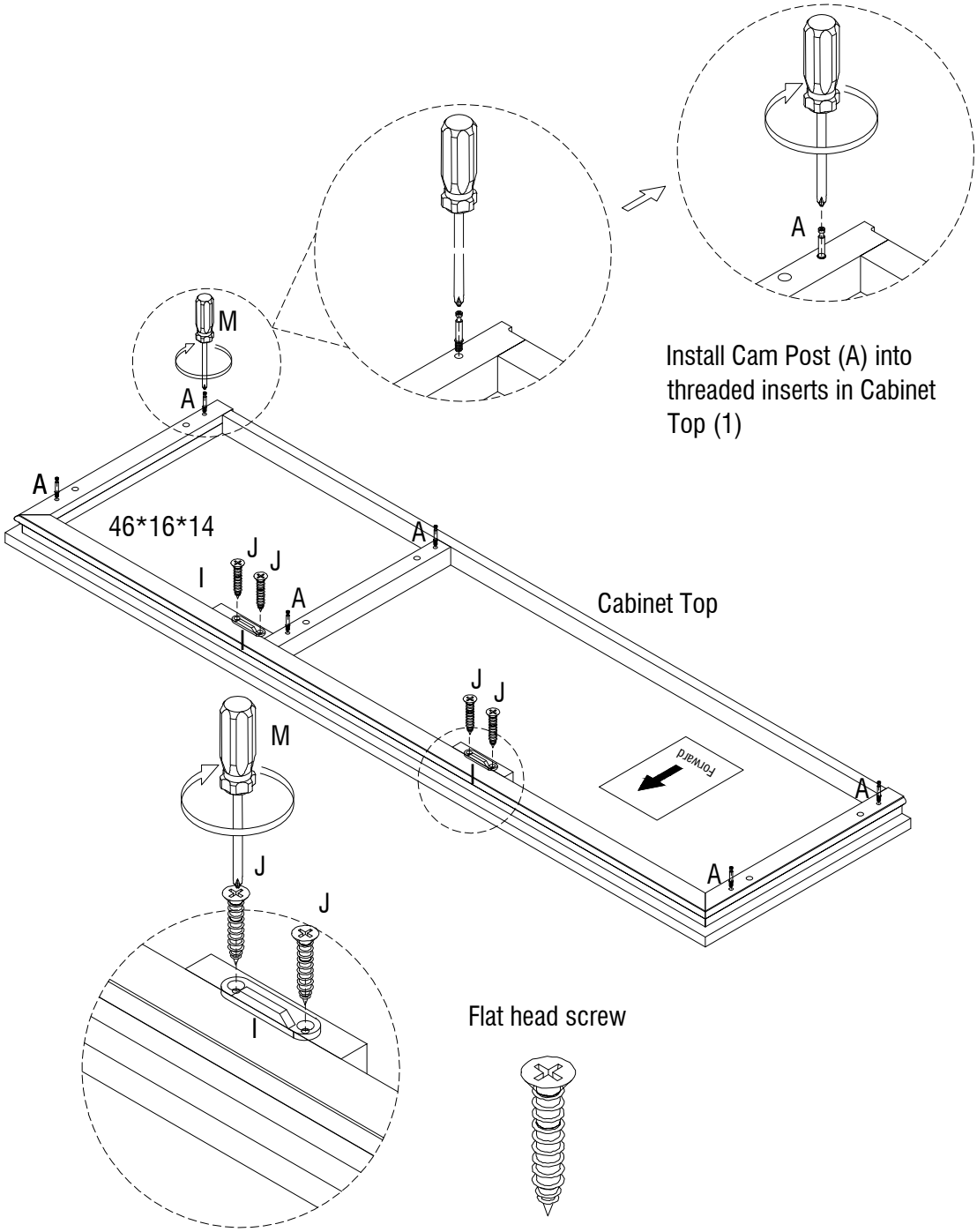

Install Cam Post (A) into threaded inserts in Cabinet Top (1)

Attach Door Stop (I) to Cabinet Top (1) using Screw (J).

ASSEMBLY INSTRUCTIONS

4

Ø8*30

C 12pcs

Insert Wood Dowels (C) into Side Panel (3)
and Neutral Board (4).

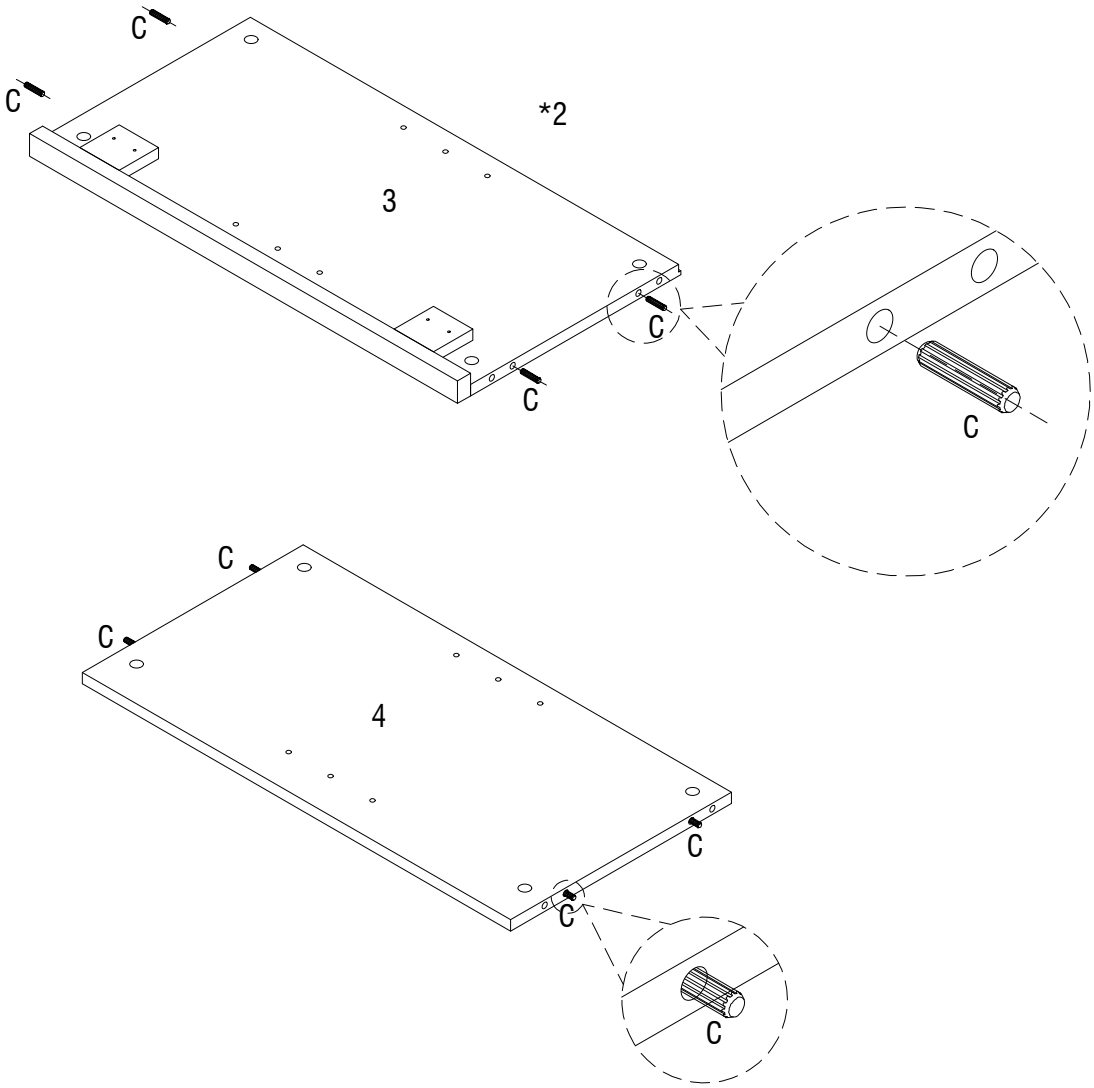

ASSEMBLY INSTRUCTIONS

5

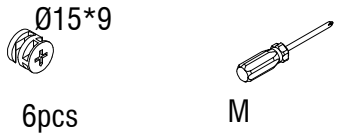

Attach Left and Right Side Panels (3),Neutral board (4) to Bottom Frame (2) by turning Cams Fastener(B).

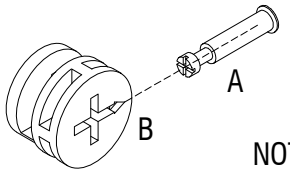

NOTE: The arrow on the face of the Cam (B) should point towards the Cam Post (A) for proper alignment.

Please ensure maintain consistent front-to-back alignment between Side Panels and Bottom Frame in this step.

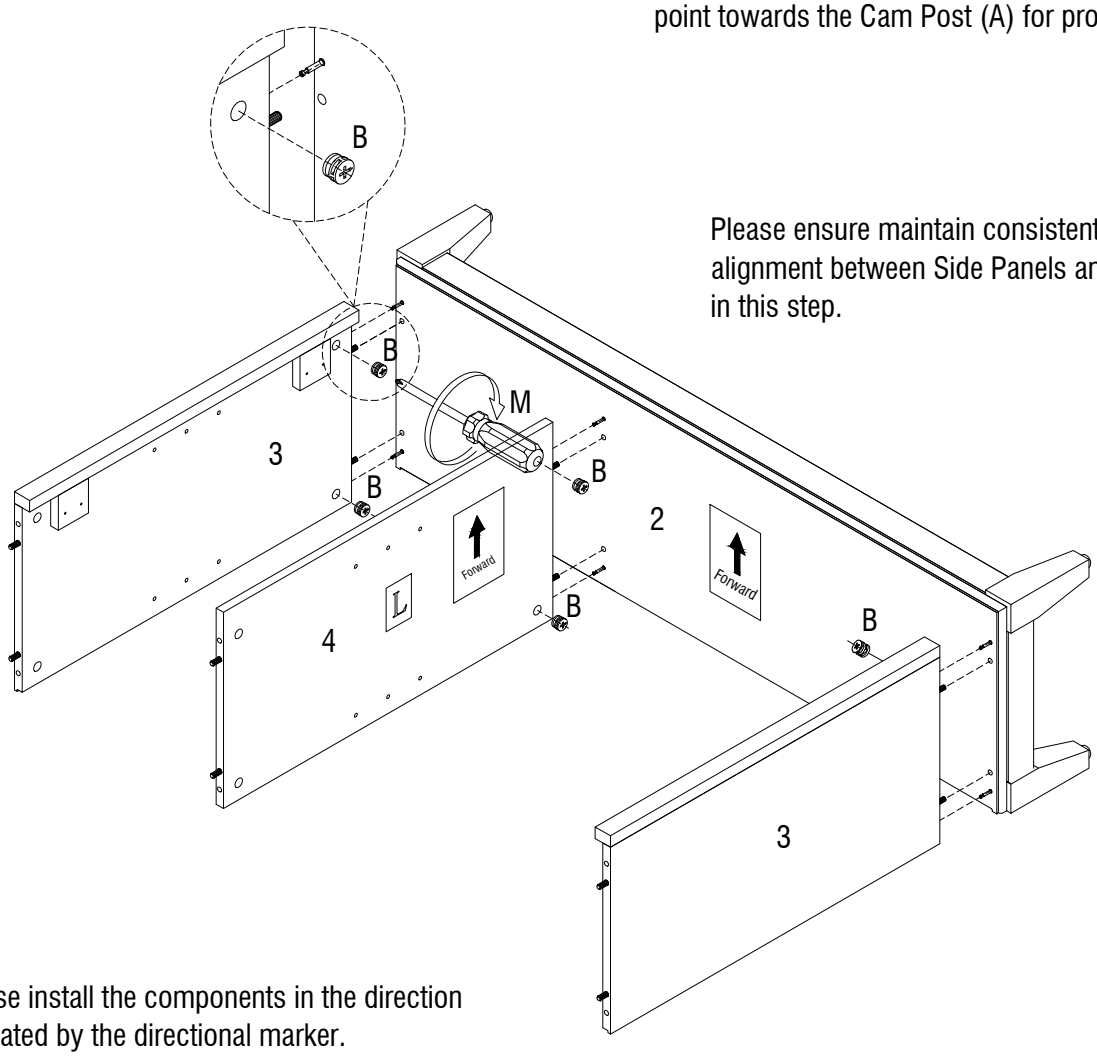

Please install the components in the direction indicated by the directional marker.

ASSEMBLY INSTRUCTIONS

6

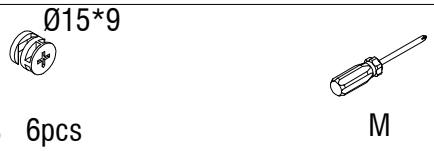

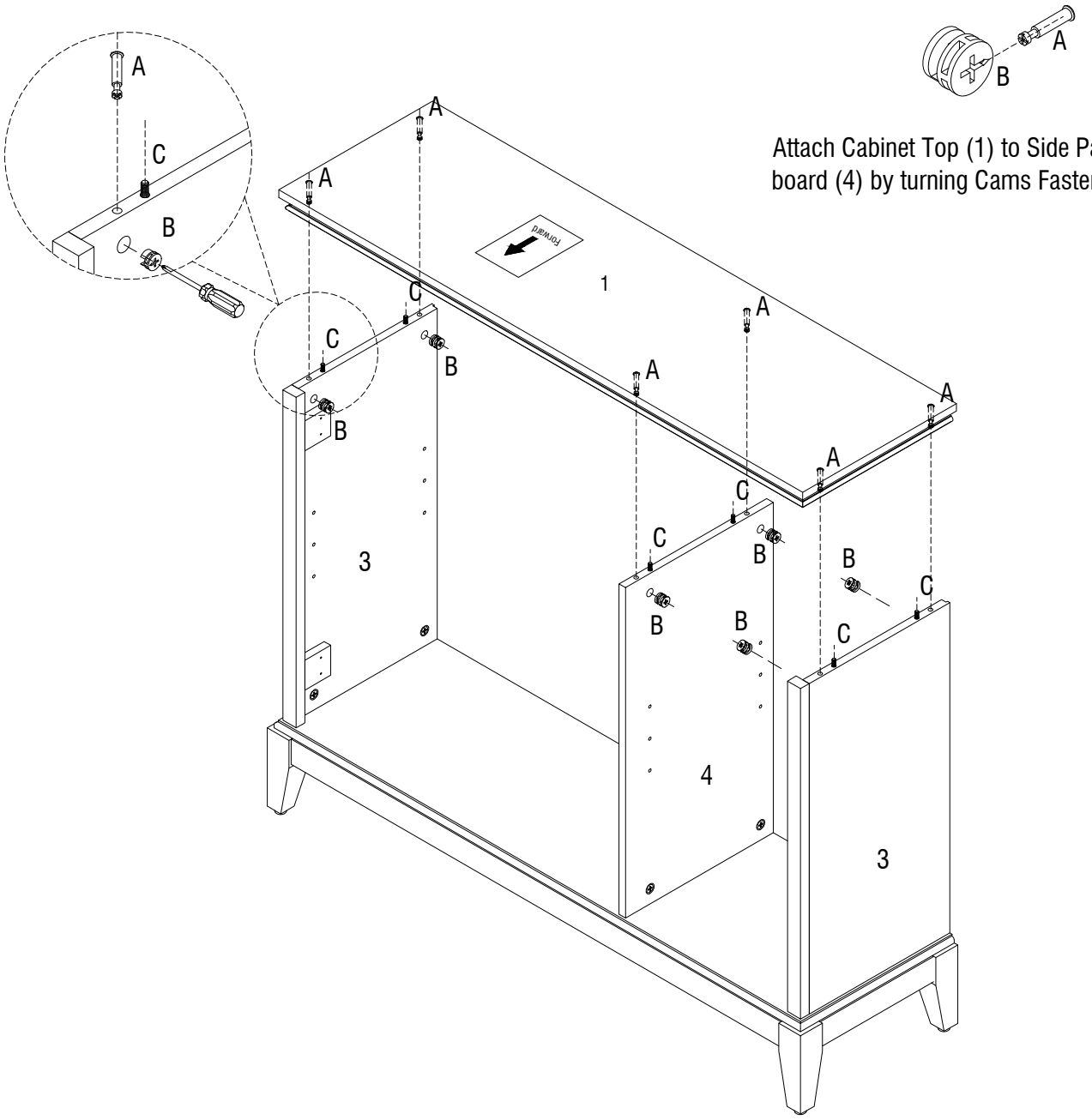

Attach Cabinet Top (1) to Side Panels(3) ,Neutral board (4) by turning Cams Fastener(B).

ASSEMBLY INSTRUCTIONS

7

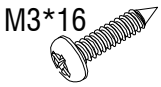

F 34pcs

G 2pcs

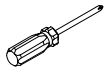

M

Install the Back Panels (7) using Screw (F).

Install the Anti Toppling Device (G) on the Back Panels (7)

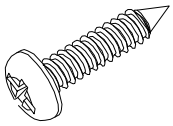

F

Umbrella head screw

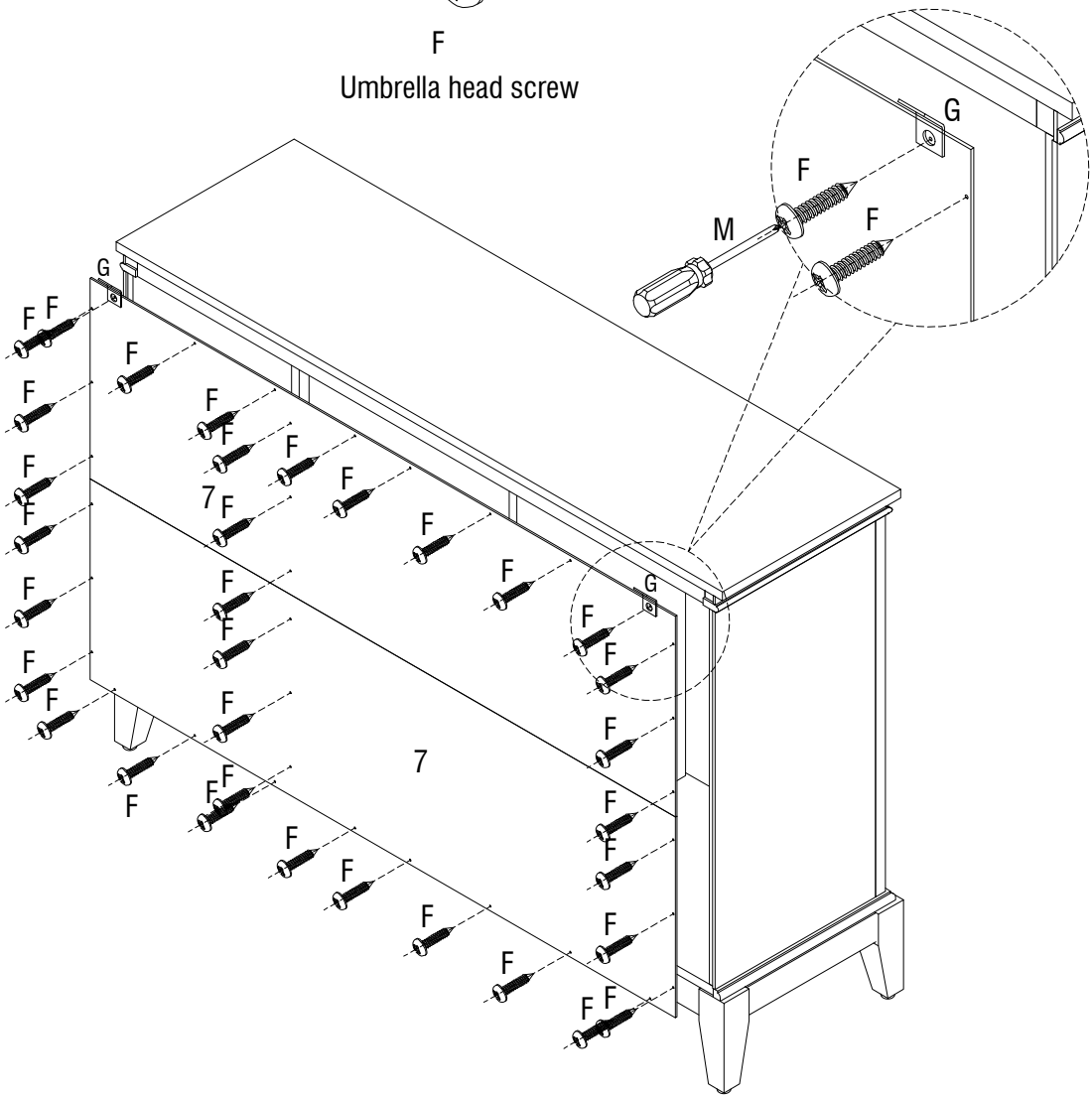

ASSEMBLY INSTRUCTIONS

8

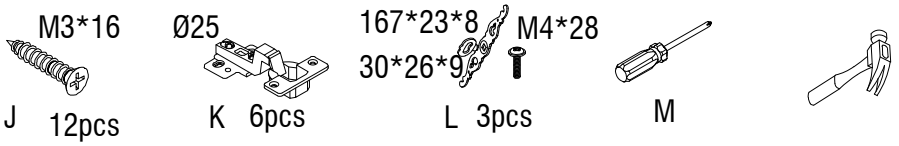

Insert Screw (J) through Hinge (K) into the door guide hole.Partially tighten screws (do not fully tighten yet).

Notice:
Ensure the door panel is fully loosened before standing it upright, which allows fine-tuning the door position in the next step.

Flat head screw

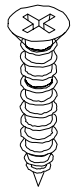

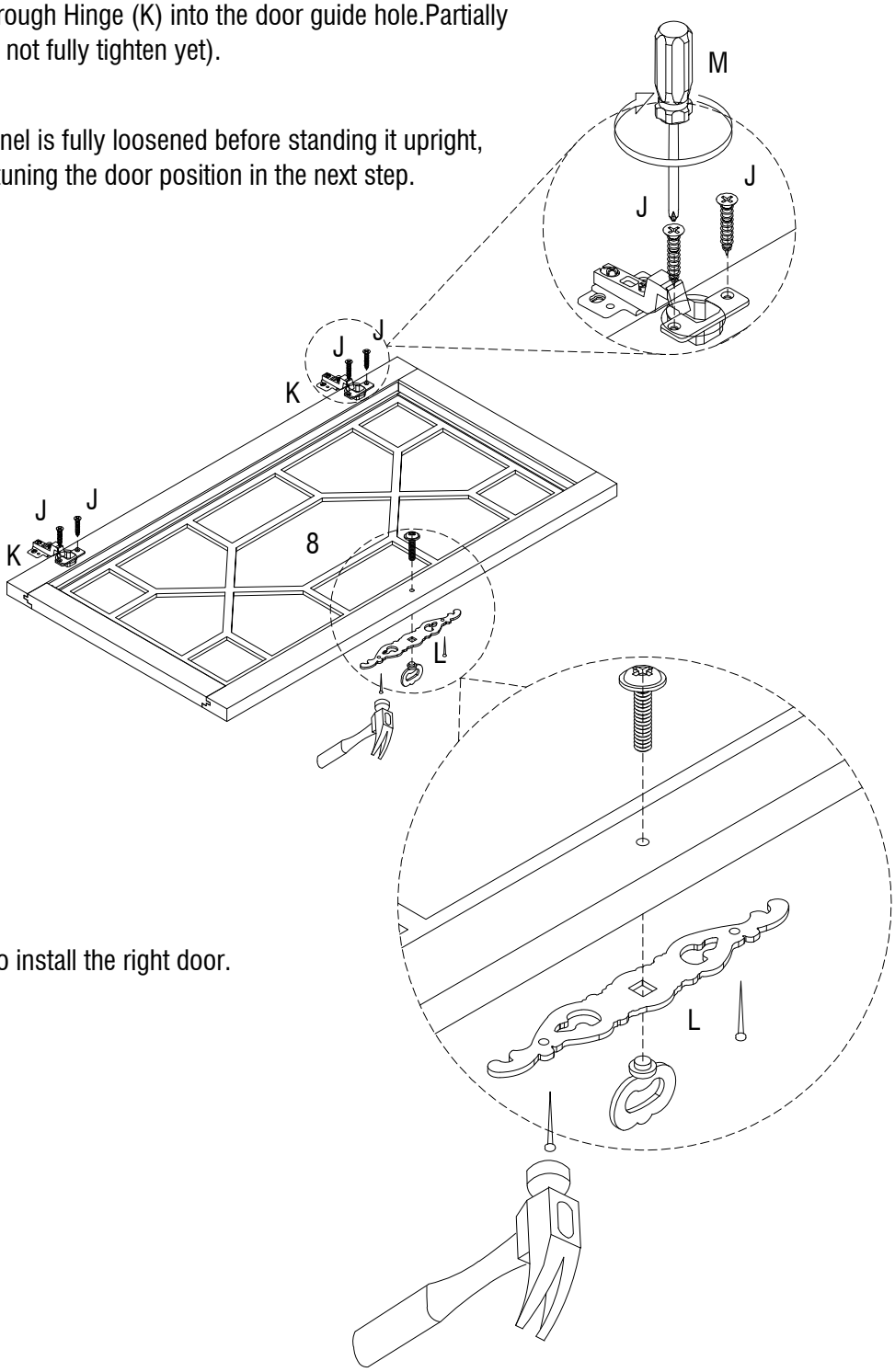

Repeat the above steps to install the right door.

ASSEMBLY INSTRUCTIONS

9

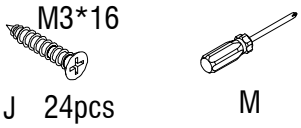

Pass Screw (J) through the hole in Hinge (K). Align with the lead hole on the Side Panel. Partially tighten screws until they are 50-70% engaged (do not fully tighten).

Close the door and adjust seam gaps around all edges. After debugging, tighten each screw.

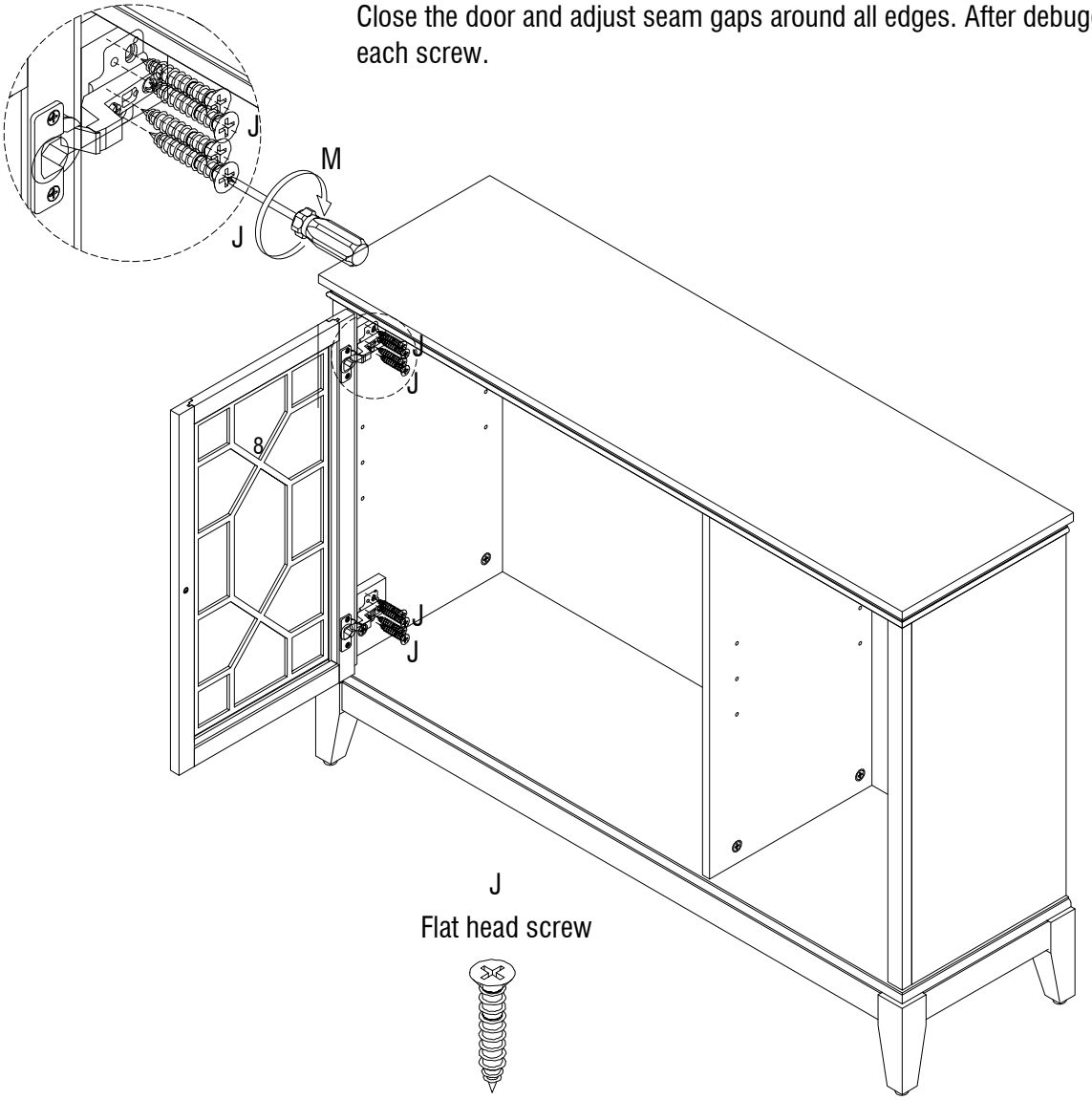

Repeat the above steps to install the right door.

Cabinet Door Adjustment Instructions

Height adjustment:

a) Locate the height adjustment screws on the hinge.

b) Use the Phillips screwdriver to either tighten or loosen the screws to raise or lower the cabinet door as desired.

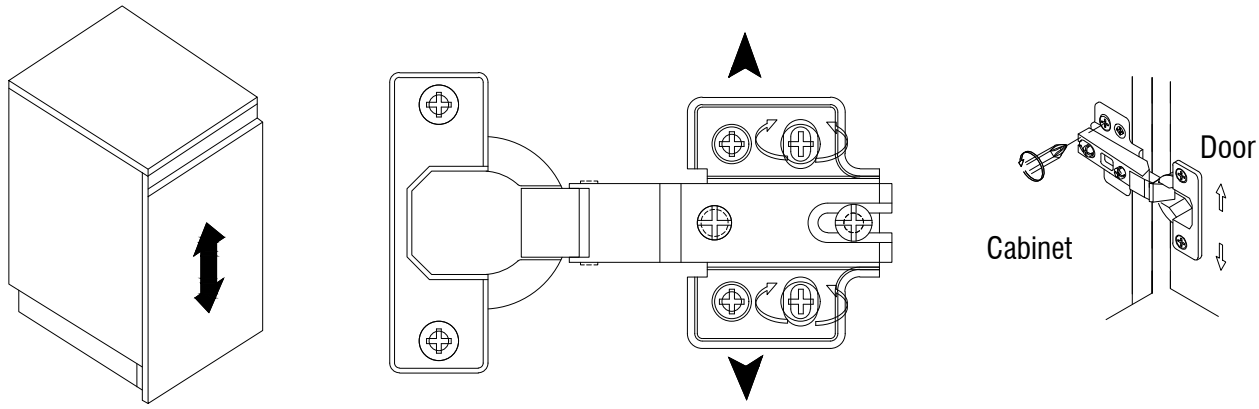

Side-to-side adjustment:

a) If the cabinet door needs to be movded closer to or away from the cabinet frame,locate the side--to-side adjustment screws on the hinge.

b) Use the Phillips screwdriver to adjust these screws and gradually move the door in the desired direction.

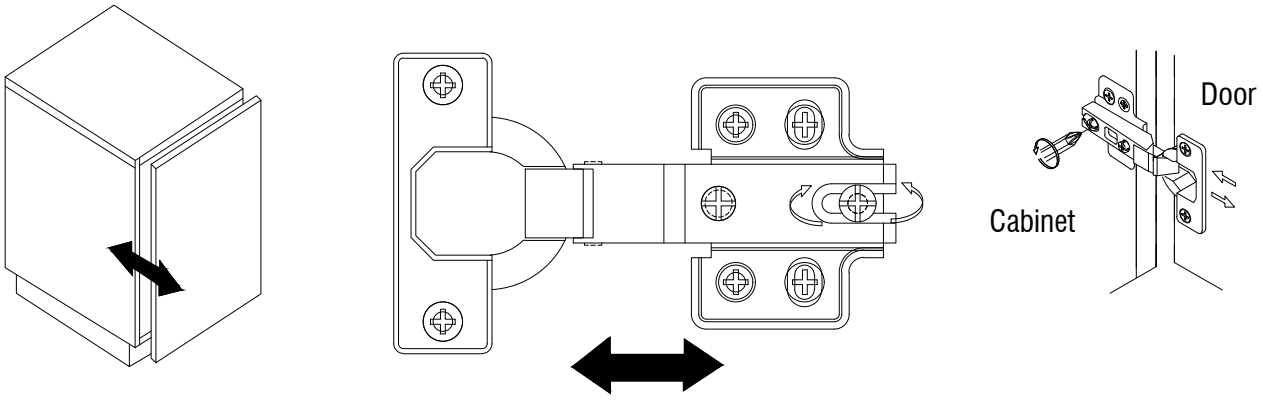

Depth adjustment (if applicable):

a) Check if the cabinet door needs to be brought closer to or further away from the cabinet frame.

b) For-depth adjustment,locate the depth adjustment screws on the hinge.

c) Use the Phillips screwdriver to turn these screws clockwise or counterclockwise accordingly.

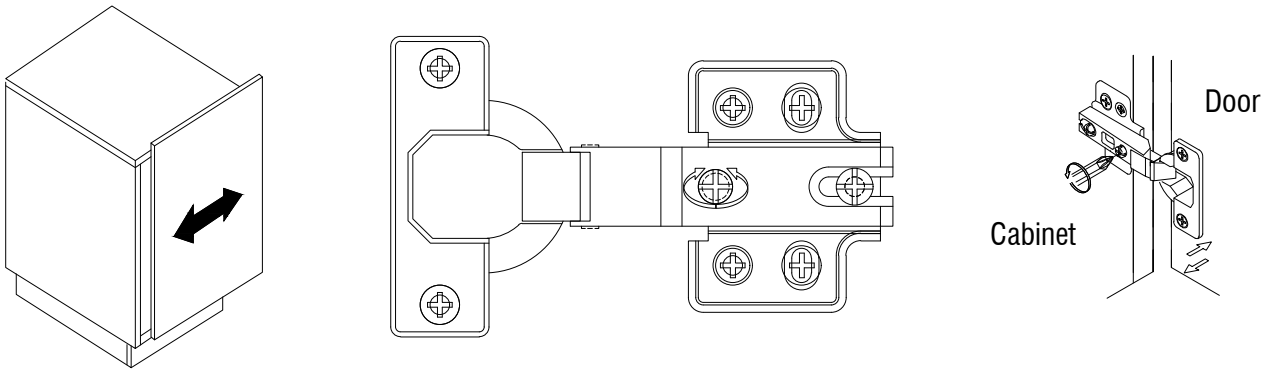

ASSEMBLY INSTRUCTIONS

10

Ø6*10

H 8pcs

Install Shelf Support Pins (H) into Left and Right Side Panel (3),Neutral Board (4).
Install Moveable Shelves (5,6).

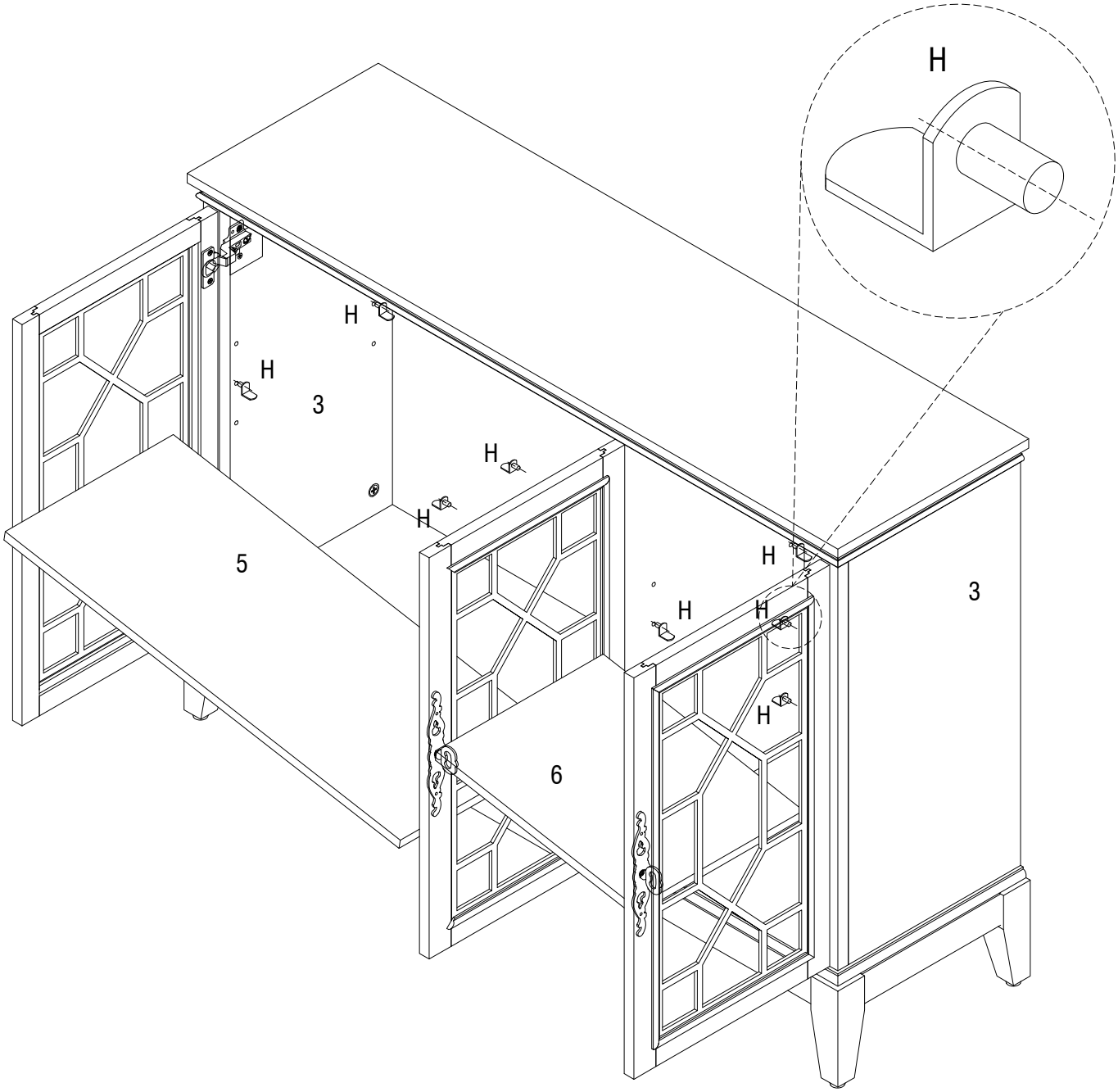

11

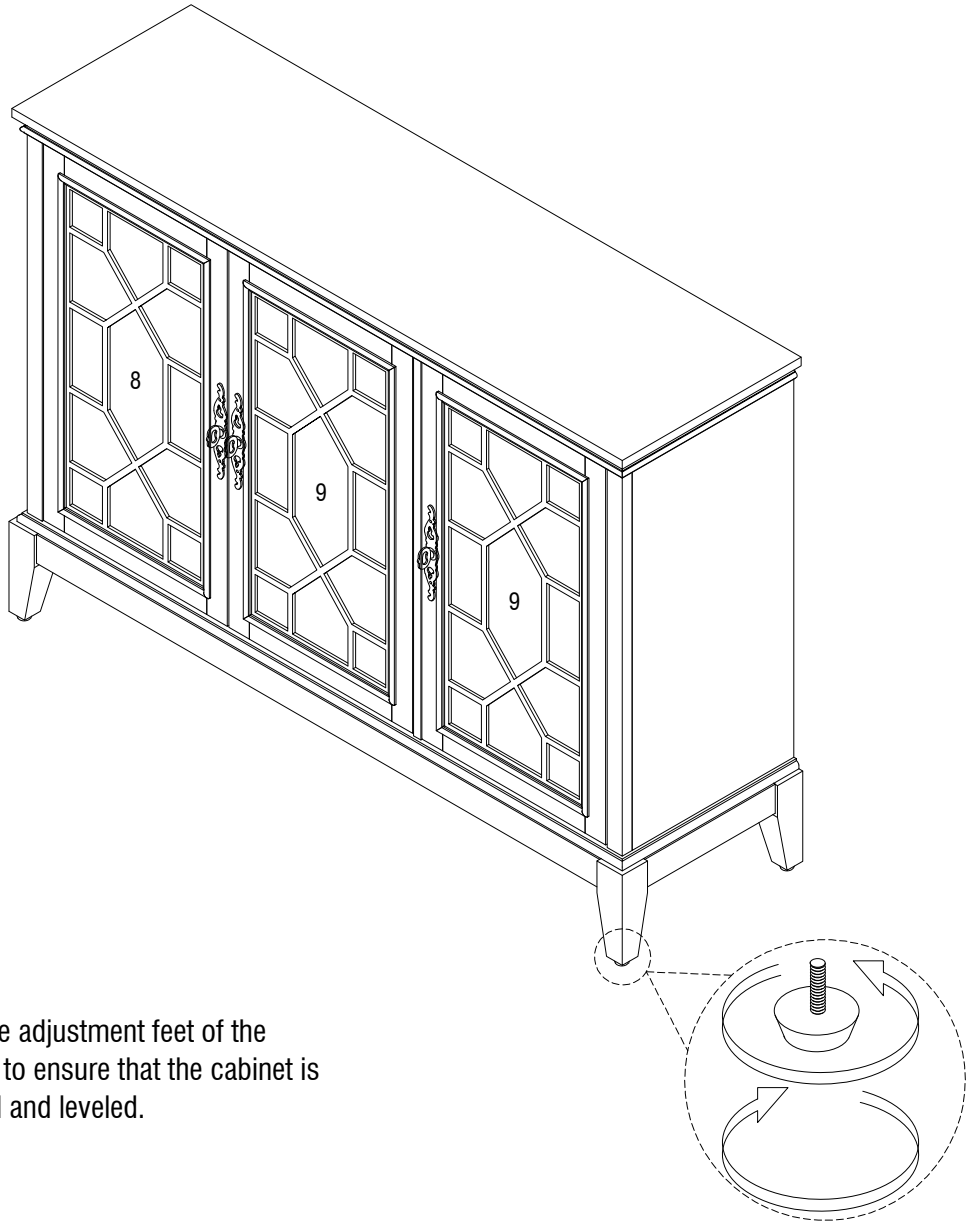

Rotate the adjustment feet of the four legs to ensure that the cabinet is protected and leveled.

ASSEMBLY INSTRUCTIONS

12

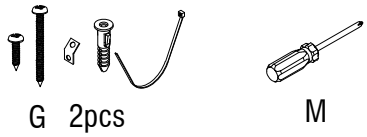

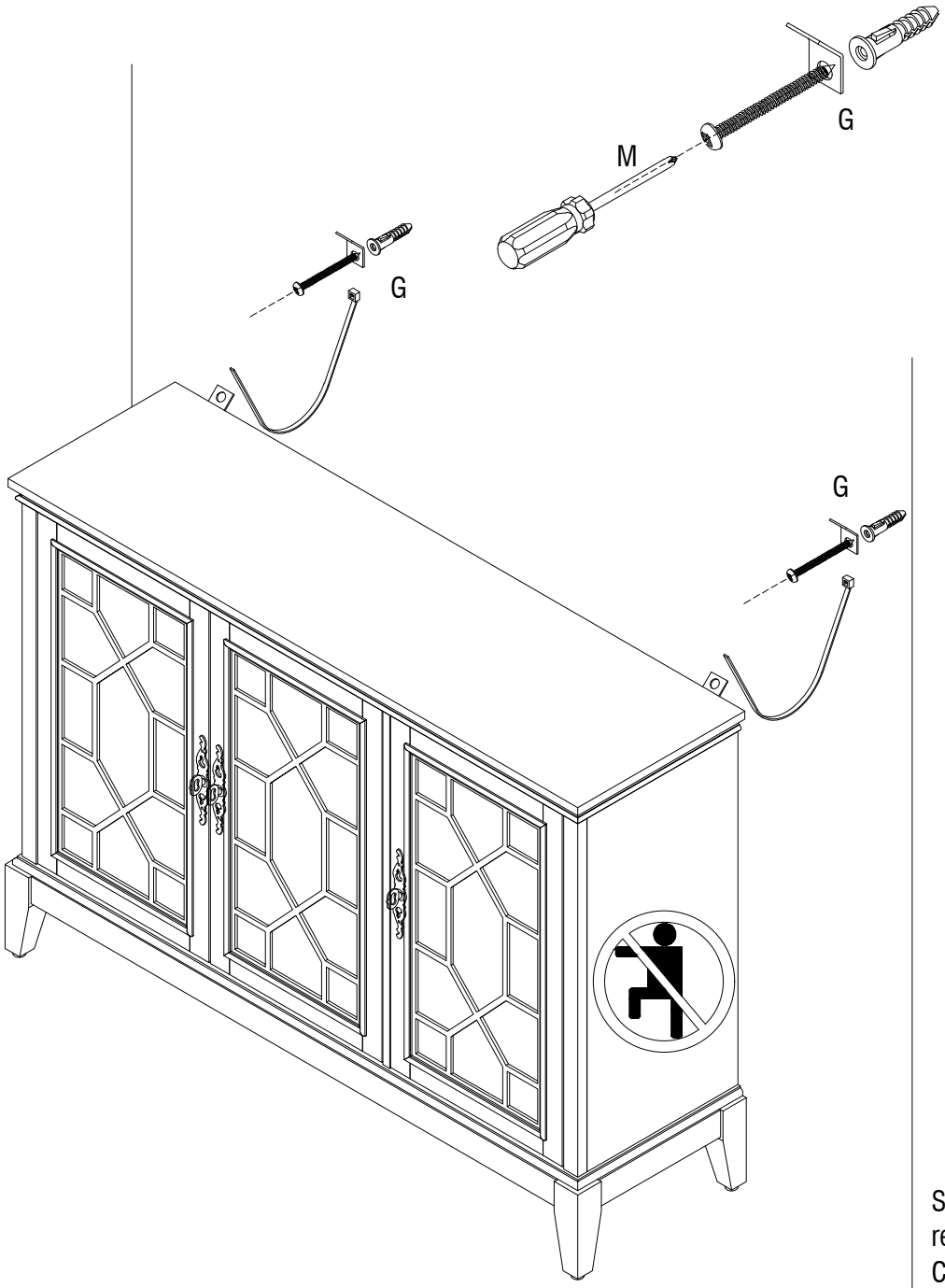

Warning: No Climbing

Safety Notice: Always install tipover restraint provided.
Climbing on furniture may result in serious injury. Keep children away from shelves, cabinets and furniture.

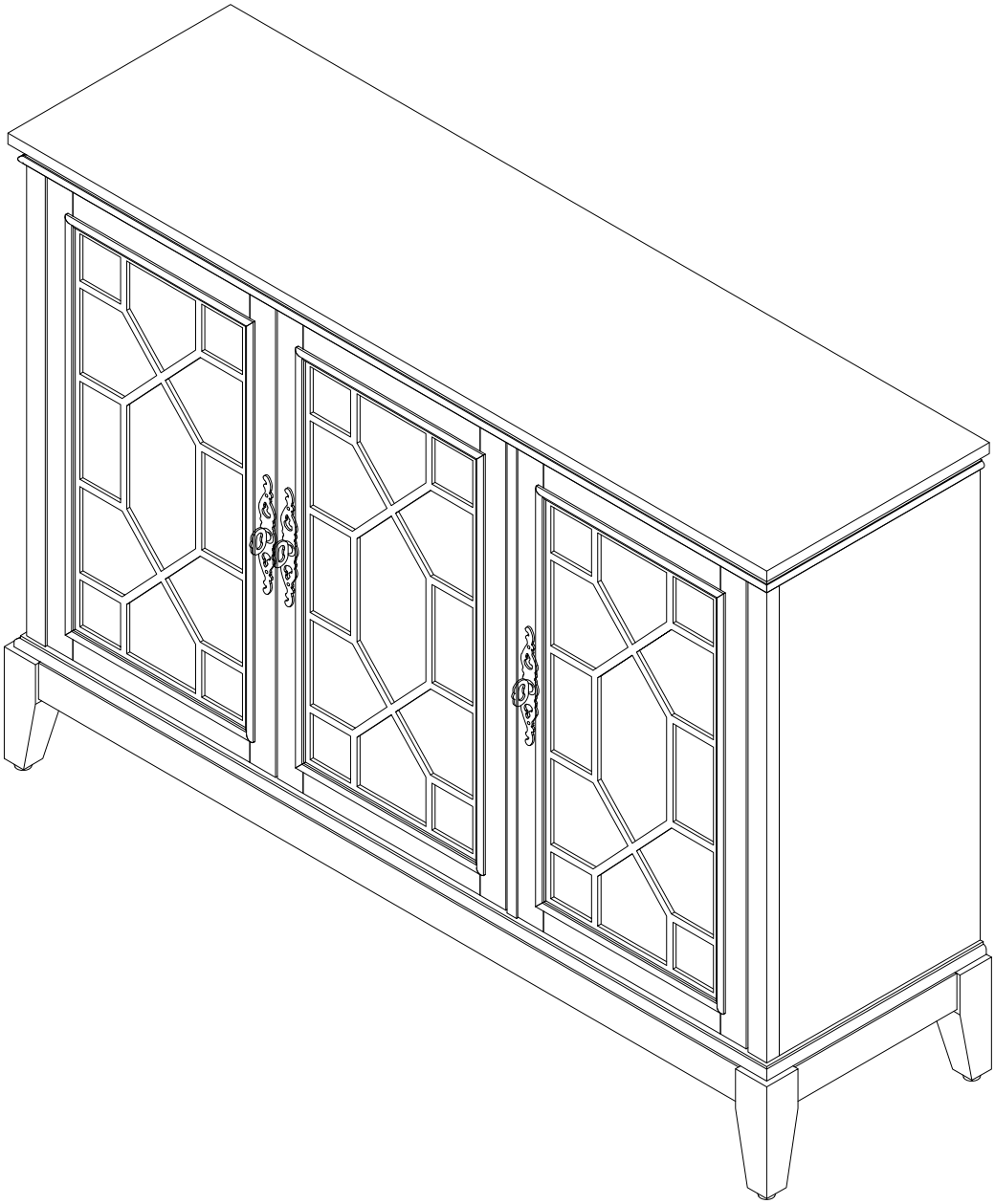

Completed