2 Person Porch Swing
Assembly Instructions

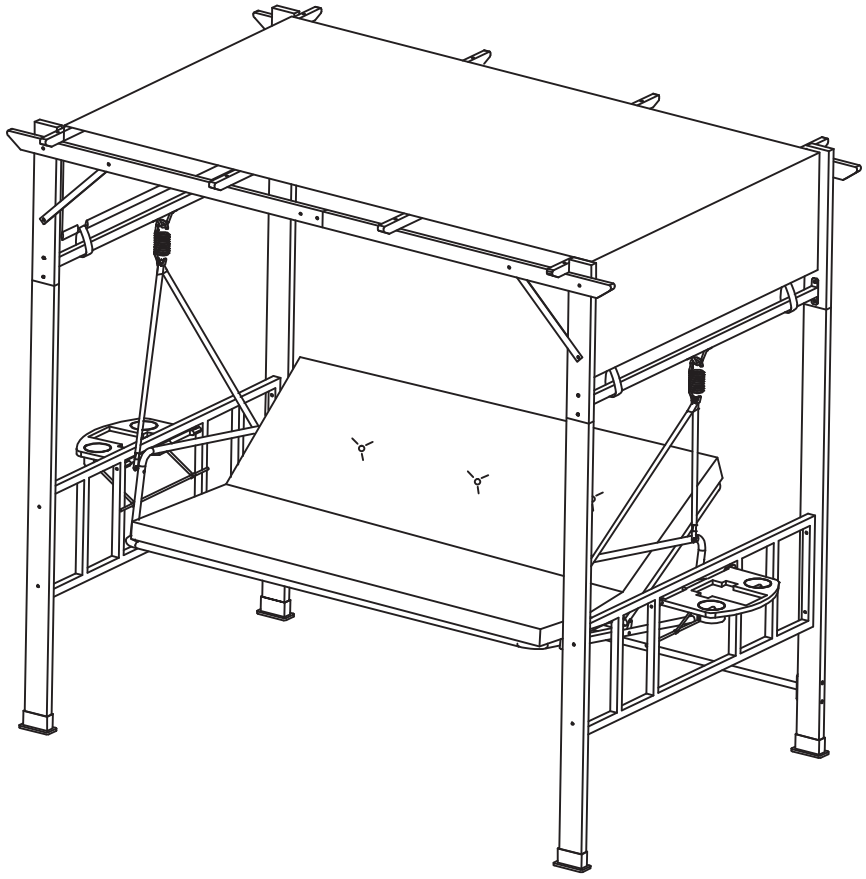

Before You Start

- ◎ Please read all instructions carefully.
- ◎ Retain instructions for future reference.
- ◎ Separate and count all parts and hardware.
- ◎ Read through each step carefully and follow the proper order.
- ◎ We recommend that, where possible, all items are assembled near to the area in which they will be placed in use, to avoid moving the product unnecessarily once assembled.
- ◎ Always place the product on a flat, steady and stable surface.
- ◎ Keep all small parts and packaging materials for this product away from babies and children as they potentially pose a serious choking hazard.

Parts List

A 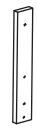 4PCS	B  2PCS	C  2PCS	D  2PCS	E  2PC
F 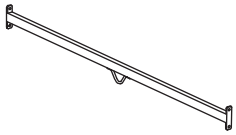 2PC	G 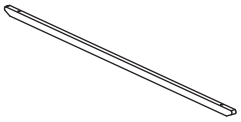 4PCS	H  1PC	J  1PC	K 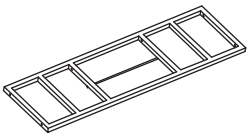 2PCS
L 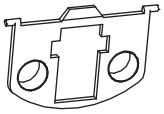 2PCS	M 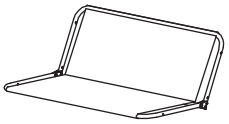 1PC	N 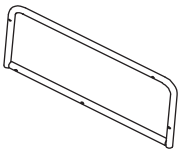 2PCS	P 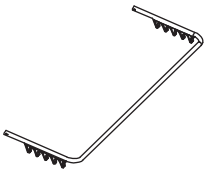 1PC	Q  1PC
R 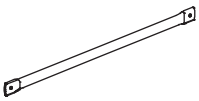 4PCS	S  4PCS	T  2PCS	U  2PCS	V  1PC
W 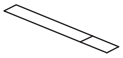 4PCS	X  1PC			

Screw Package List			
a 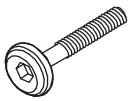 M6*30 1PC	b 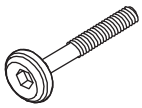 M6*35 20+2PCS	c 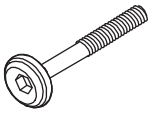 M6*50 8PCS	d 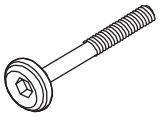 M6*55 2PCS
e 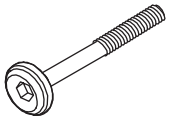 M6*60 8PCS	f 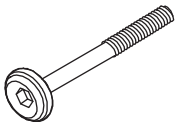 M6*65 4PCS	g 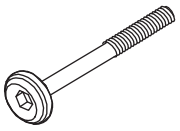 M6*88 8PCS	h 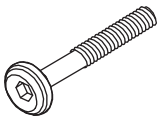 M8*40 6PCS
j 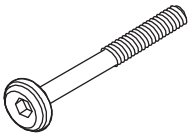 M8*70 4PCS	k  M6 51+2PCS	l  M6 104+2PCS	AA-M6  Allen key 1PC
m  M8 8PCS	n  M8 18PCS	AA-M8 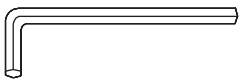 Allen key 1PC	p 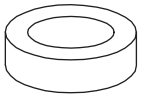 4PCS
BB 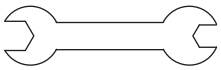 1PC	q  4PCS	r  M6 51+2PCS	s  M8 8PCS

Assembly Guide

STEP 1

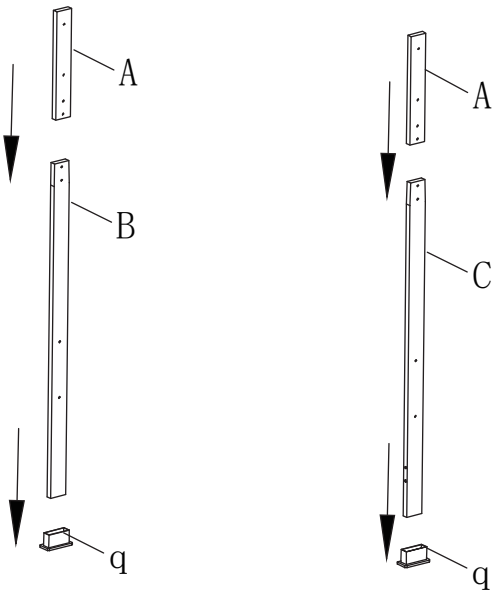

STEP 2

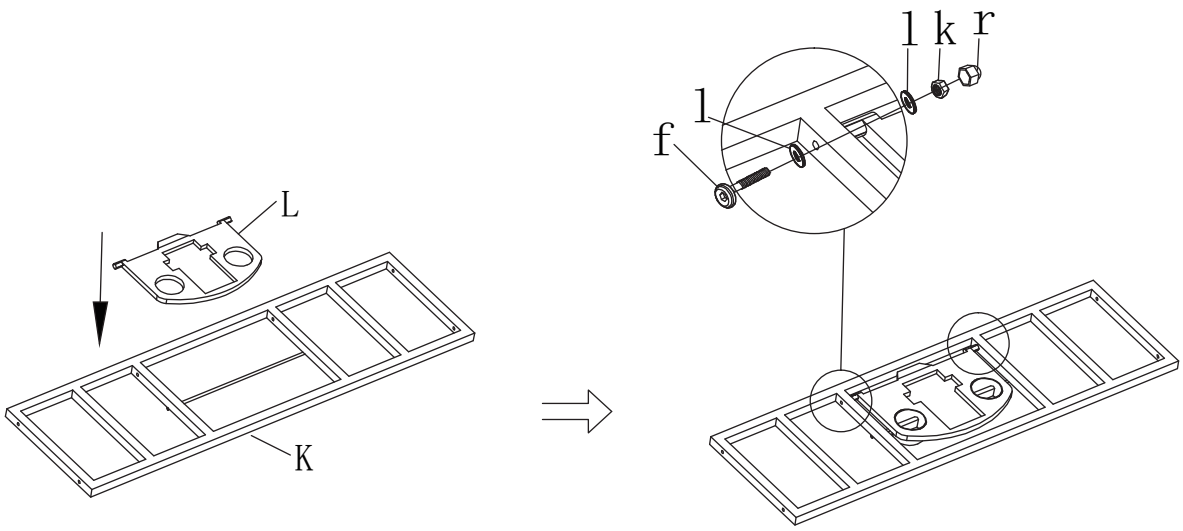

STEP 3

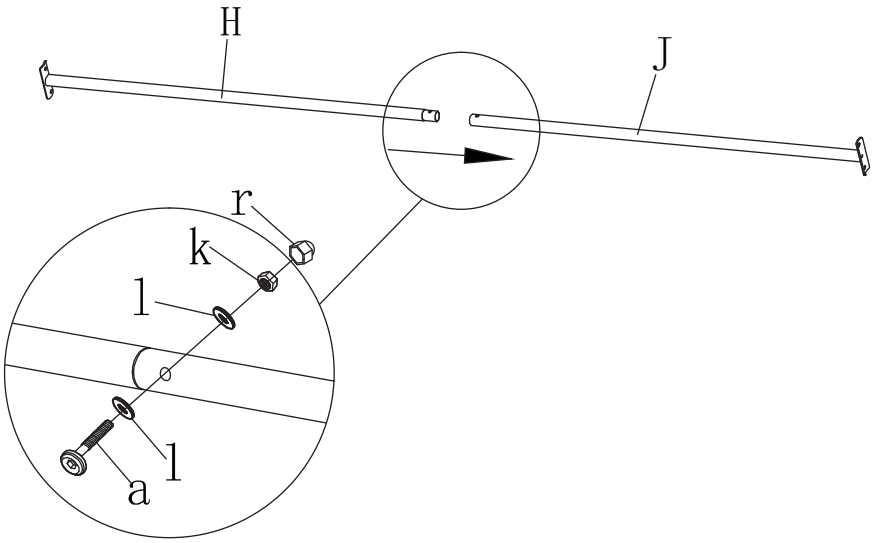

STEP 4

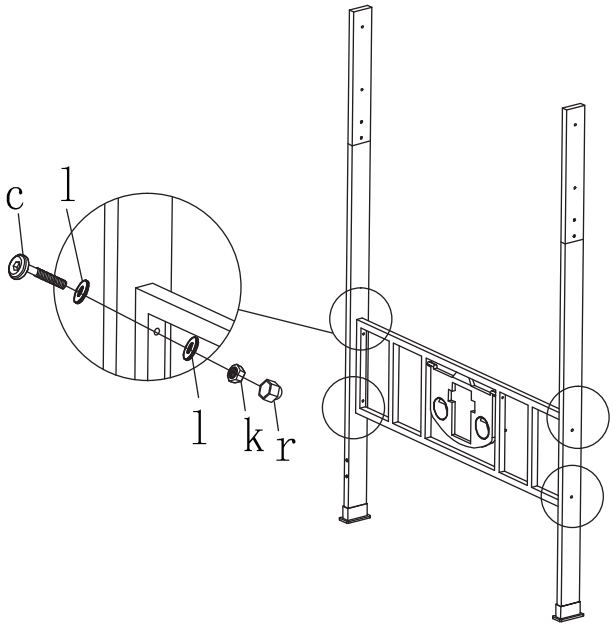

STEP 5

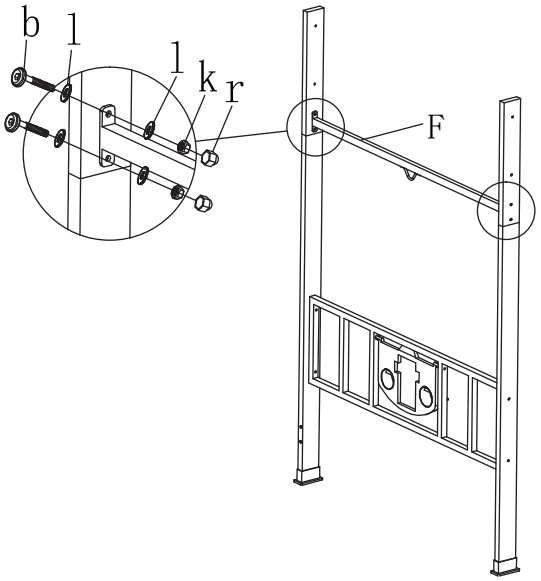

STEP 6

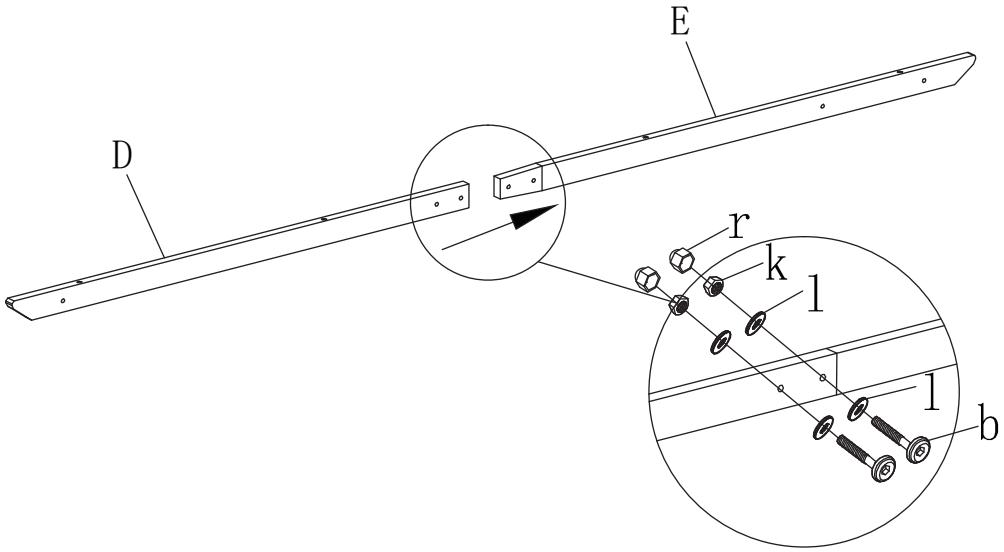

STEP 7

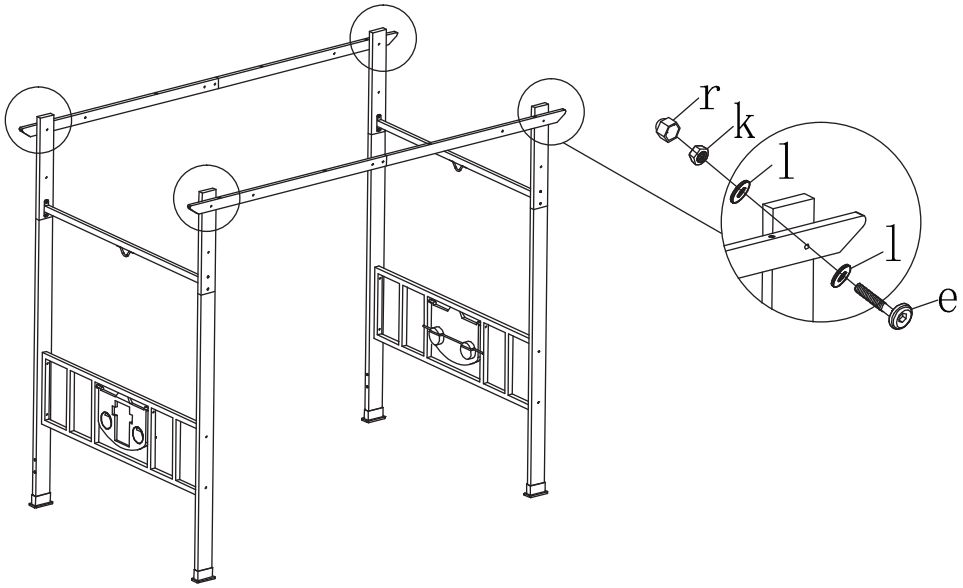

STEP 8

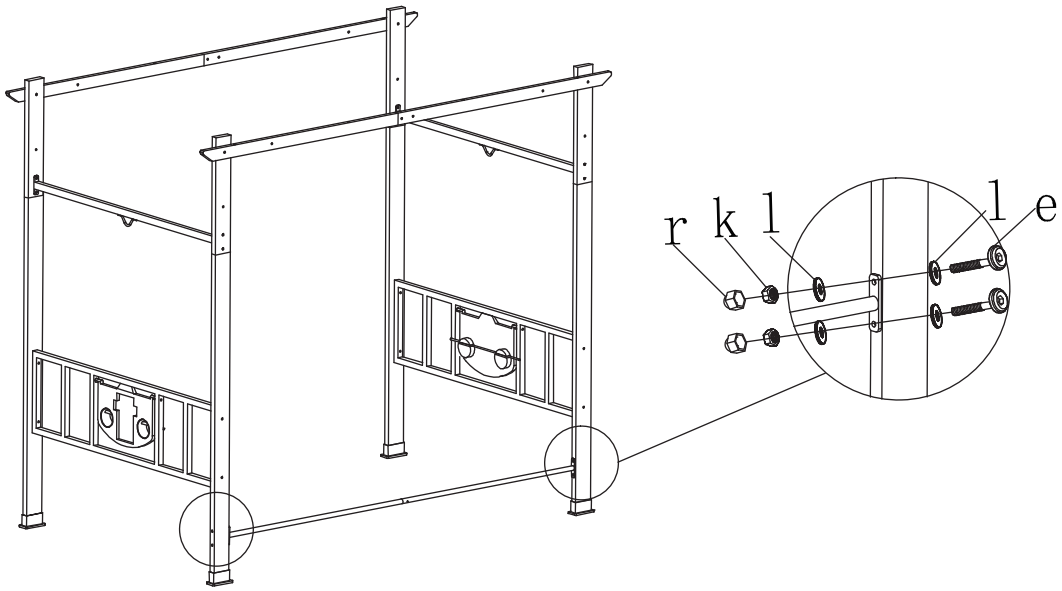

STEP 9

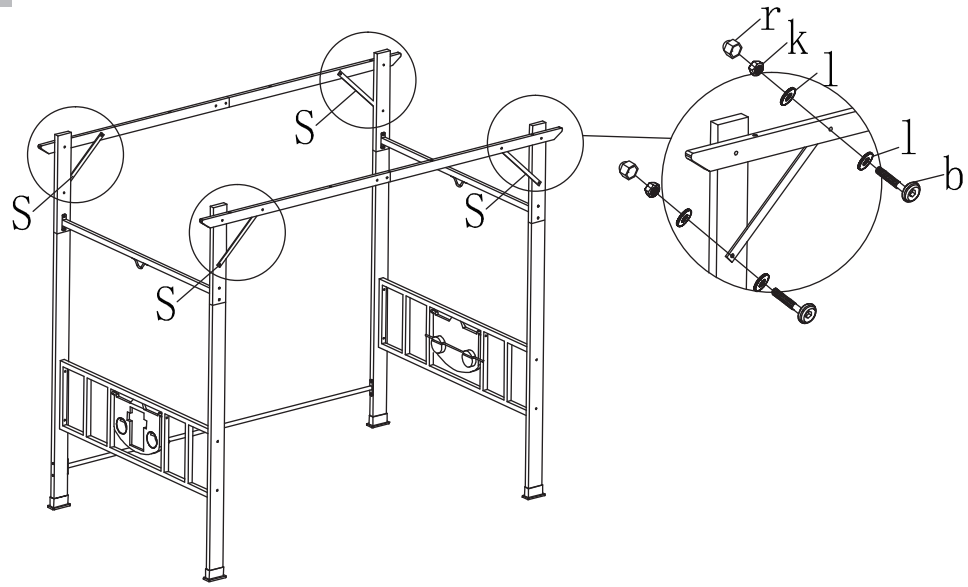

STEP 10

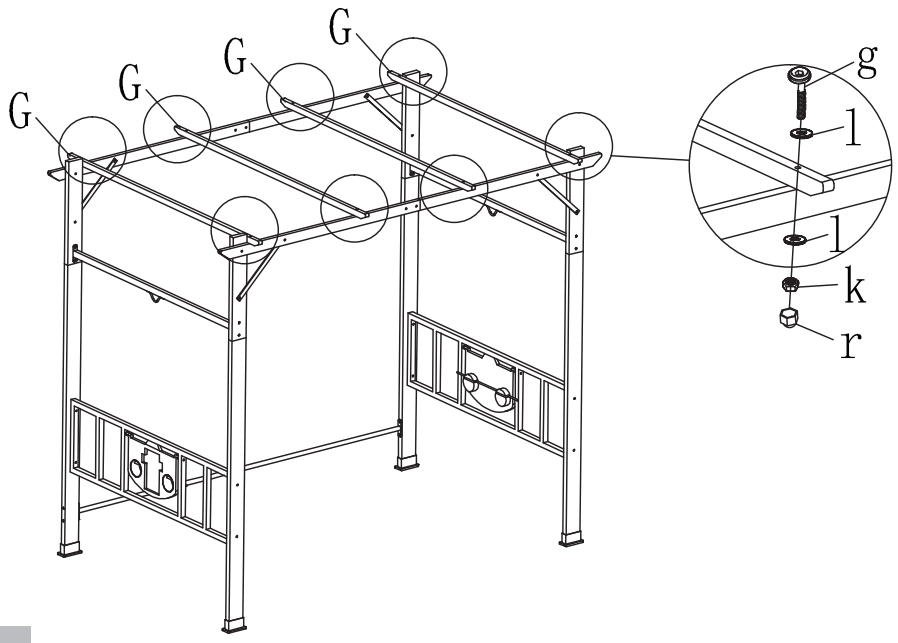

STEP 11

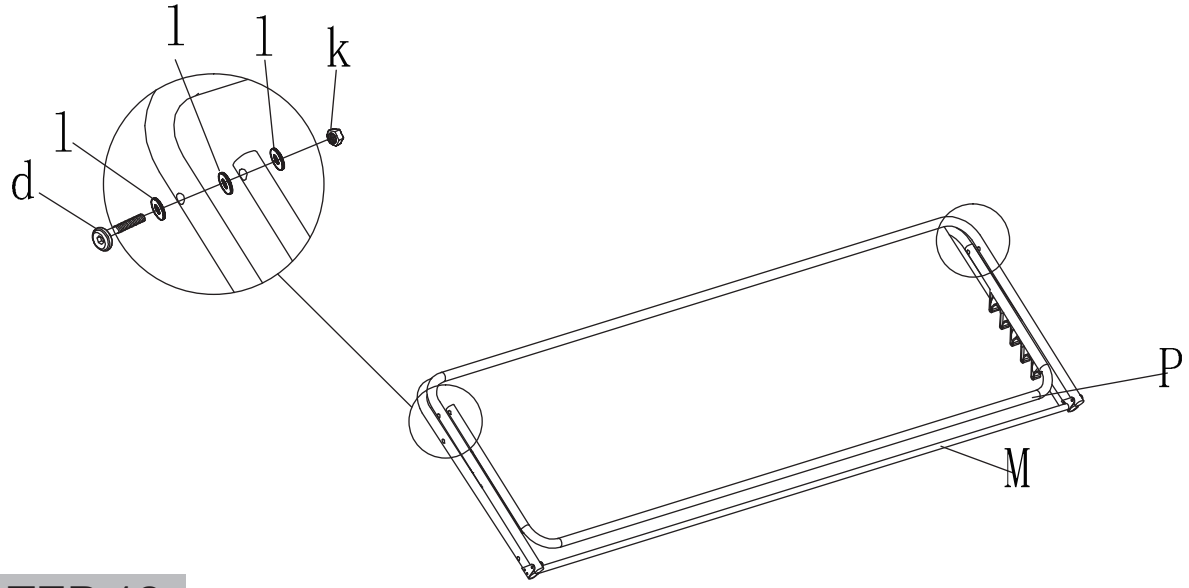

STEP 12

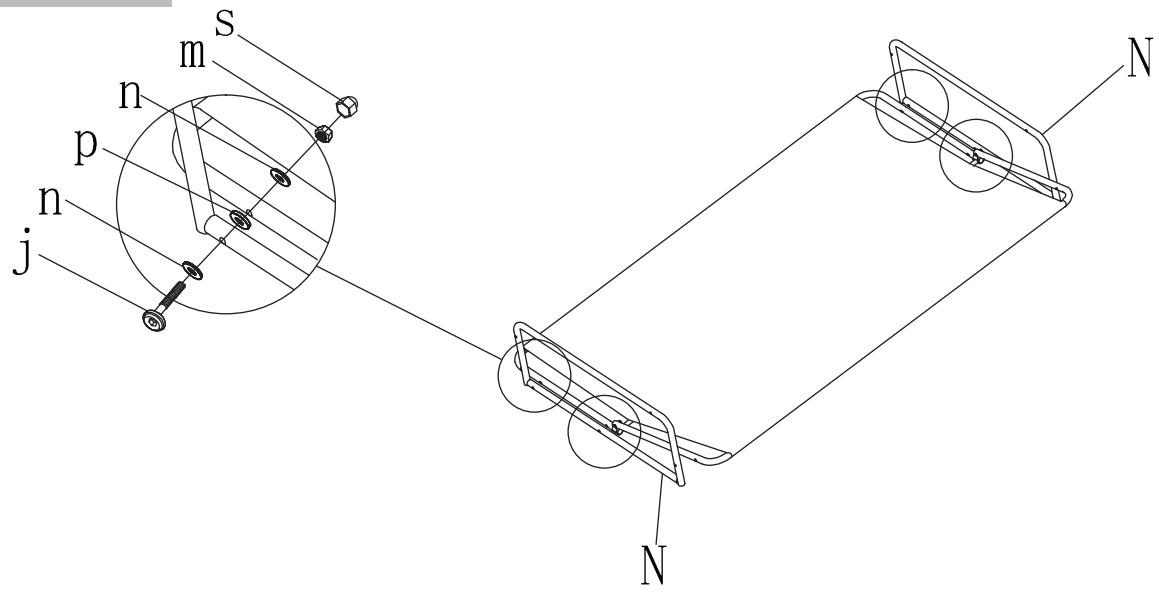

STEP 13

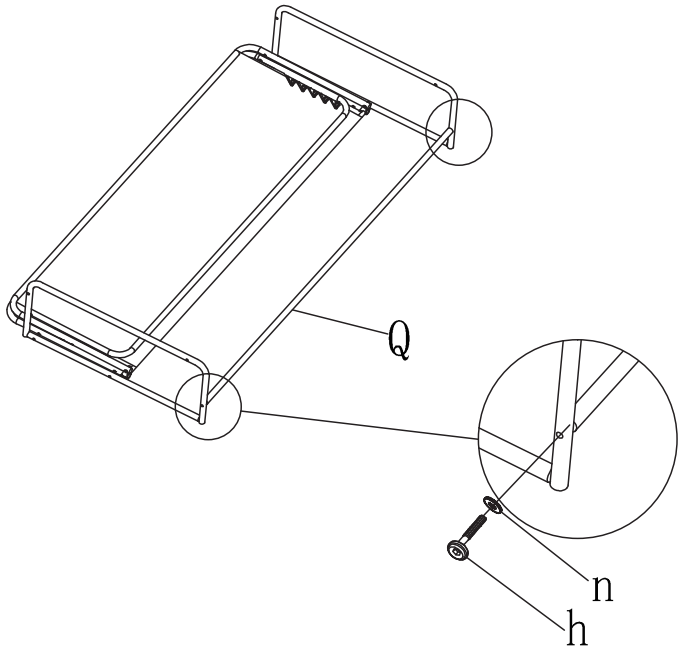

STEP 14

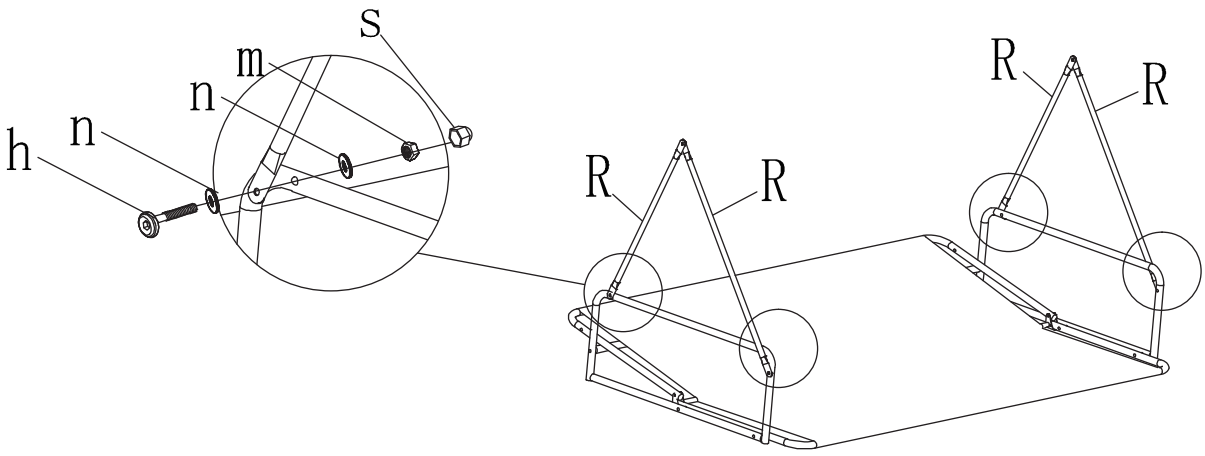

STEP 15

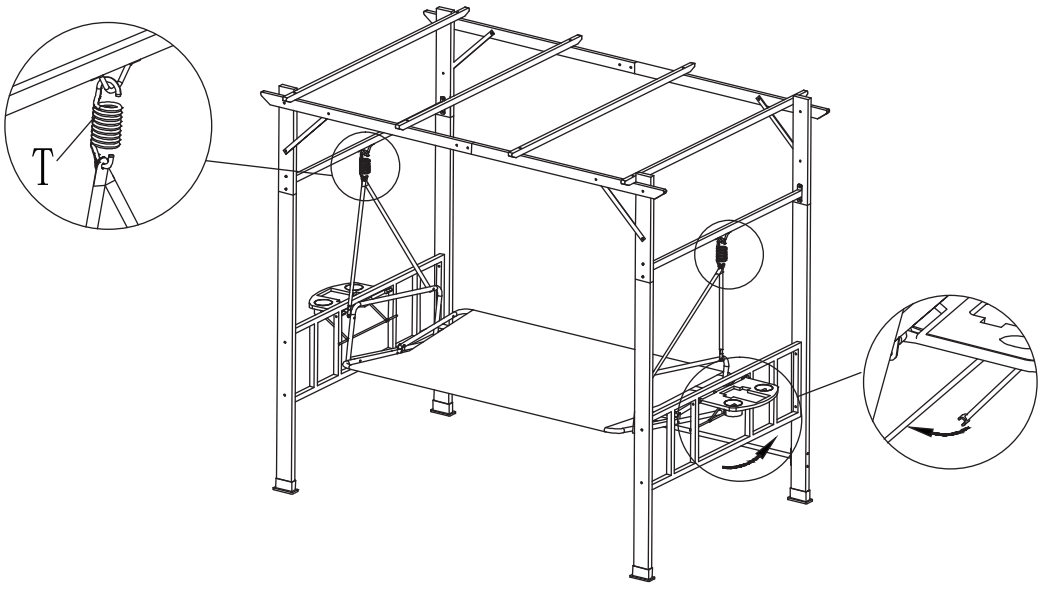

STEP 16

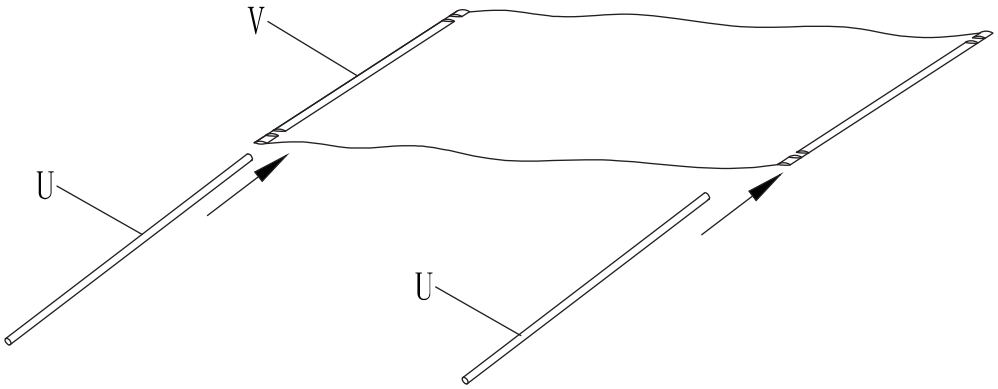

STEP 17

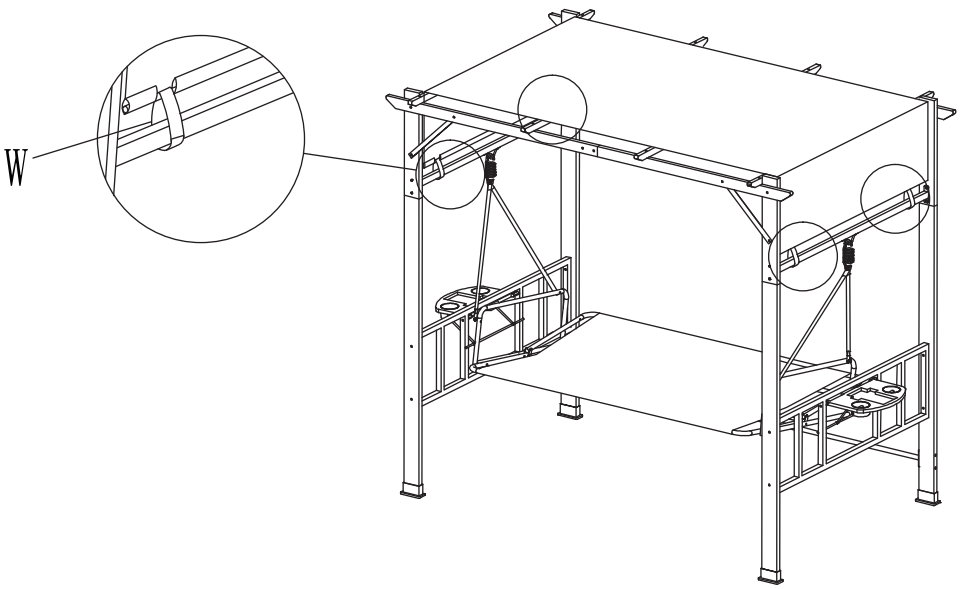

STEP 18

