INSTALLATION
Product Manual

IMPORTANT INFORMATION!

Please read the entire manual before starting to assemble and/or using this product. Follow the manual thoroughly and keep it for further reference.

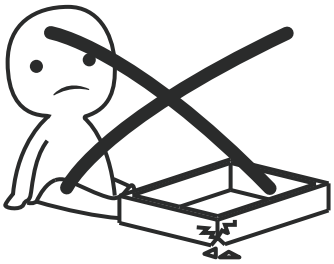

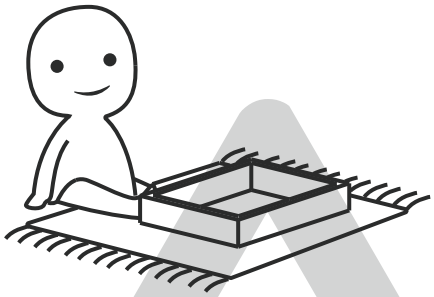

AVOID SCRATCHES!

In order to avoid scratching this furnuture should be assembled on a soft layer-could be a rug.

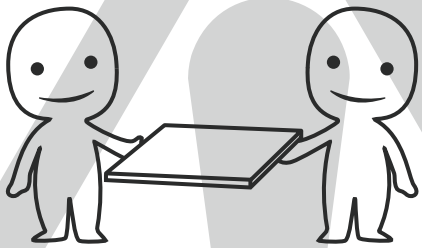

IMPROVE EFFICIENCY !

Try to find a partner to install with you, which can speed up the installation efficiency and shorten the time.

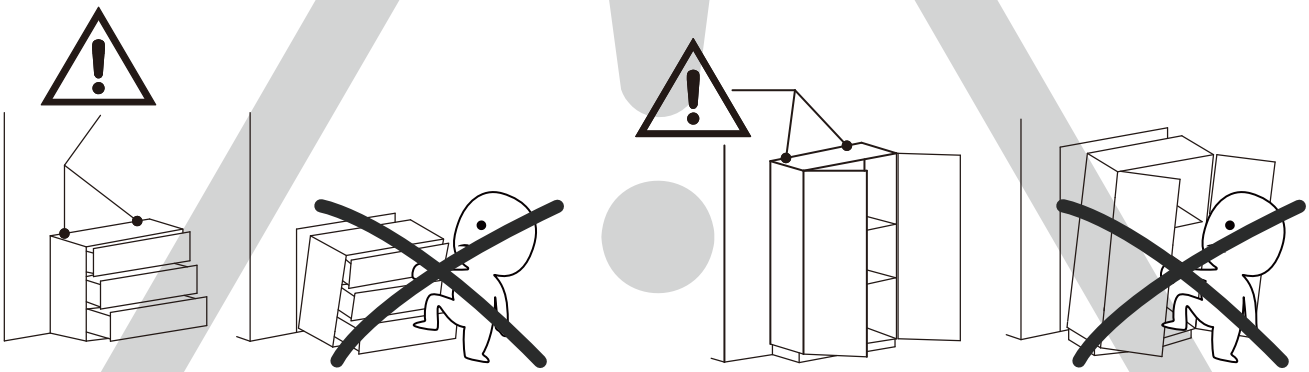

ANTI-TOPPLE WARNING !

Overturned furniture can cause serious or fatal crush injuries. To prevent tipping over, be sure to use the wall attachment, if not included with this product. Please purchase the wall attachment that fit your wall. If unsure, seek professional advice. Please read and follow each step of the instructions carefully.

IMPORTANT !

It is important that any product which is assembled using any kind of screw is re-tightened 2 weeks after assembly,and once every 3 months - in order to assure stability through-out the lifespan of the product.

For regular maintenance and cleaning of the product, for the frame, please use a rag dipped in neutral detergent to fully wipe it, and then dry it with a clean rag.For glass materials, wipe with a rag dampened with water glass cleaner, and then dry with a dry rag.

Do not use an electric screwdriver, and do not use too much force when installing, because the board is easy to break.

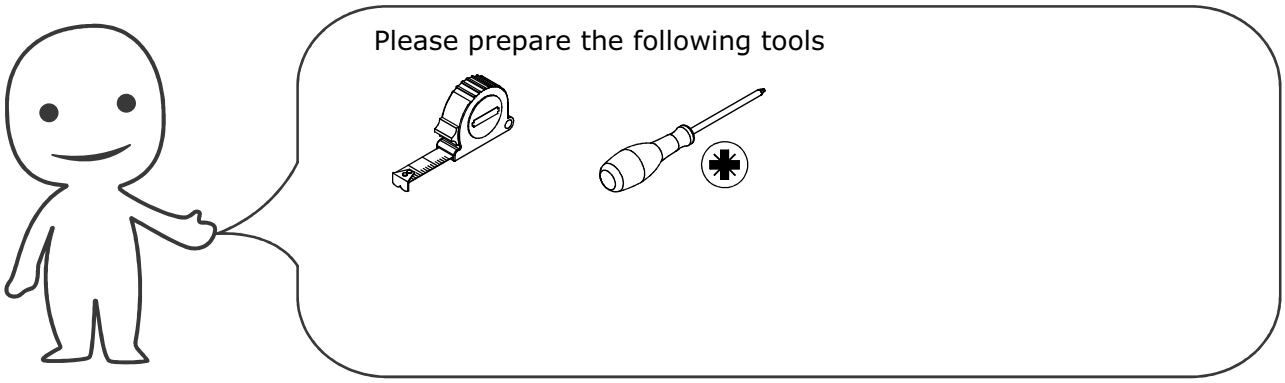

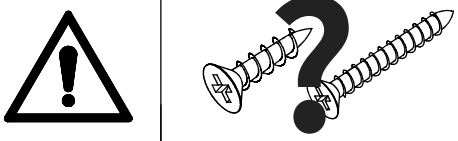

When installing, please carefully confirm whether each screw corresponds to the manual, accessories with similar shapes can be distinguished by size

A x 48+4	B x 36+3	C x 32+3	D x 2	E x 32+3
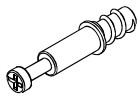 ∅6 x 35 mm	∅15 x 11 mm	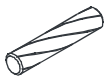 ∅8 x 30 mm	L = 350mm	∅3 x 12 mm

F x 2	G x 2	H x 8	J x 2	K x 4
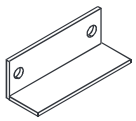	∅6 x 25 mm	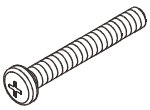 ∅6 x 35 mm	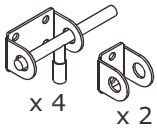 x 4 x 2	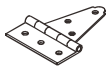

L x 12+1	M x 6	N x 58+5	P x 2	Q x 6
		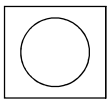	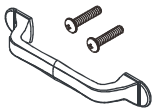 ∅4 x 18 mm	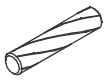 ∅6 x 30 mm

R x 8	S x 8	T x 20+2	U x 44+4
∅4 x 30 mm	∅15 x 9.5 mm	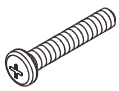 ∅6 x 30 mm	∅3.5 x 14 mm

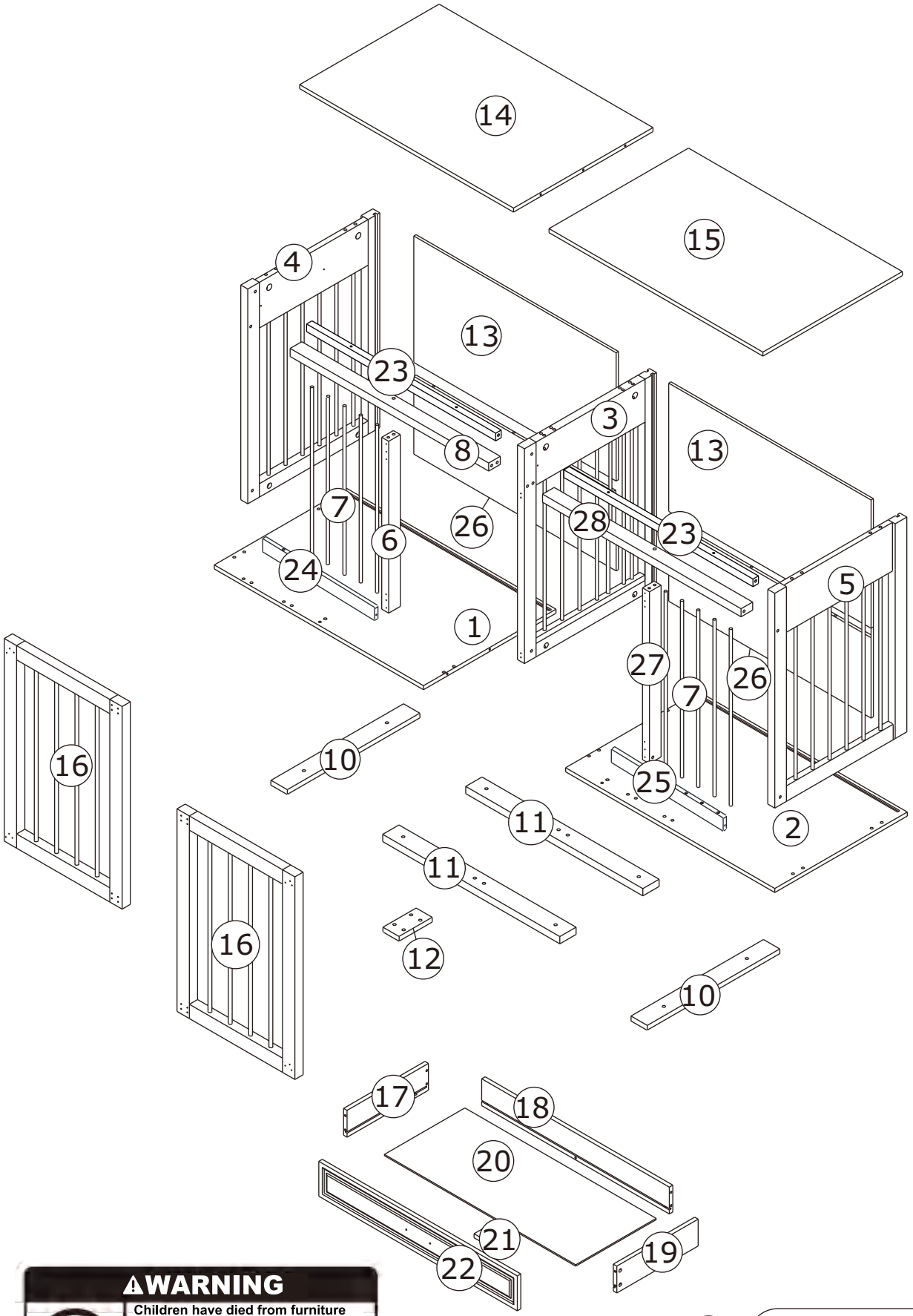

x 2

⚠WARNING

Children have died from furniture tipover.To reduce the risk of furniture tipover:

- ALWAYS install tipover restraint provided.
- NEVER put aTV on this product.
- NEVER allow children to stand,climb or hang on drawers,doors,or shelves.
- NEVER open more than one drawer at a time.
- Place heaviest items in the lowest drawers.

This is a permanent label.
Do not remove!

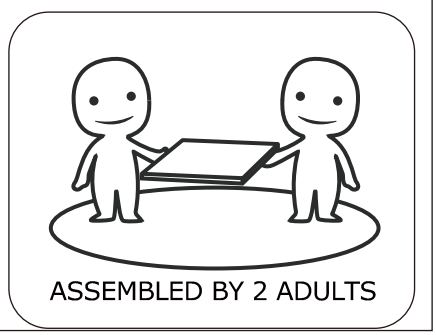

1

A x 2	D x 1	E x 4	
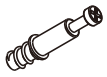	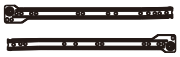		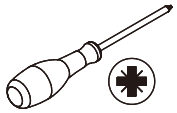
∅6 x 35 mm	L = 350 mm	∅3 x 12 mm	

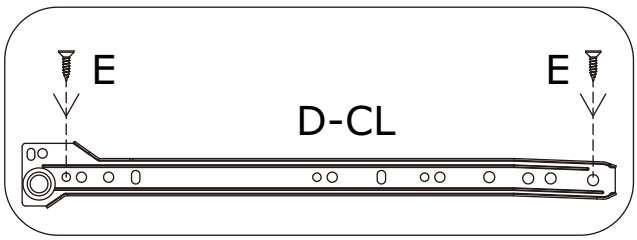

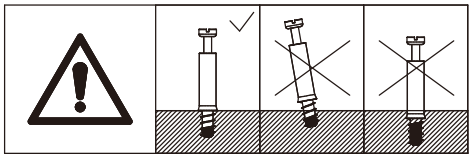

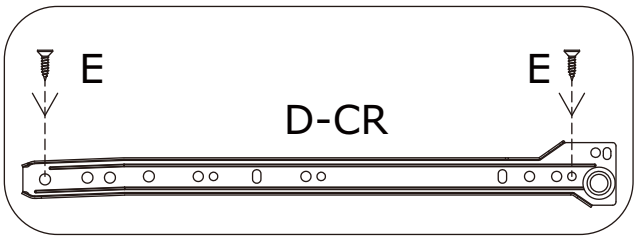

Fix rail(CL) and (CR) to board 4 and 5 respectively with screw(E) as shown. Screw eccentric rod(A) into board 4 and 5 as shown.

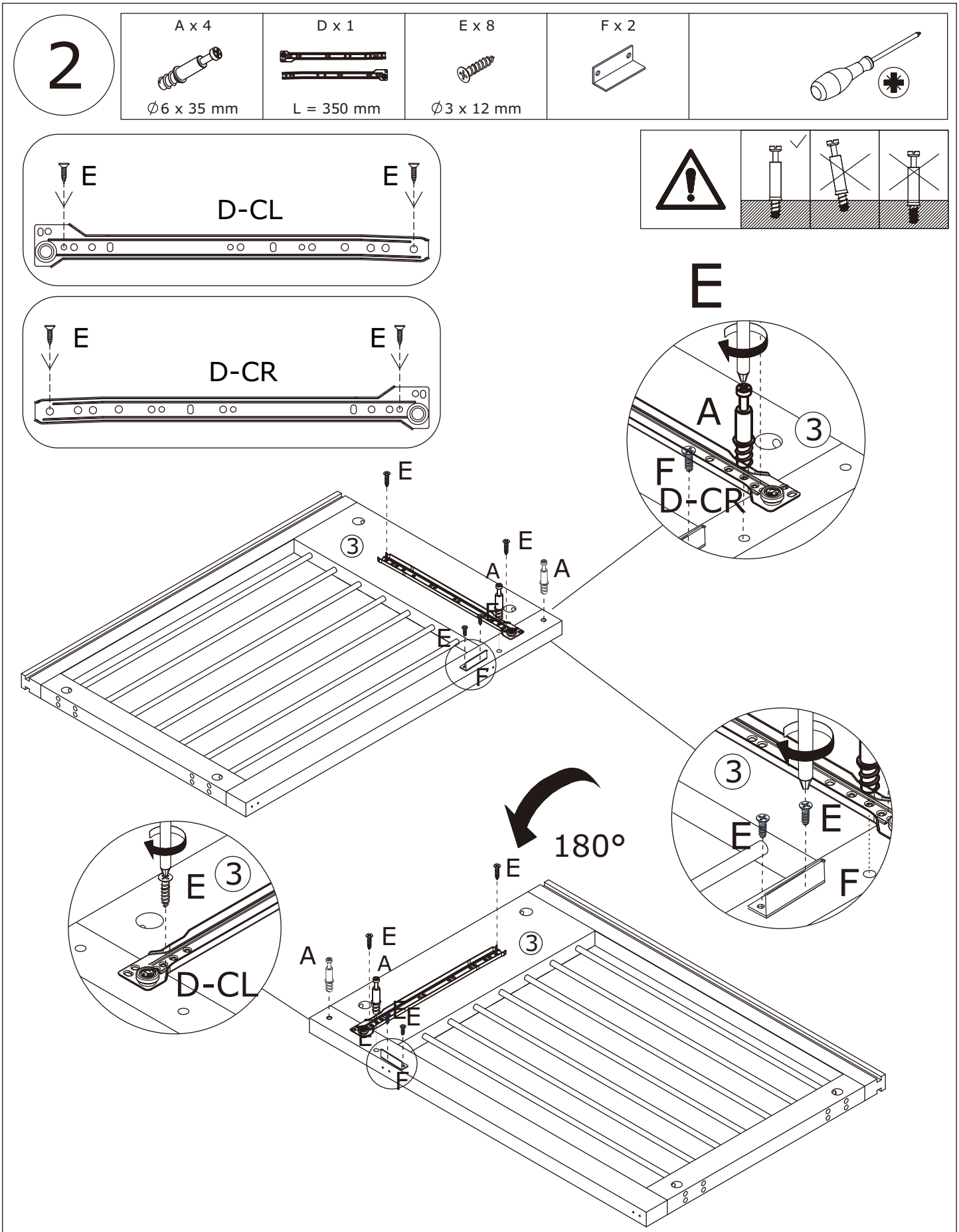

Fix rail(CR) to board 3 with screw(E), screw eccentric rod(A) into and fix part(F) at first.
Flip to back, fix rail(CL), screw eccentric rod(A) into and fix part(F) with screw(E) as shown.

3

C x 3	T x 18	
		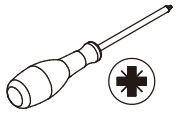
∅8 x 30 mm	∅6 x 30 mm	

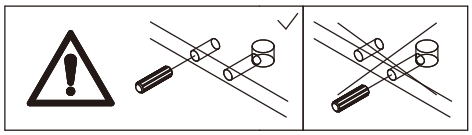

Connect board 1 to board 2 using wooden dowel(C) at first.
Fix board 10, 11 and 12 to board 1 and 2 with screw(T) as shown.

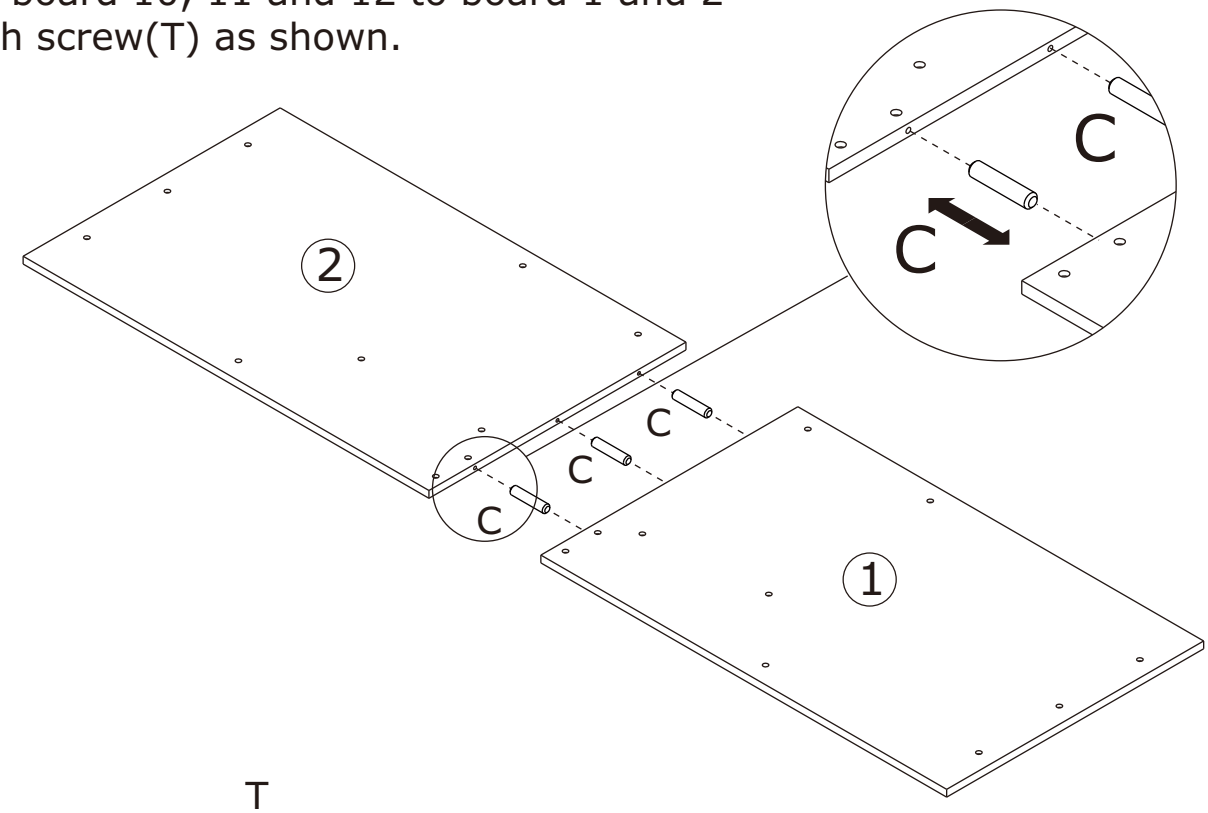

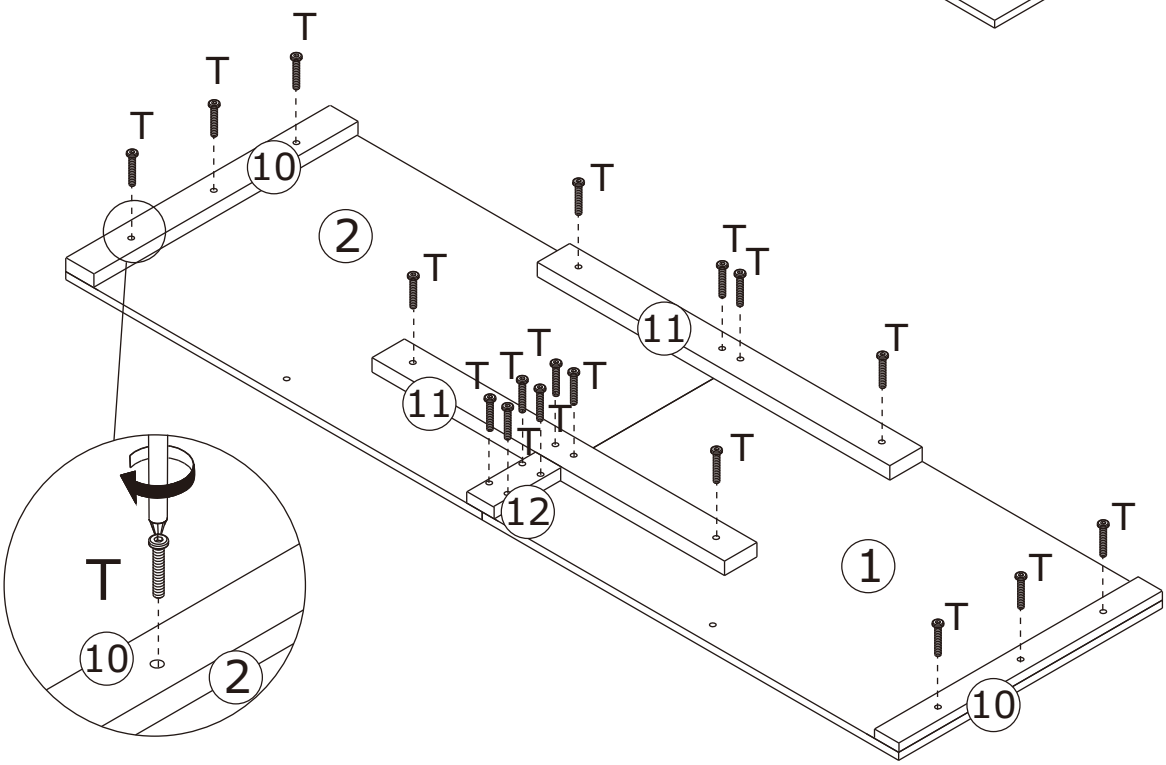

4

A x 12	C x 14	
		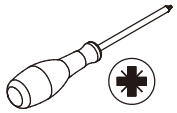
∅6 x 35 mm	∅8 x 30 mm	

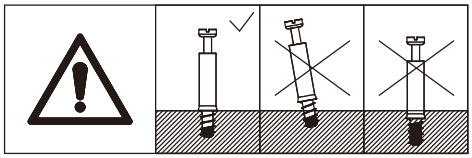

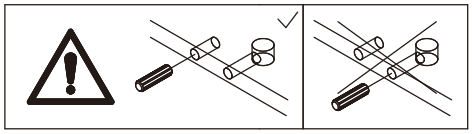

Flip the part to back, screw eccentric rod(A) and insert wooden dowel(C) into board 1 and 2 as shown.

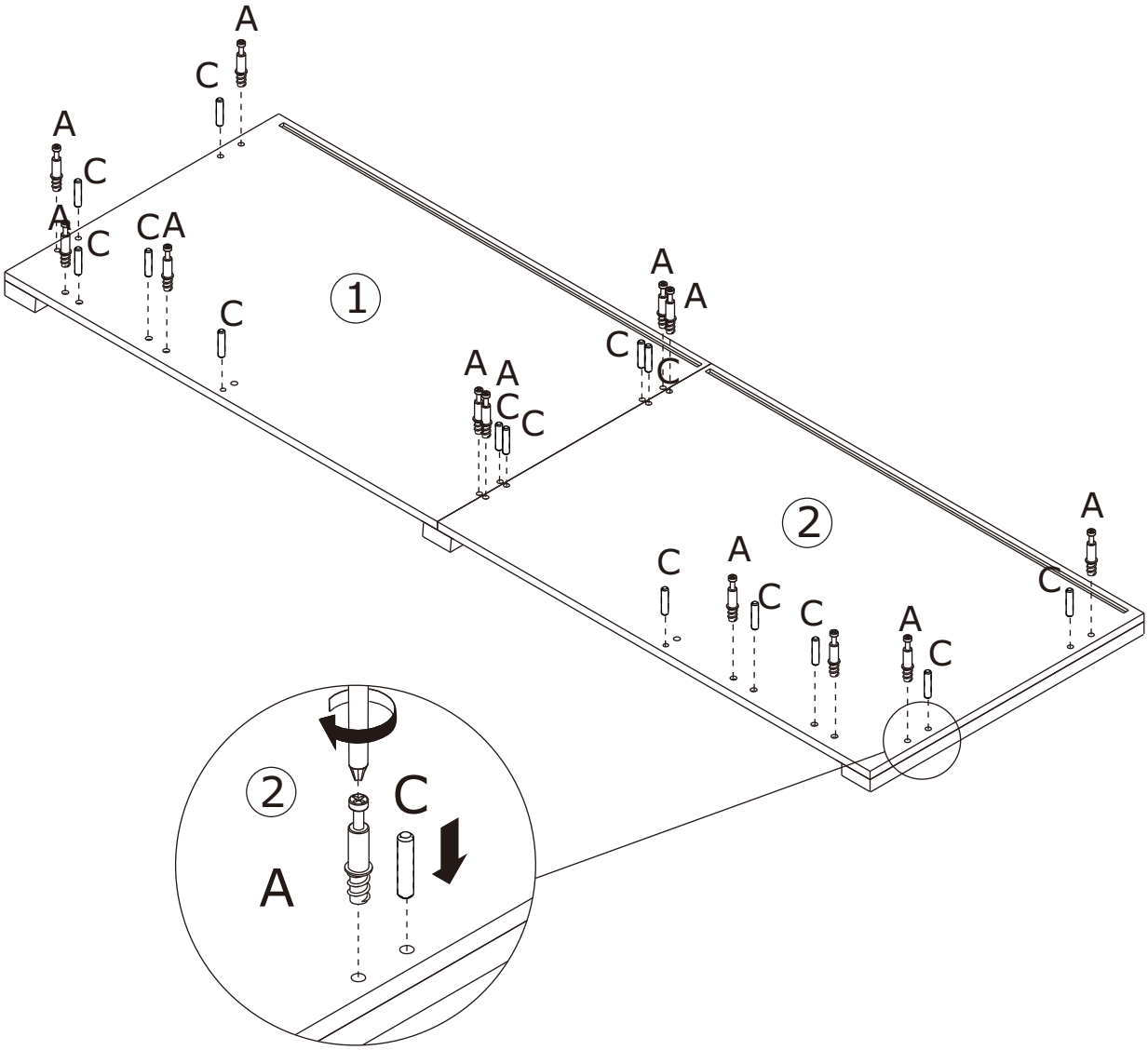

5

B x 4

∅15 x 11 mm

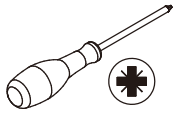

Attach board 3 to board 1 and 2, add cam lock(B) into board 3 and turn clockwise to tighten as shown.

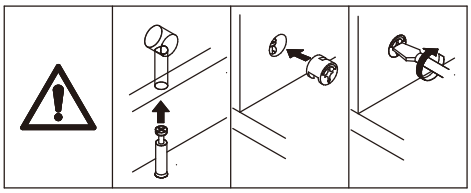

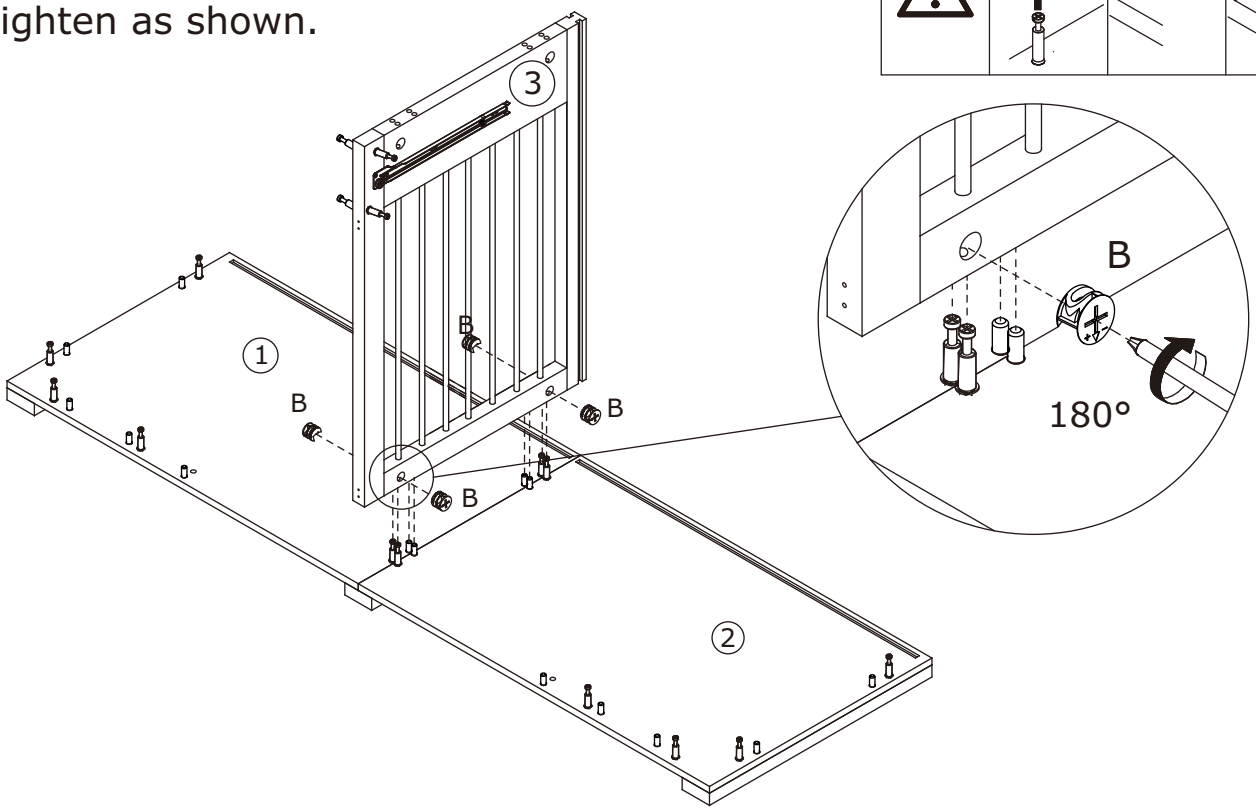

6

A x 2

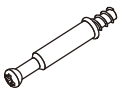

∅5 x 31 mm

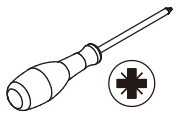

Screw eccentric rod(A)
into board 6 and 27 as shown.

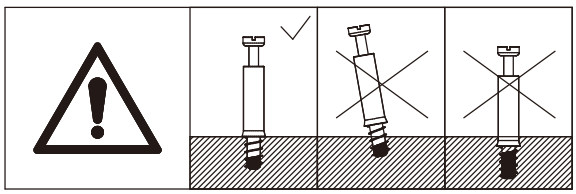

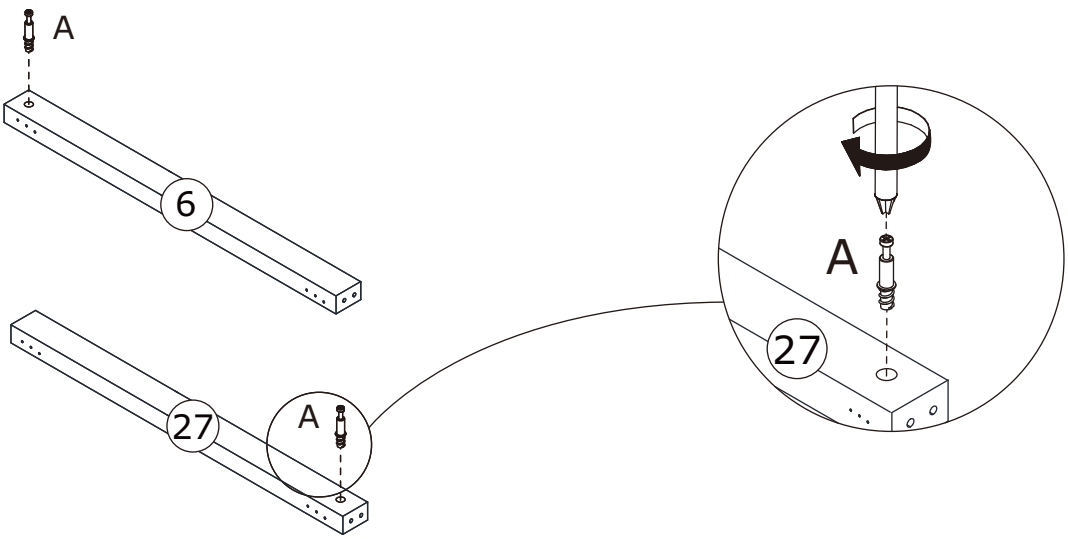

7

B x 2

∅15 x 11 mm

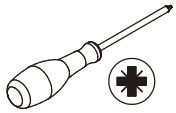

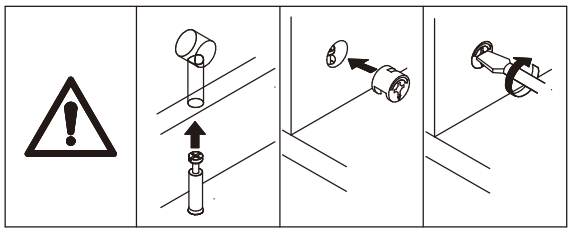

Attach board 24 to board 6;
board 25 to board 27, add cam lock(B)
and turn clockwise to tighten as shown.

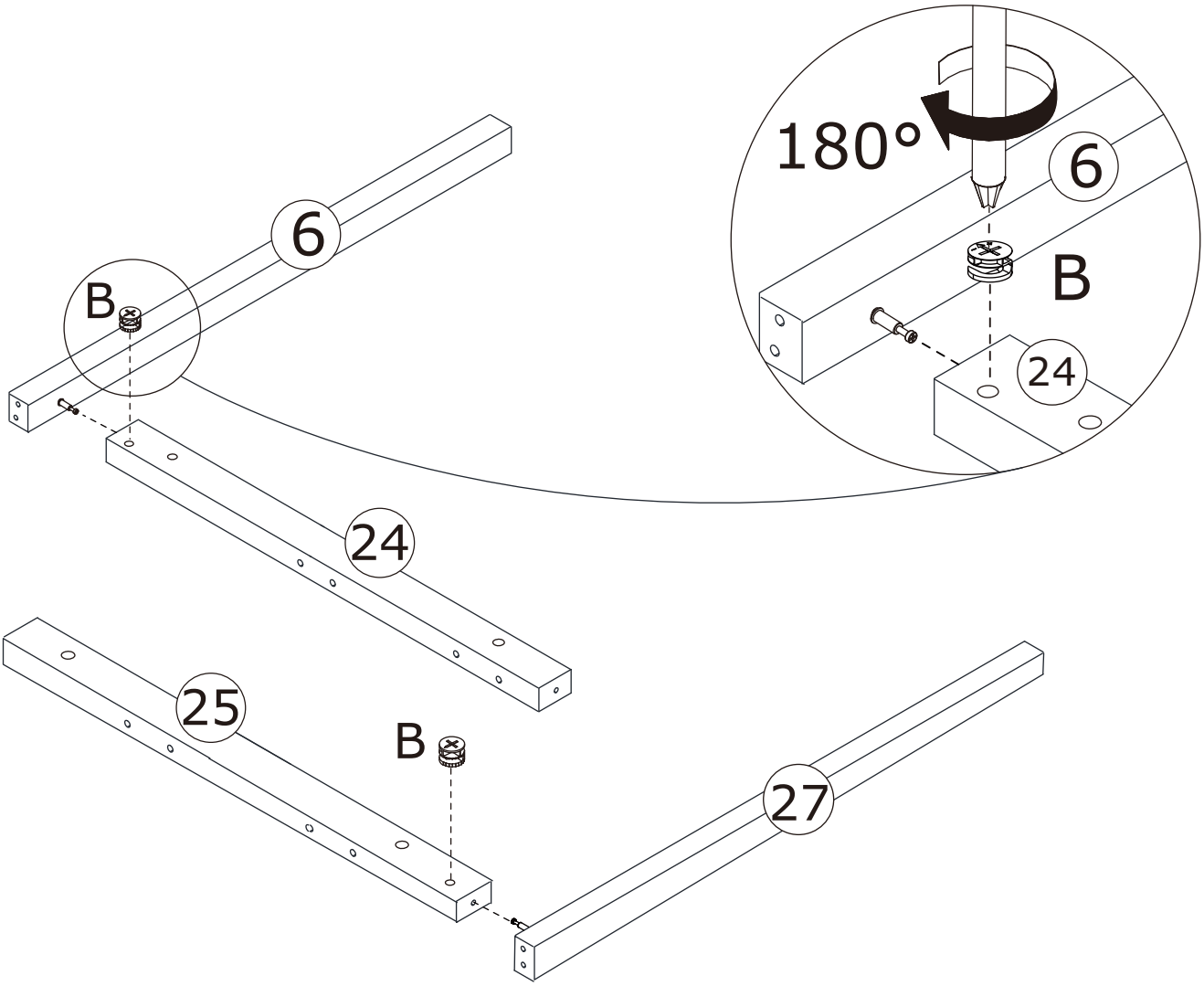

8

C x 2	T x 2	
		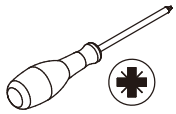
∅8 x 30 mm	∅6 x 30 mm	

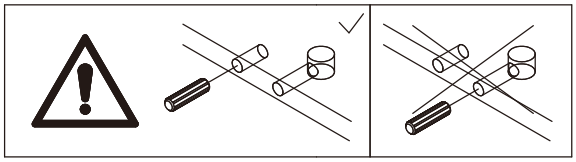

Insert rod 7 into board 8 and 28 at first.
Attach board 24 and 6 to board 8 and rod 7 using wooden dowel(C), and fix with screw(T) as shown.
Attach board 25 and 27 to board 28 and rod 7 using wooden dowel(C) , and fix with screw(T) as shown.

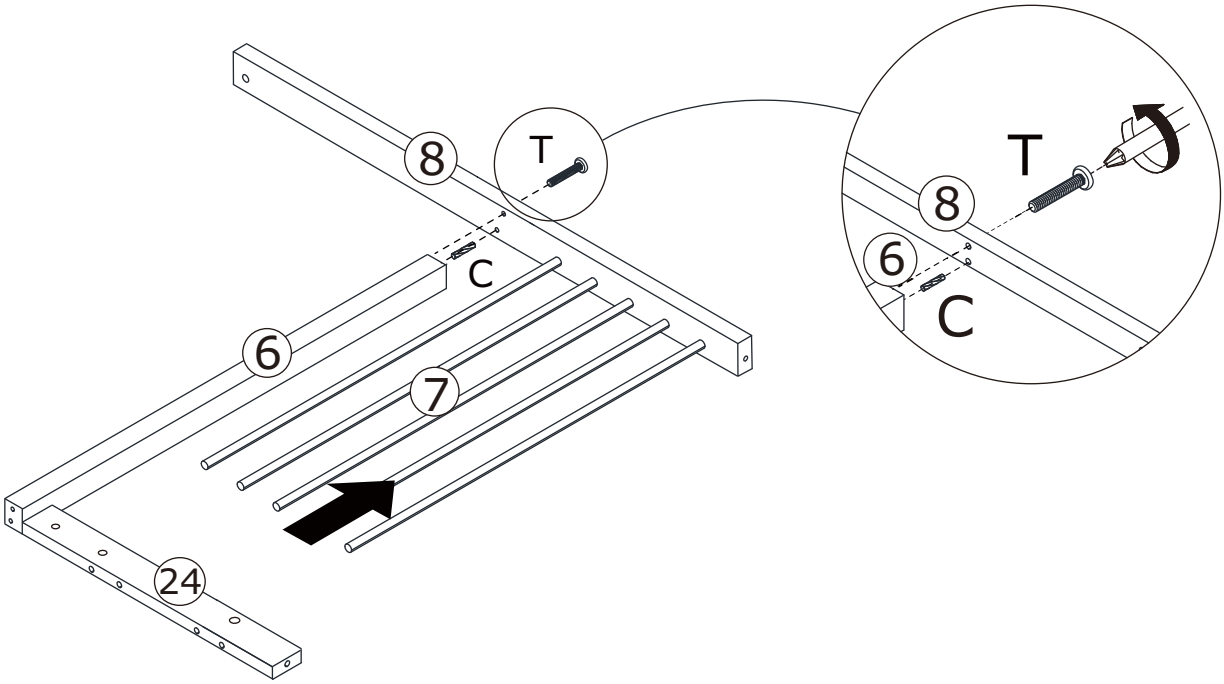

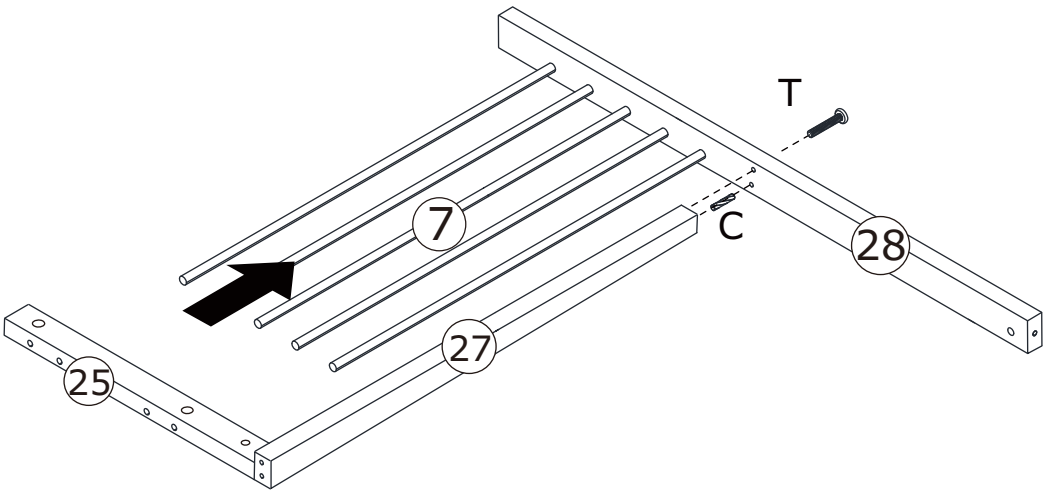

9

B x 6	G x 2	
∅15 x 11 mm	∅6 x 25 mm	

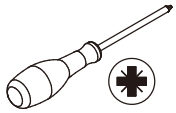

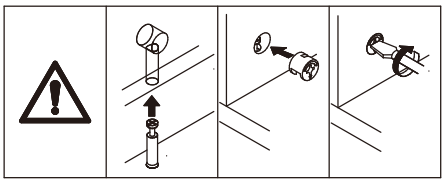

Attach the two components to board 1, 2 and 3, add cam lock(B) into board 24,25,8,28 and turn clockwise to tighten at first.
Fix board 6 to board 1; board 27 to board 2 using screw(G) as shown.

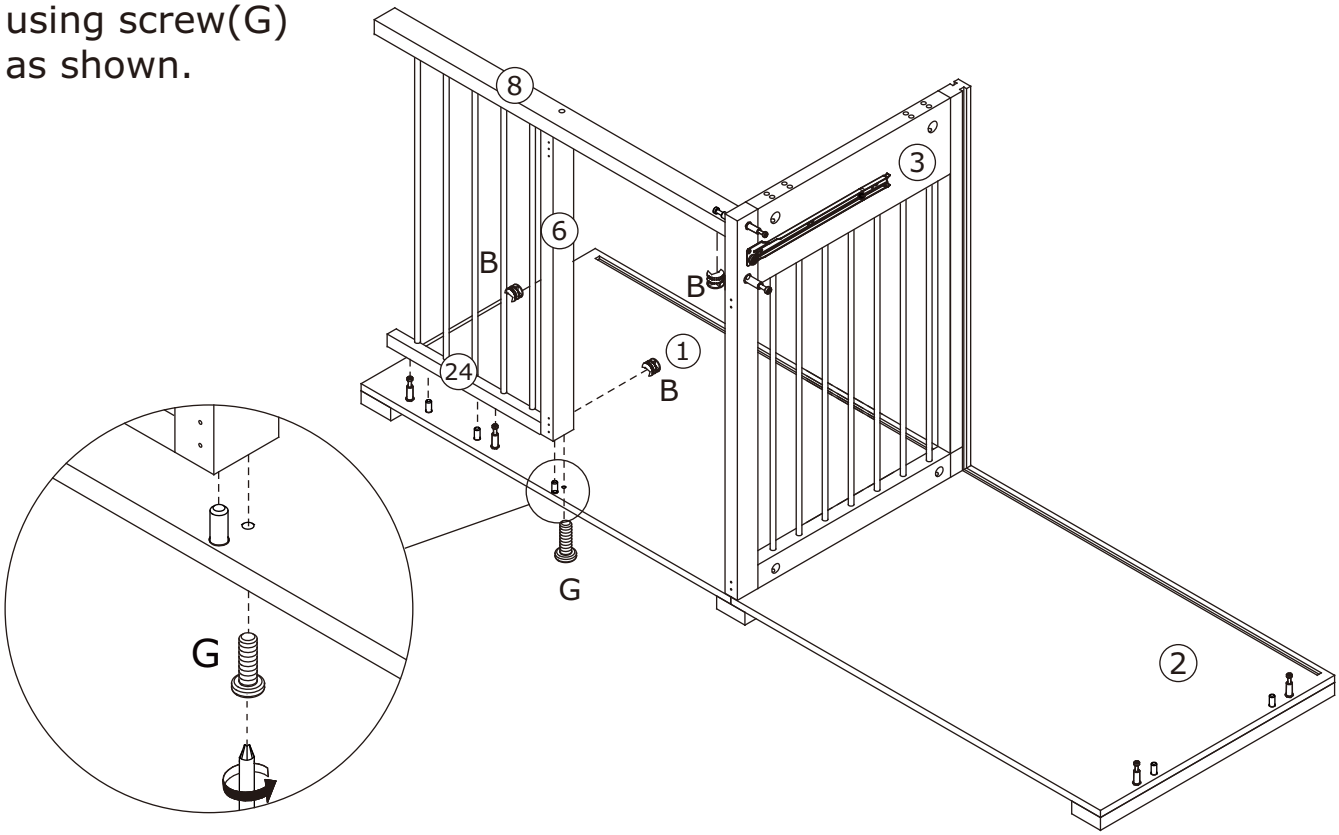

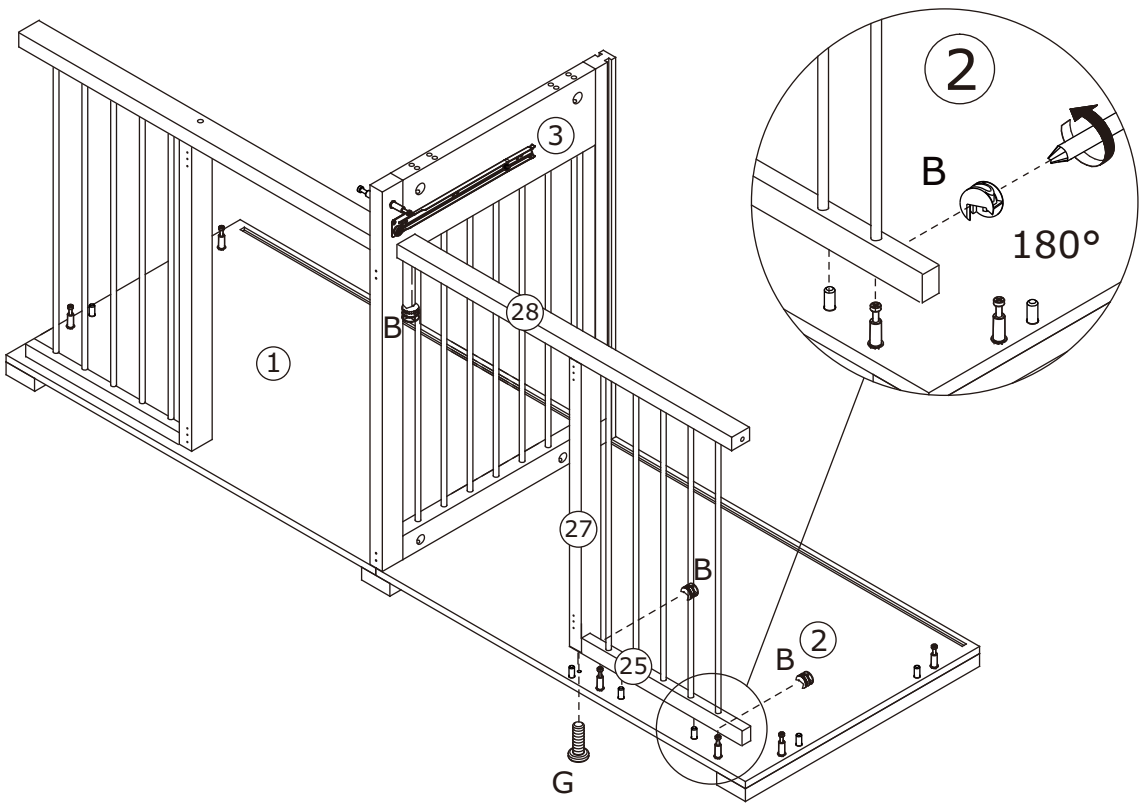

10

B x 8

∅15 x 11 mm

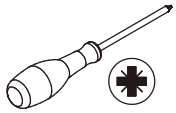

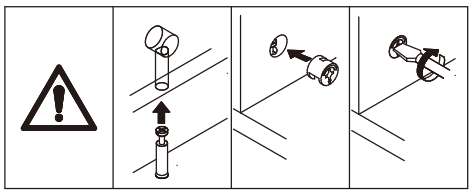

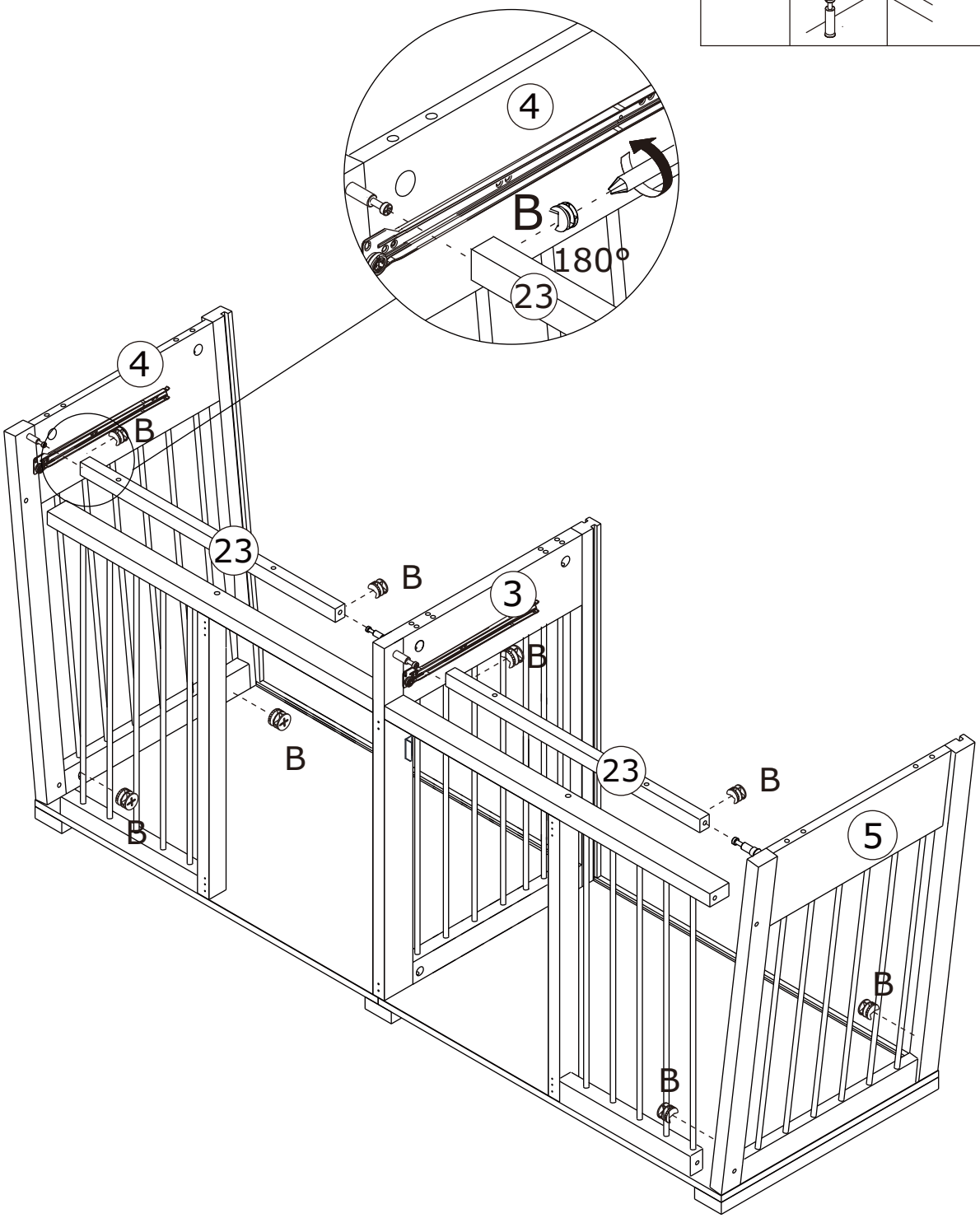

Connect board 4 and 5 to board 23 and 3, add cam lock(B) into board 23 and turn clockwise to tighten at first.
Attach board 4 and 5 to board 1 and 2, add cam lock(B) into board 4,5 and turn clockwise to tighten as shown.

11

H x 4

∅6 x 35 mm

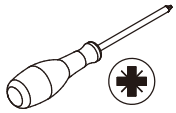

Fix board 4 to board 8 and 24 with screw(H) as shown.
Fix board 5 to board 28 and 25 with screw(H) as shown.

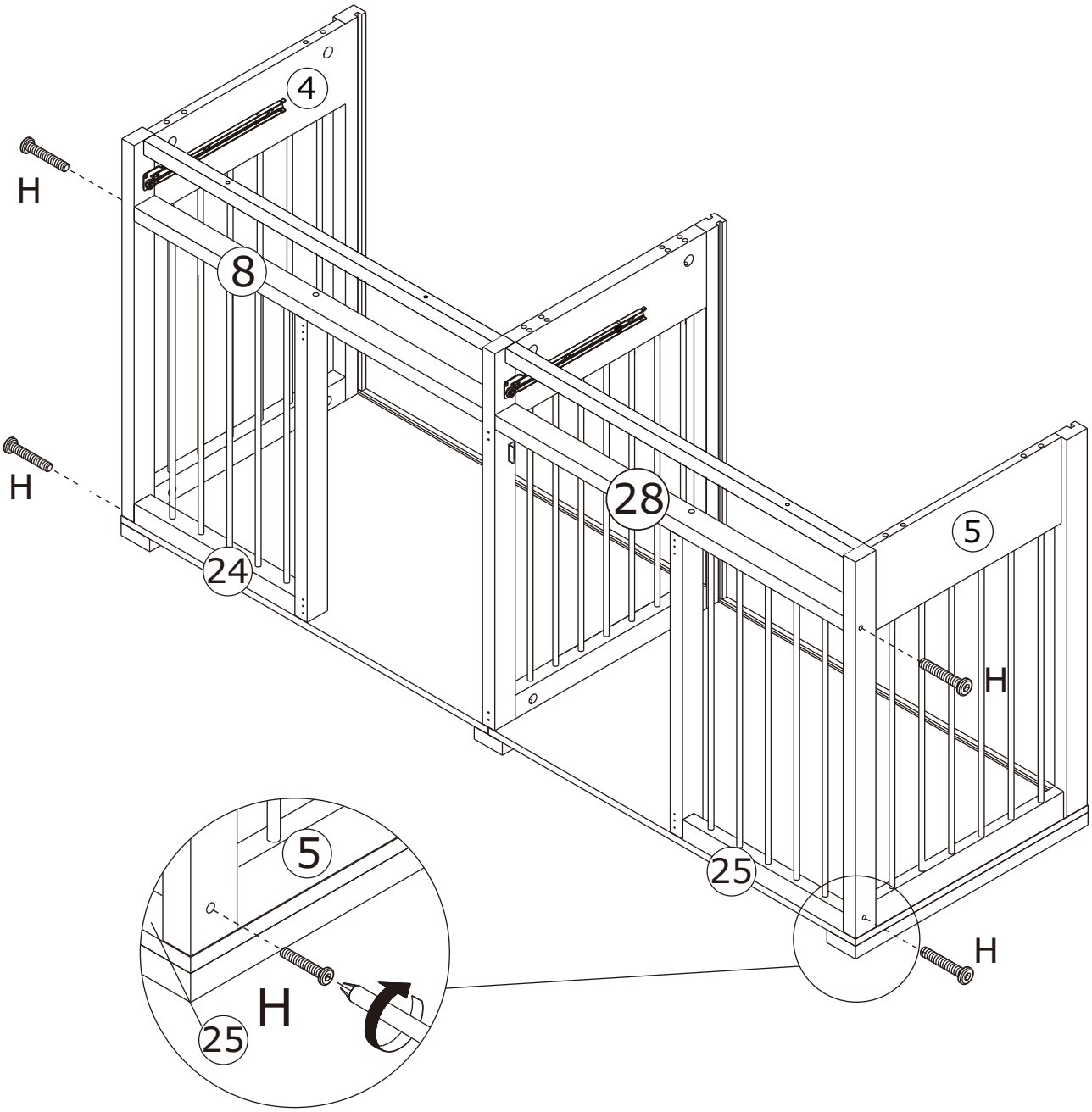

12

Q x 6

∅6 x 30 mm

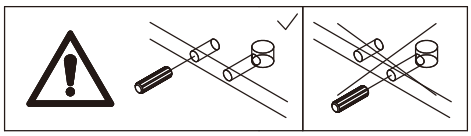

Connect board 13 to board 26 using wooden dowel(Q) at first.
Insert back board along available grooves as shown.

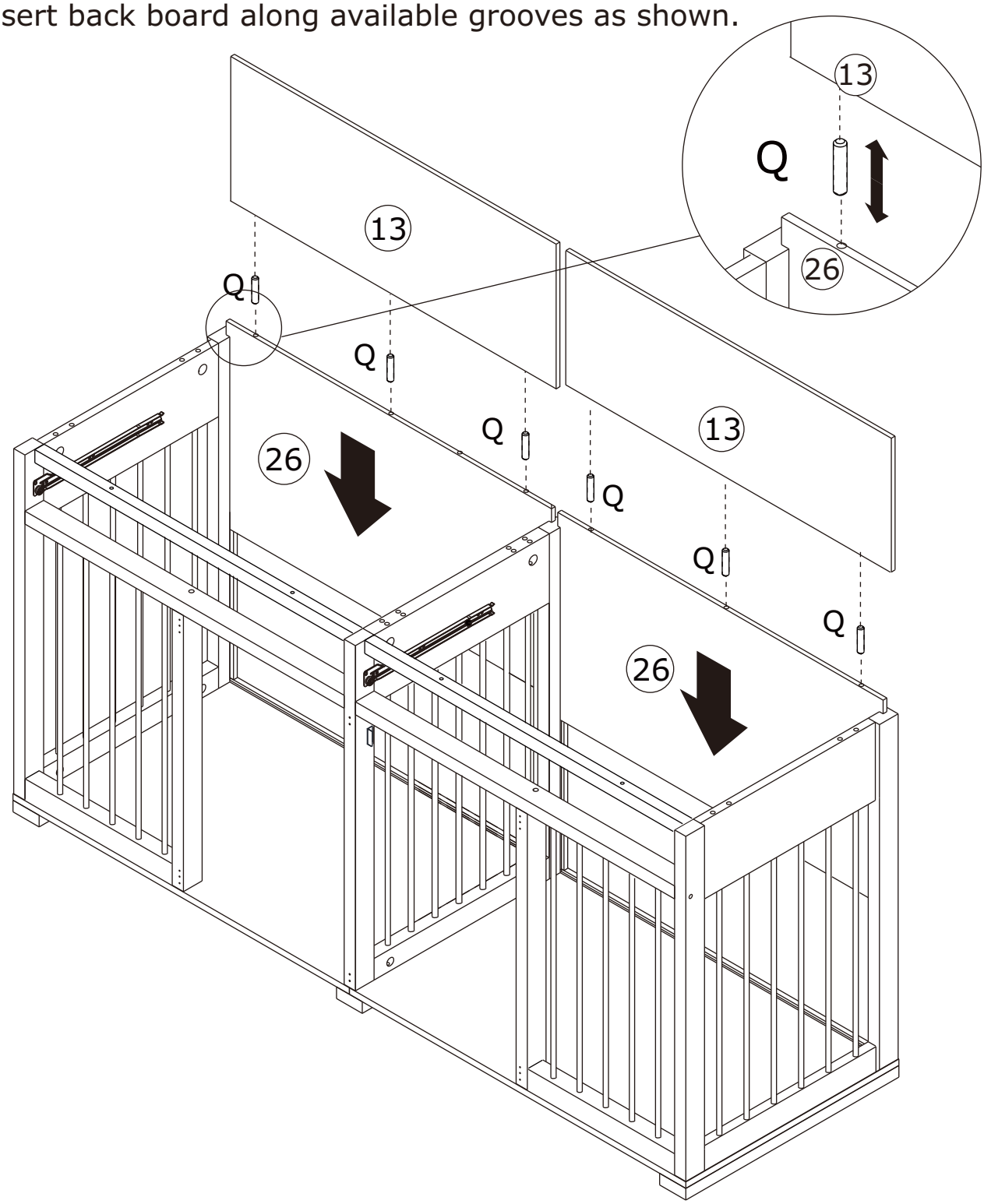

13

A x 8	C x 3	
		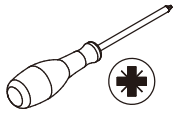
∅6 x 35 mm	∅8 x 30 mm	

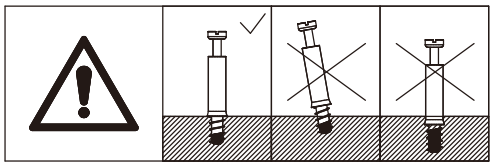

Connect board 14 to board 15 using wooden dowel(C) at firt.
Screw eccentric rod(A) into board 14 and 15 as shown.

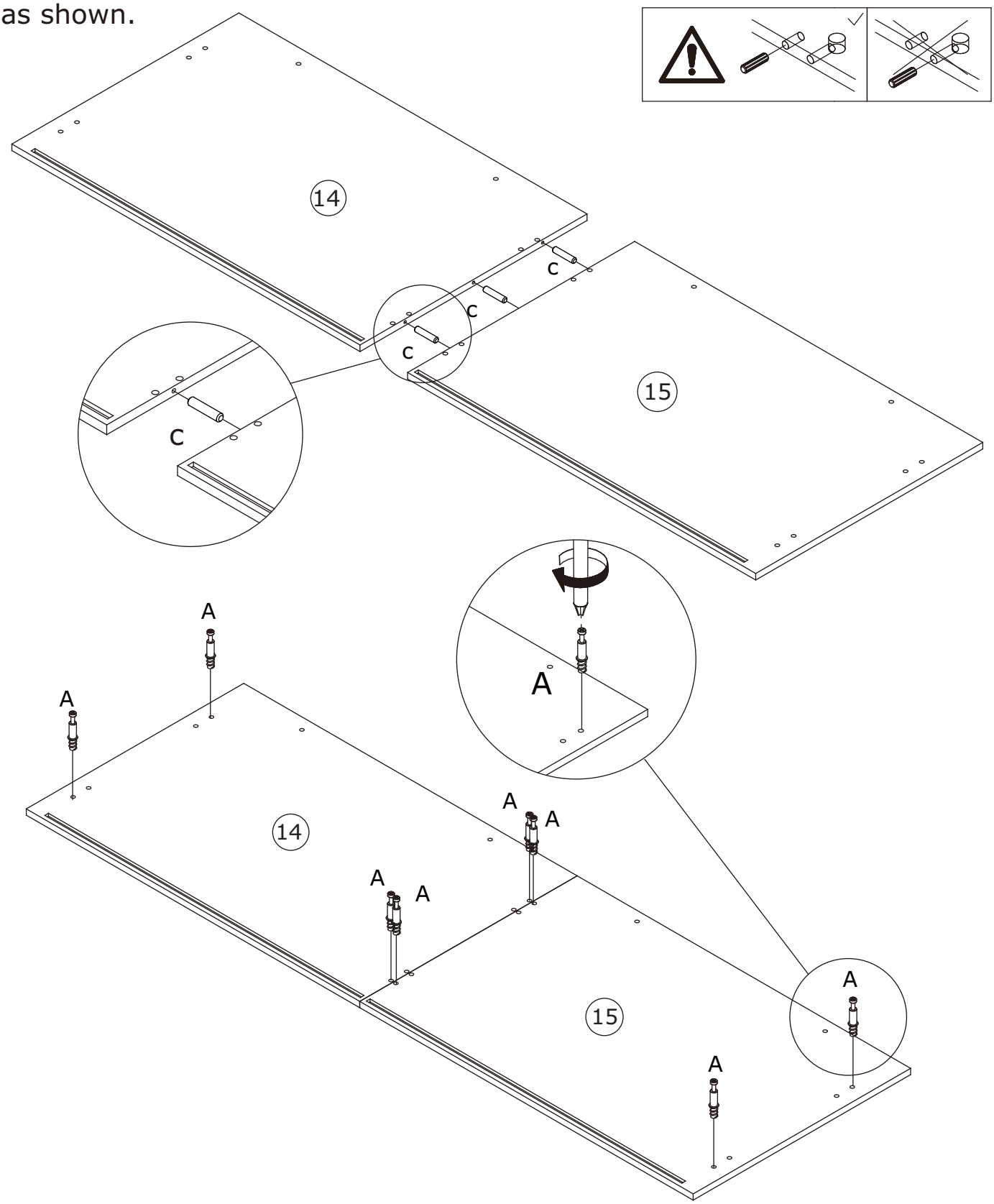

14

B x 8	C x 8	
		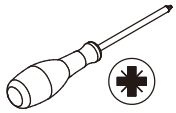
∅15 x 11 mm	∅8 x 30 mm	

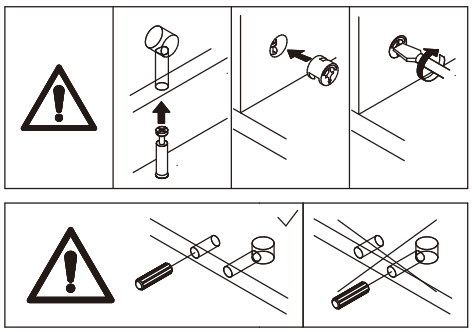

Cover board 14 and 15 to the top using wooden dowel(C), add cam lock(B) into board 4,3,5 and turn clockwise to tighten as shown.

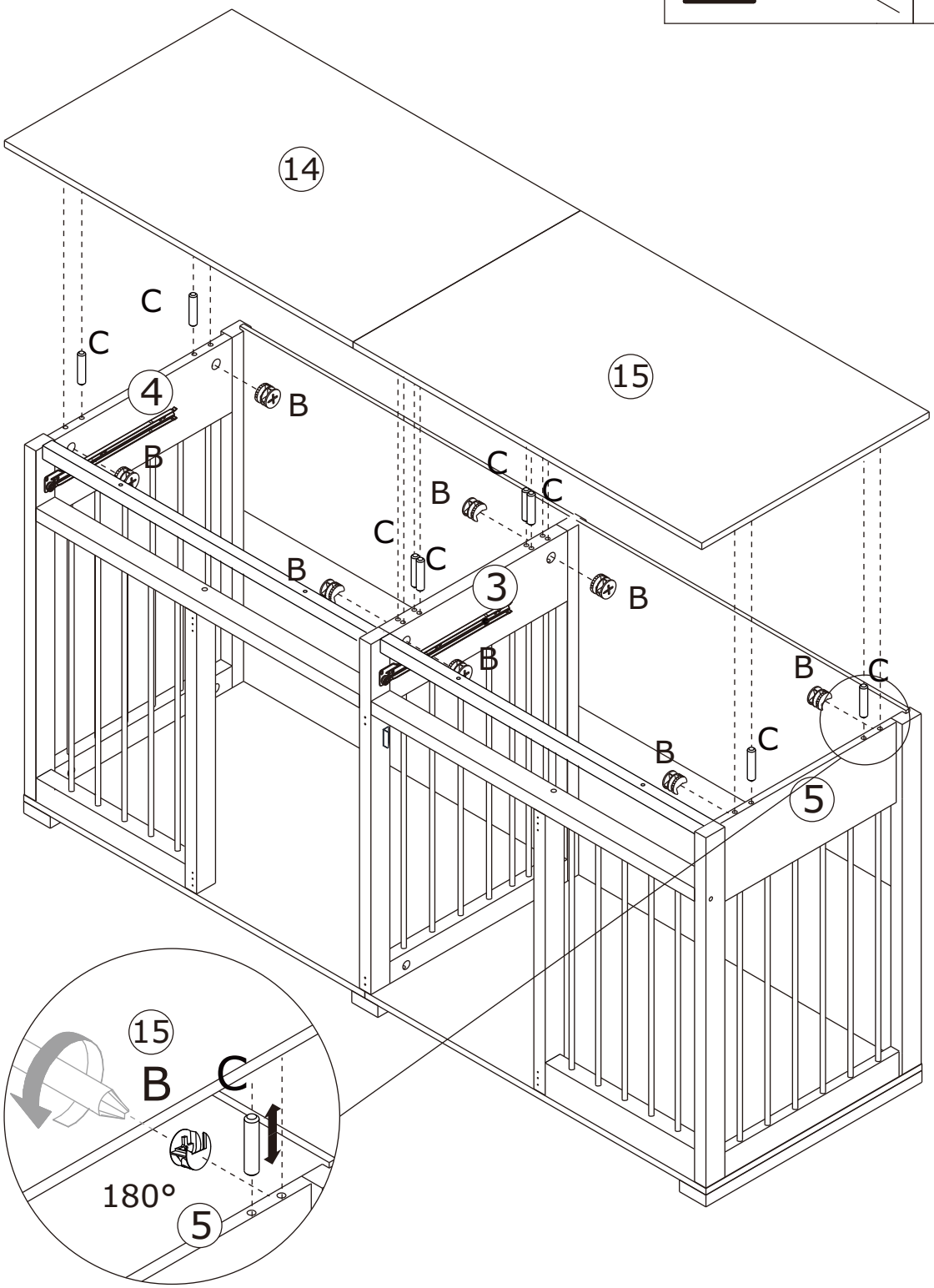

15

H x 4

∅6 x 35 mm

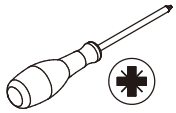

Fix board 23 to board 14 and 15 with screw(H) as shown.

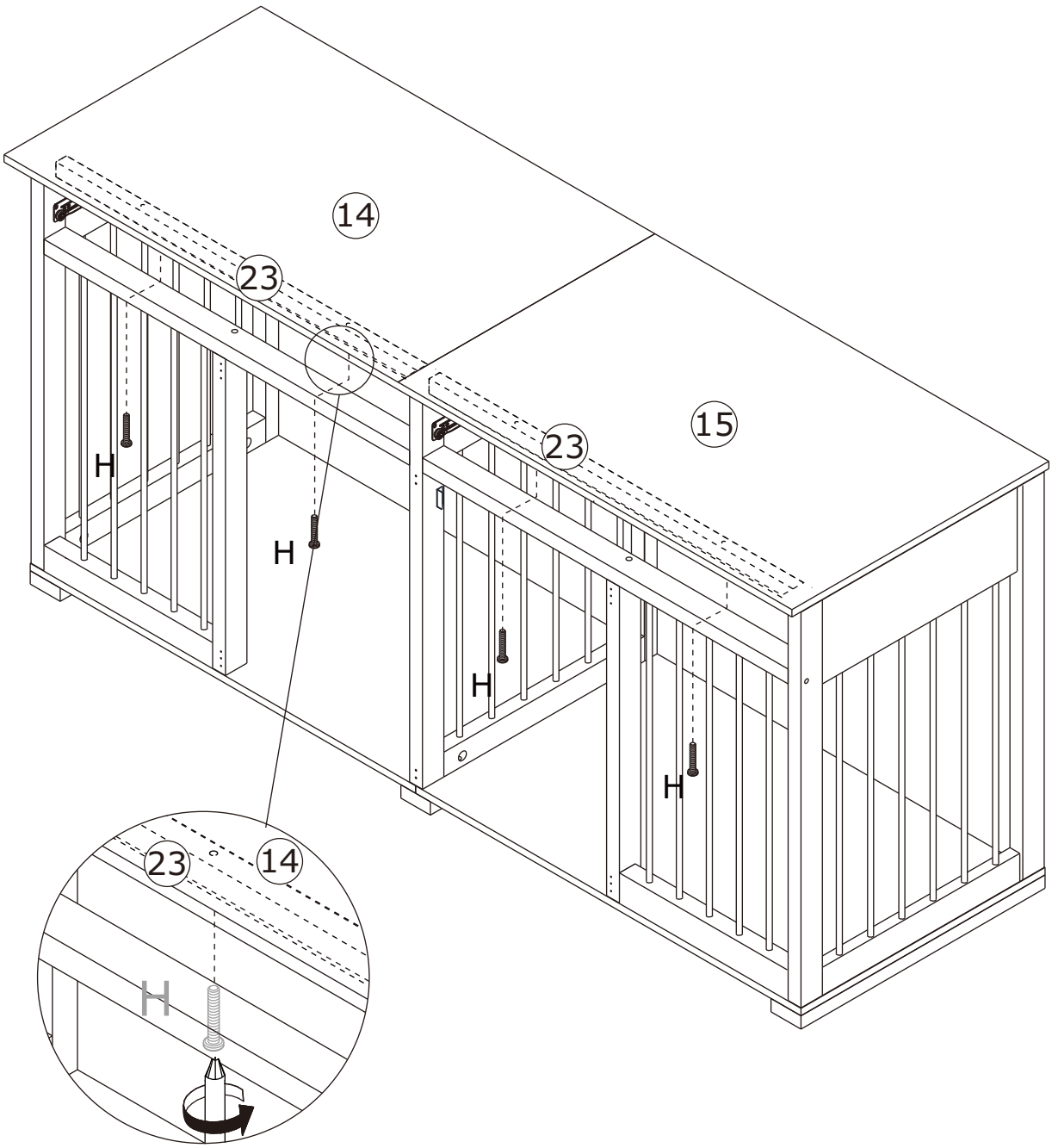

16

L x 12	E x 12	
	∅3 x 12 mm	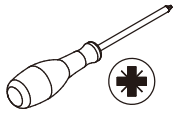

Insert buckle(L) into back slots and fix to tighten with screw(E) as shown.

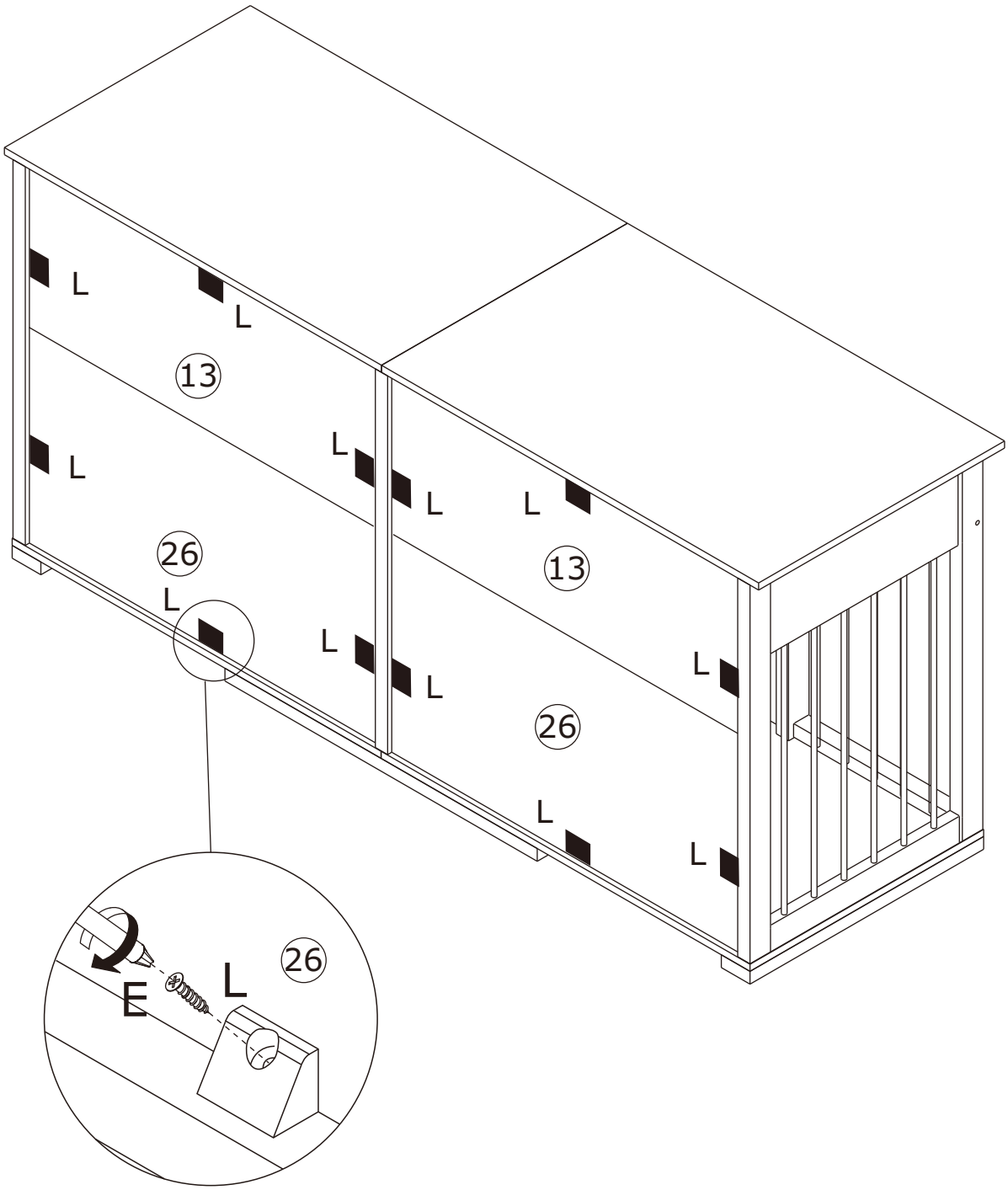

17

J x 4	K x 4	U x 28	
		∅3.5 x 14 mm	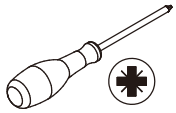

Fix hinge(K) and bolt(J) to board 16 with screws (U) as shown.

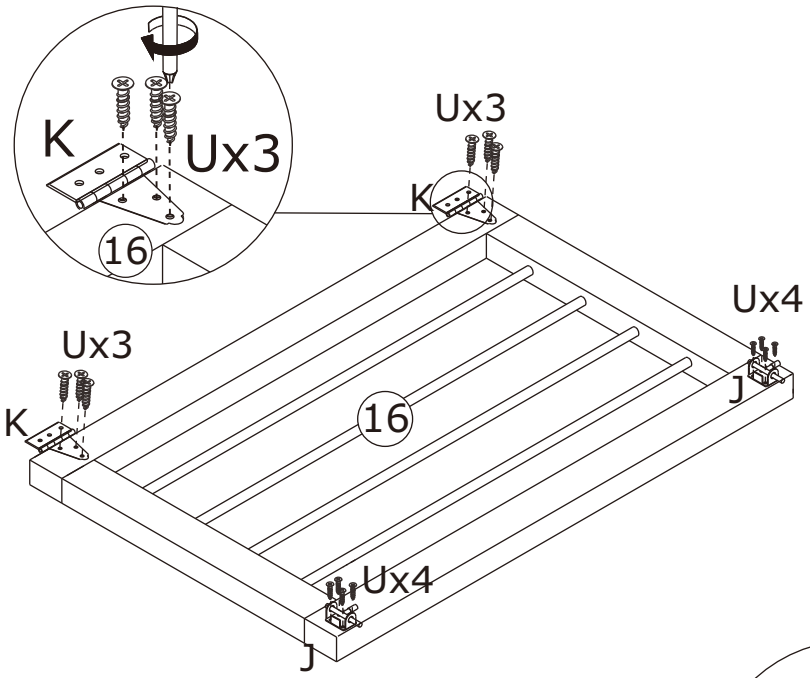

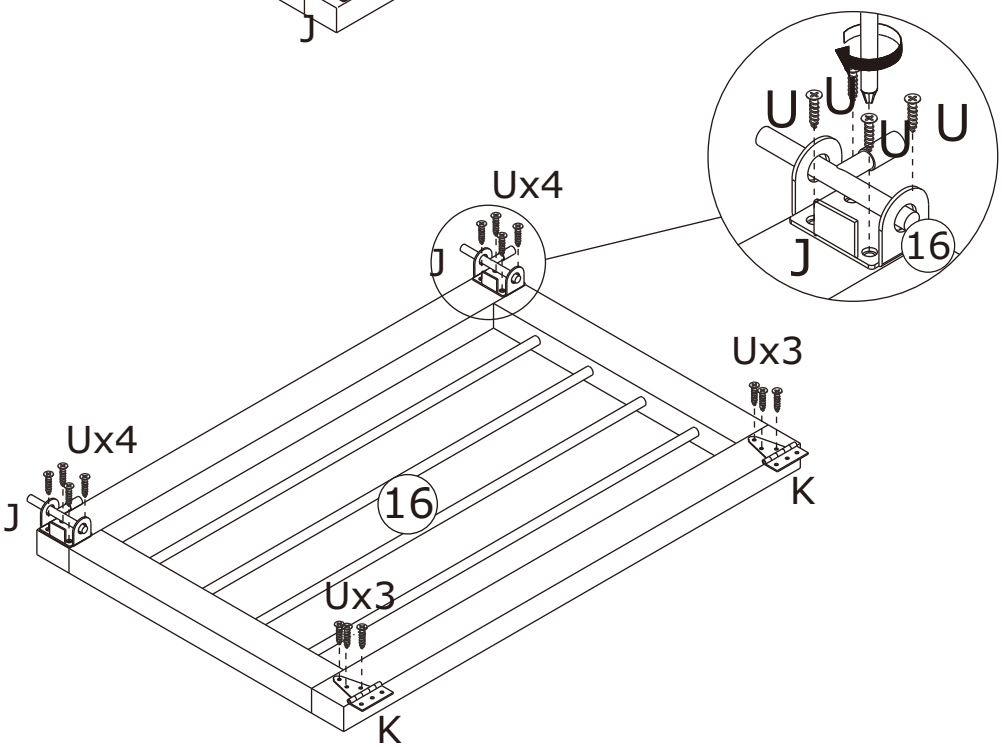

18

U x 12

∅3.5 x 14 mm

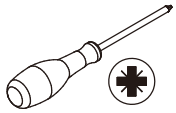

Assemble door 16 to board 6 and 27 by fixing hinge(U) as shown.

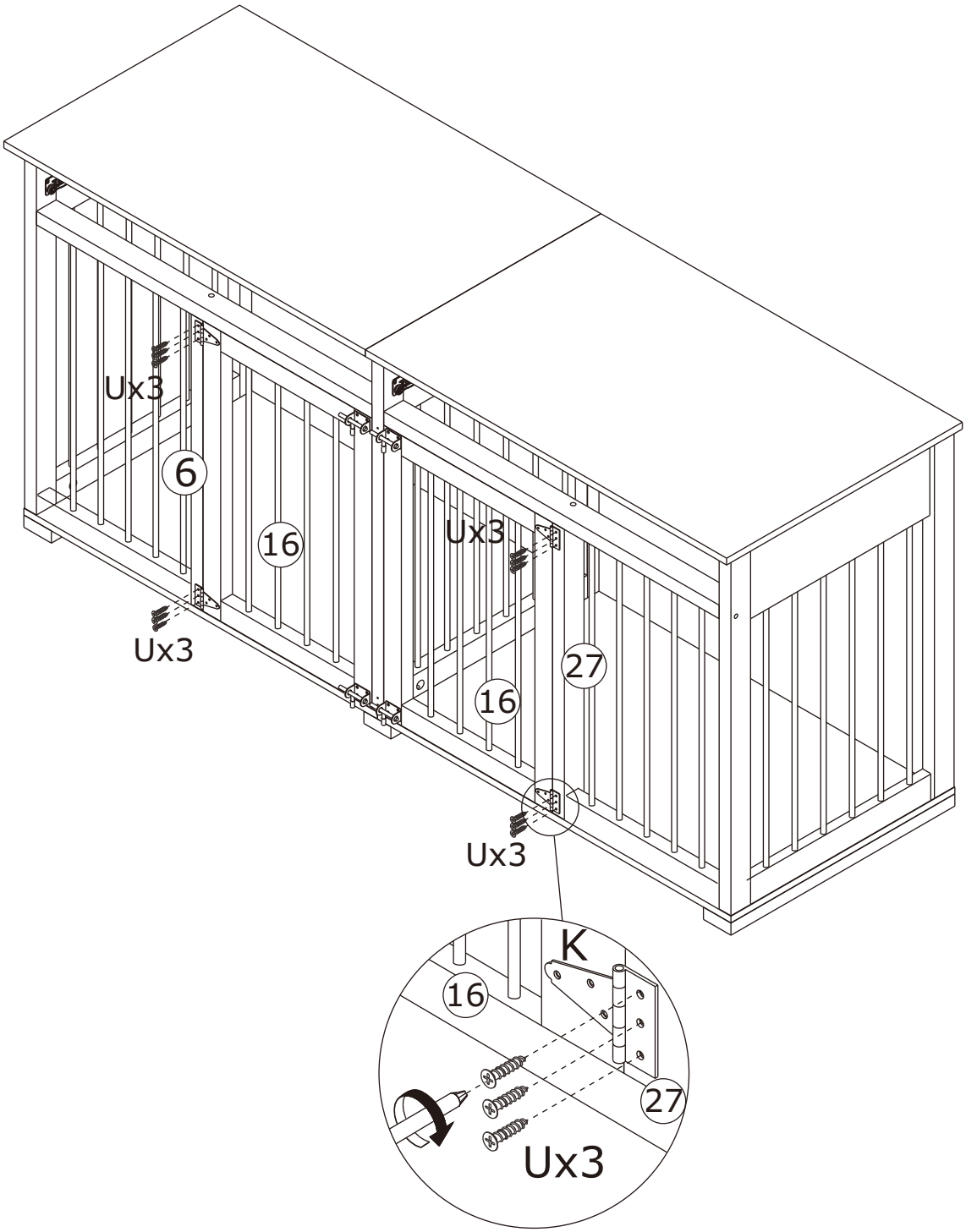

19

J x 2	U x 4	
	∅3.5 x 14 mm	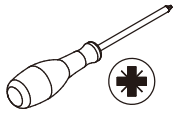

Fix bolt(J) to board 3 with screws (U) as shown.

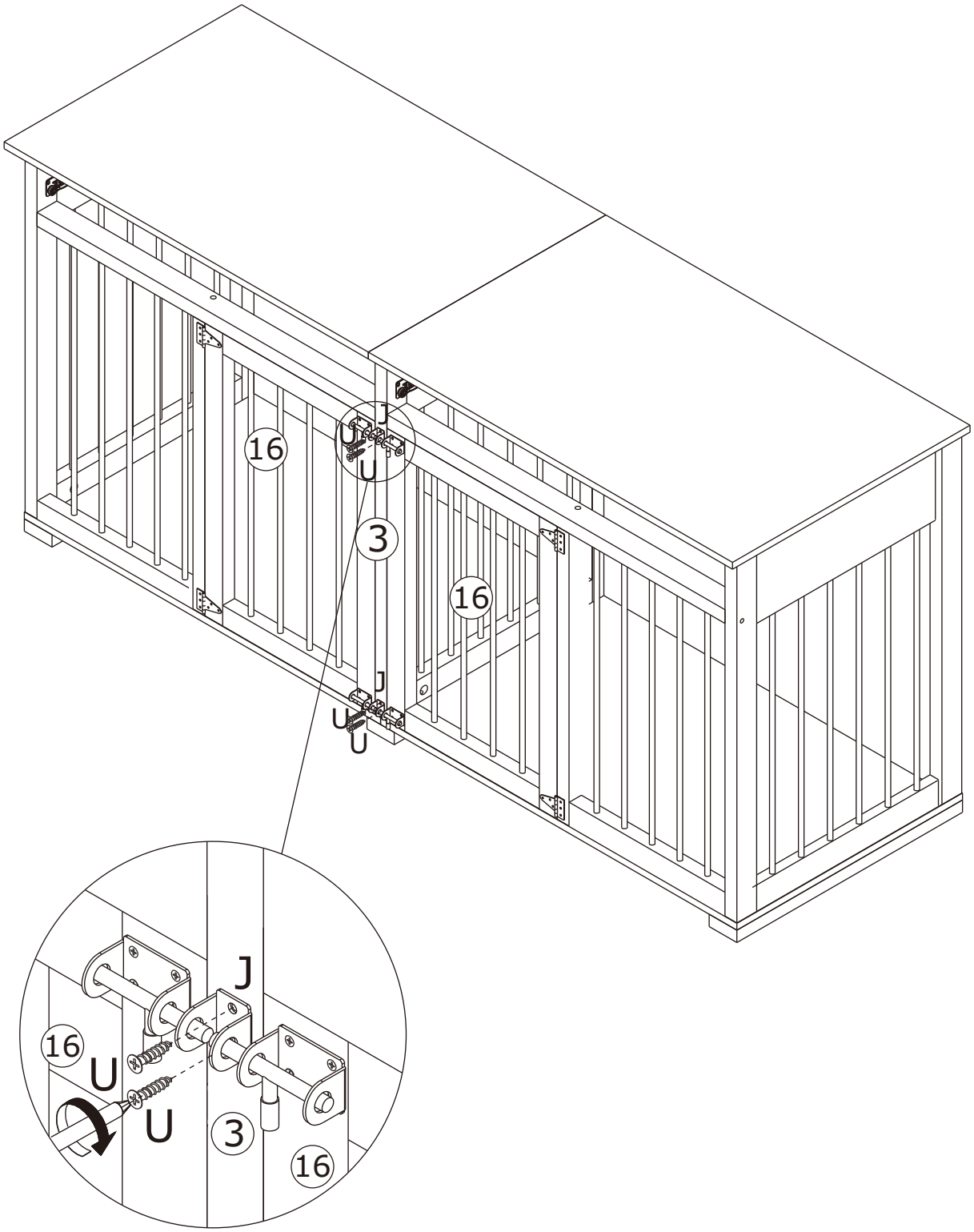

20

Ax4	
∅6 x 35 mm	

Screw eccentric rod(A) into board 18 as shown.

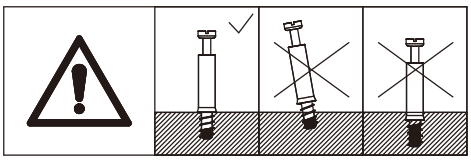

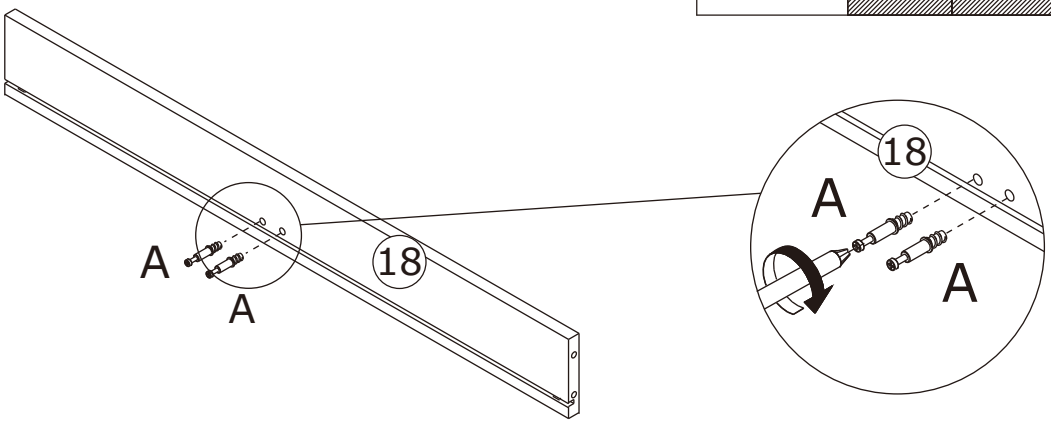

x 2

21

R x 8	S x 4	
∅4 x 30 mm	∅15 x 9.5 mm	

Fix board 18 to board 17 and 19 with screw(R) as shown.

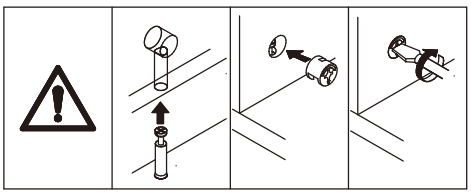

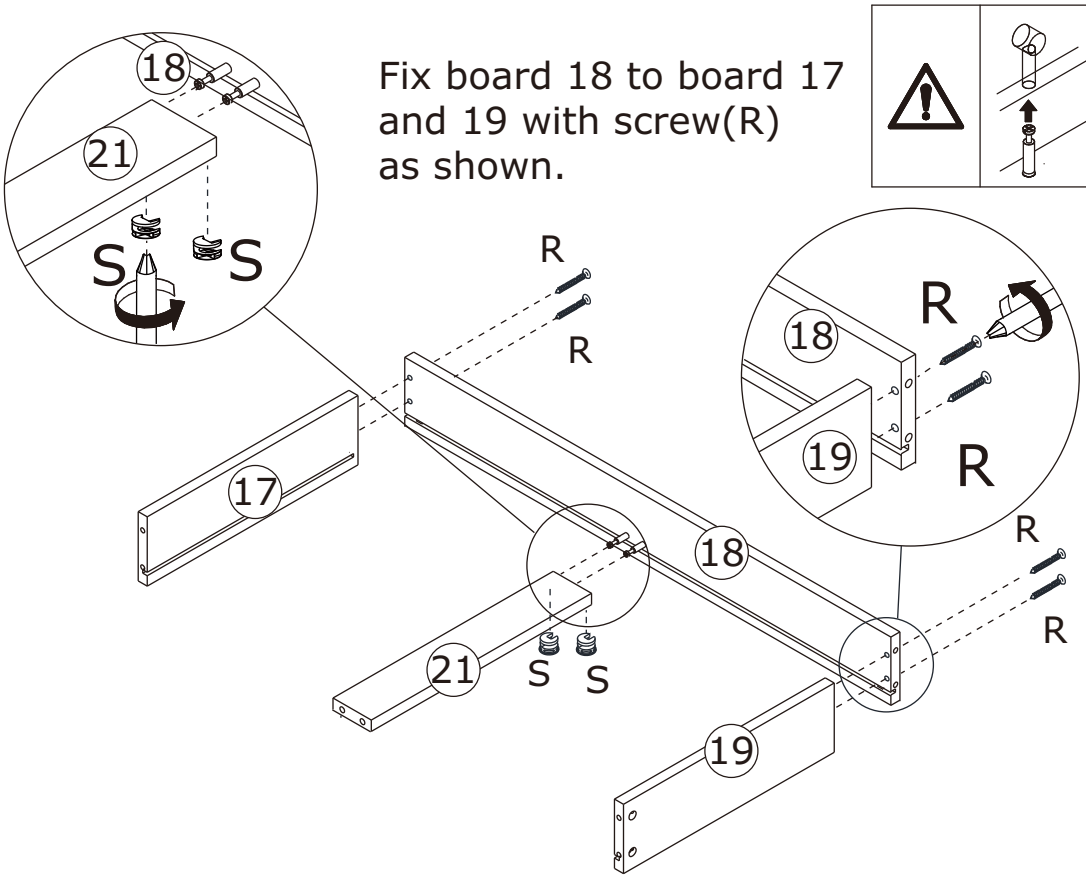

Attach board 21 to board 18, add cam lock(S) into board 21 and turn clockwise to tighten as shown.

x 2

22

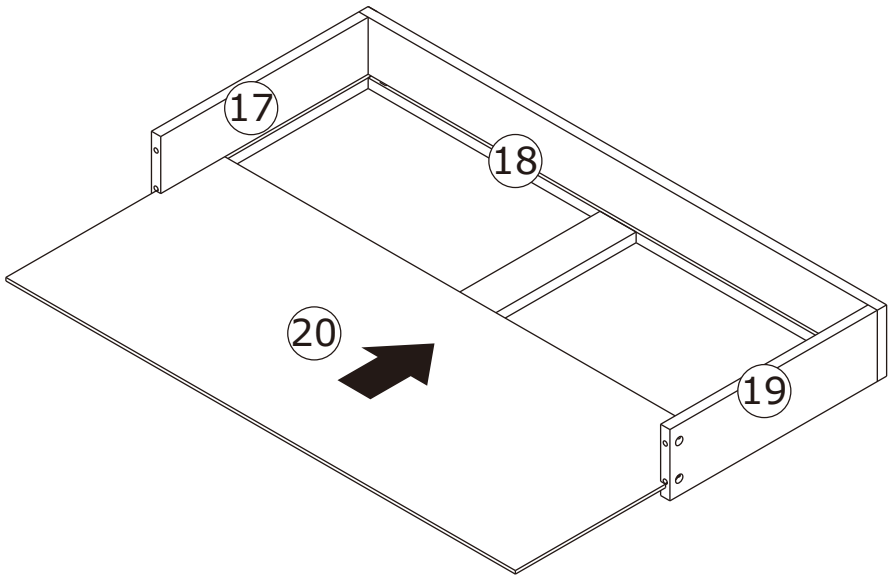

x 2

Insert bottom board 20 along grooves as shown.

23

A x 12	P x 2	
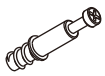 ∅6 x 35 mm	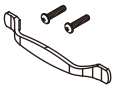 ∅4 x 18 mm	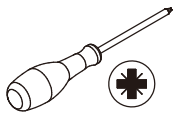

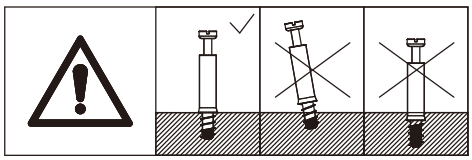

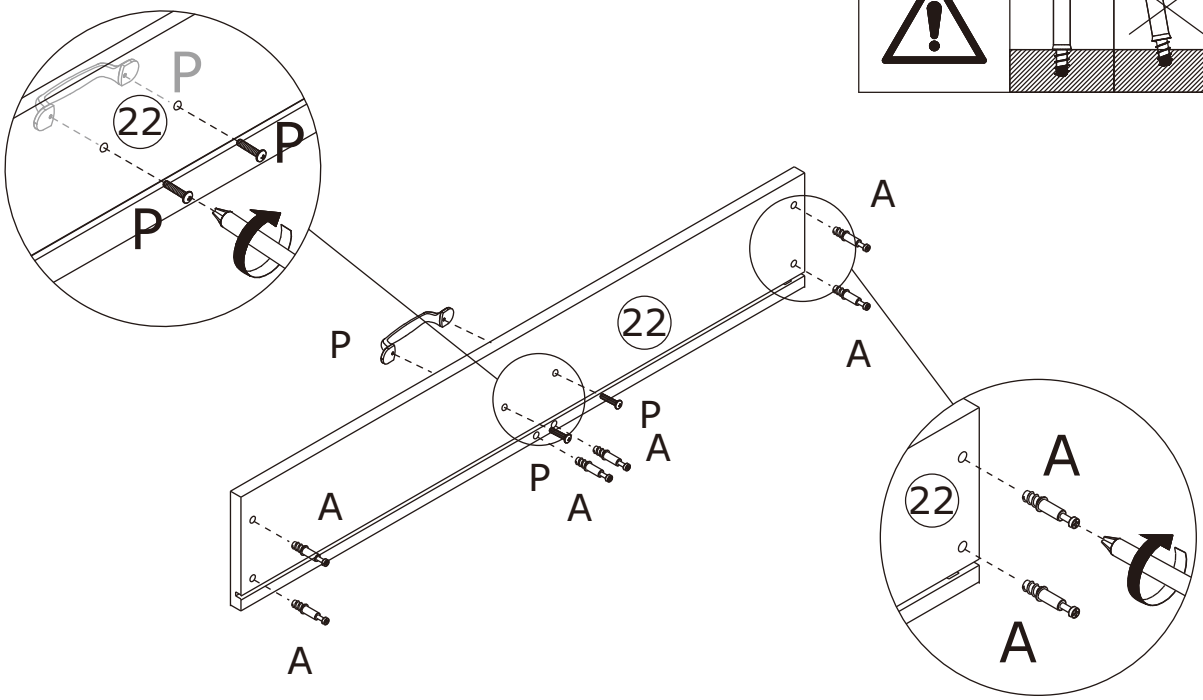

Screw eccentric rod(A) into board 22 as shown.
Fix handle(P) as shown.

x 2

24

B x 8	S x 4	
		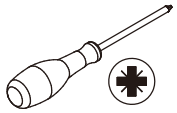
∅15 x 11 mm	∅15 x 9.5 mm	

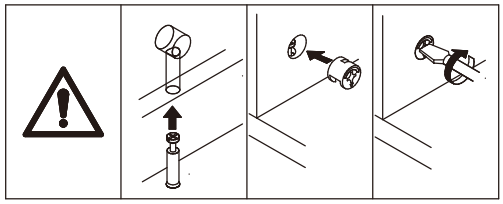

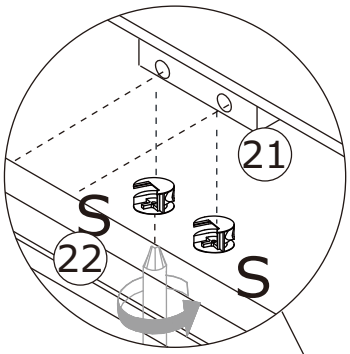

Attach board 22 to board 21, add cam lock(S) into board 21 and turn clockwise to tighten as shown.

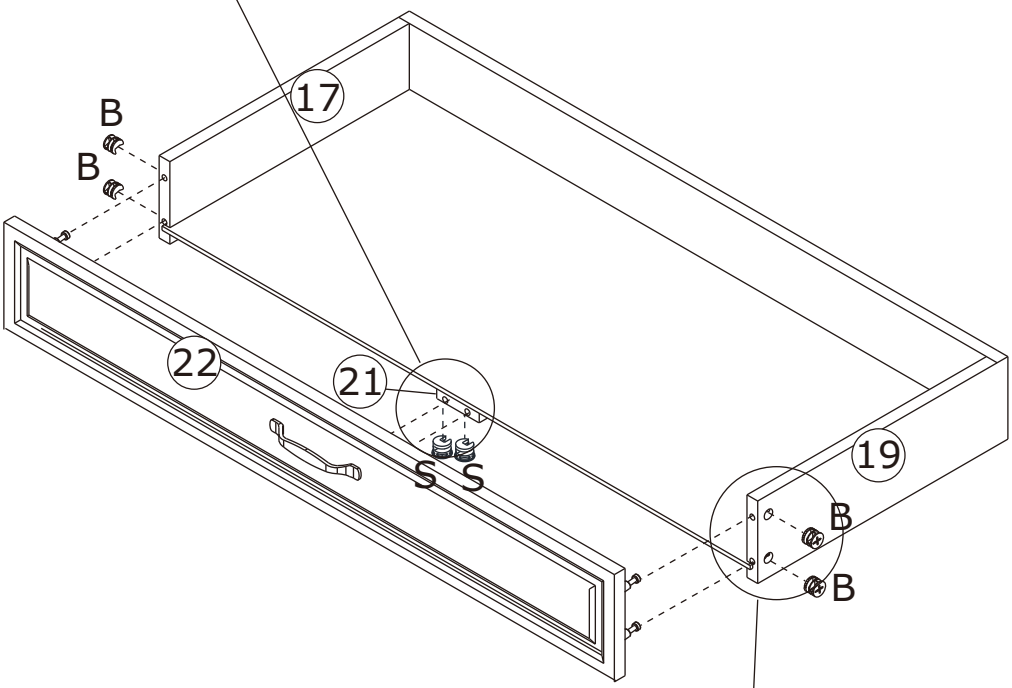

Attach board 22 to board 17 and 19, add cam lock(B) into and turn clockwise to tighten as shown.

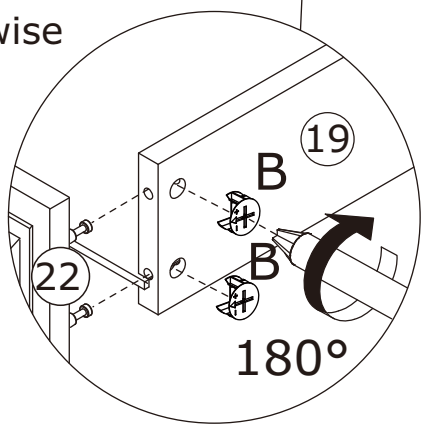

25

D x 2	E x 8	
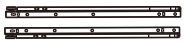 L = 350 mm	∅3 x 12 mm	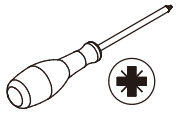

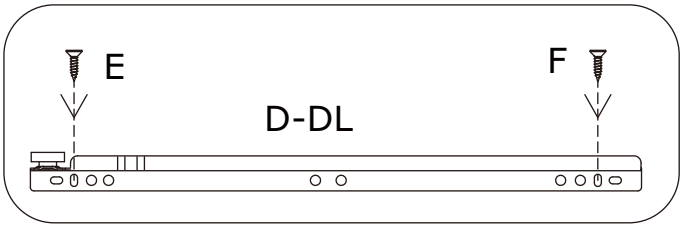

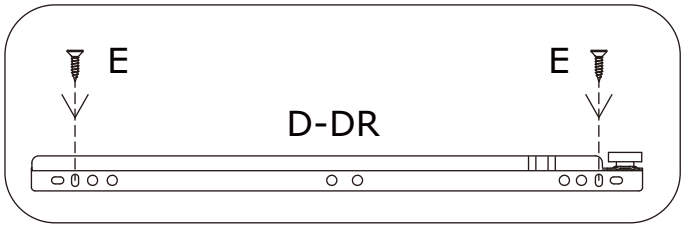

Fix runner(DL) and (DR) to board 19 and 17 with screw(E) as shown.

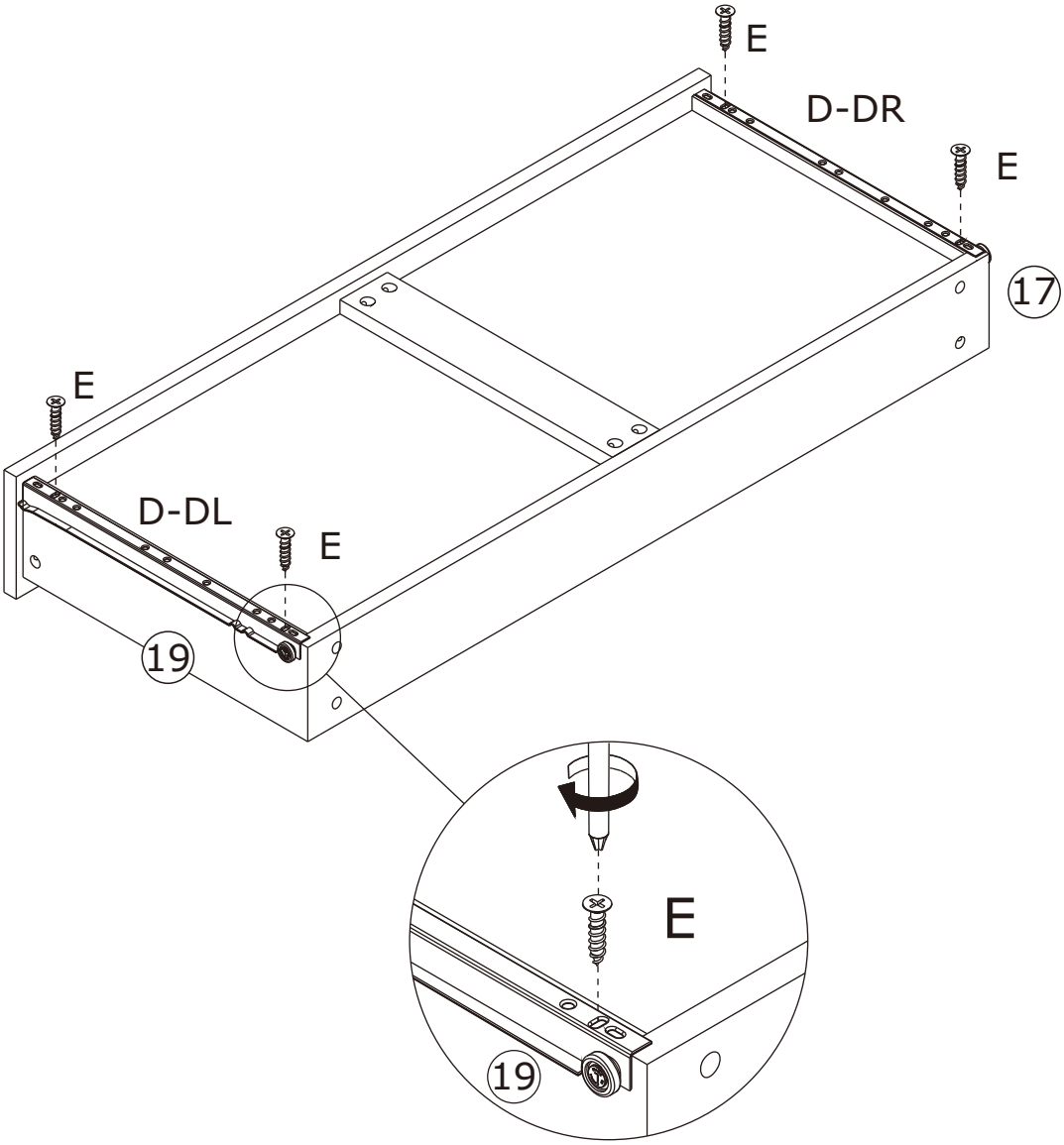

26

Align rails, insert drawers in.

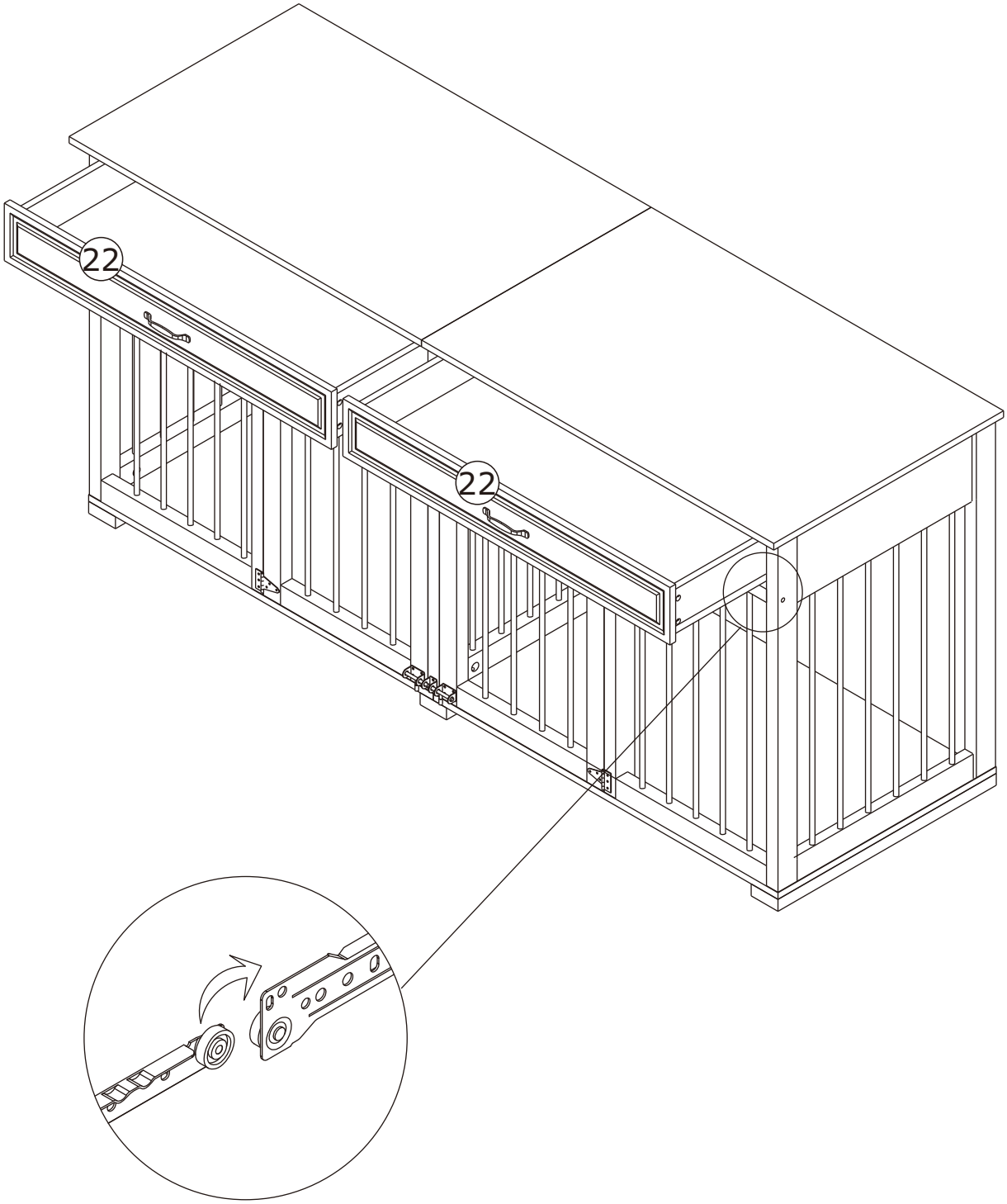

27

Mx6	N x 58	

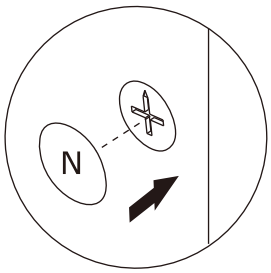

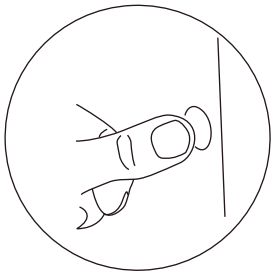

Use sticker(N) to cover cam lock holes as shown.

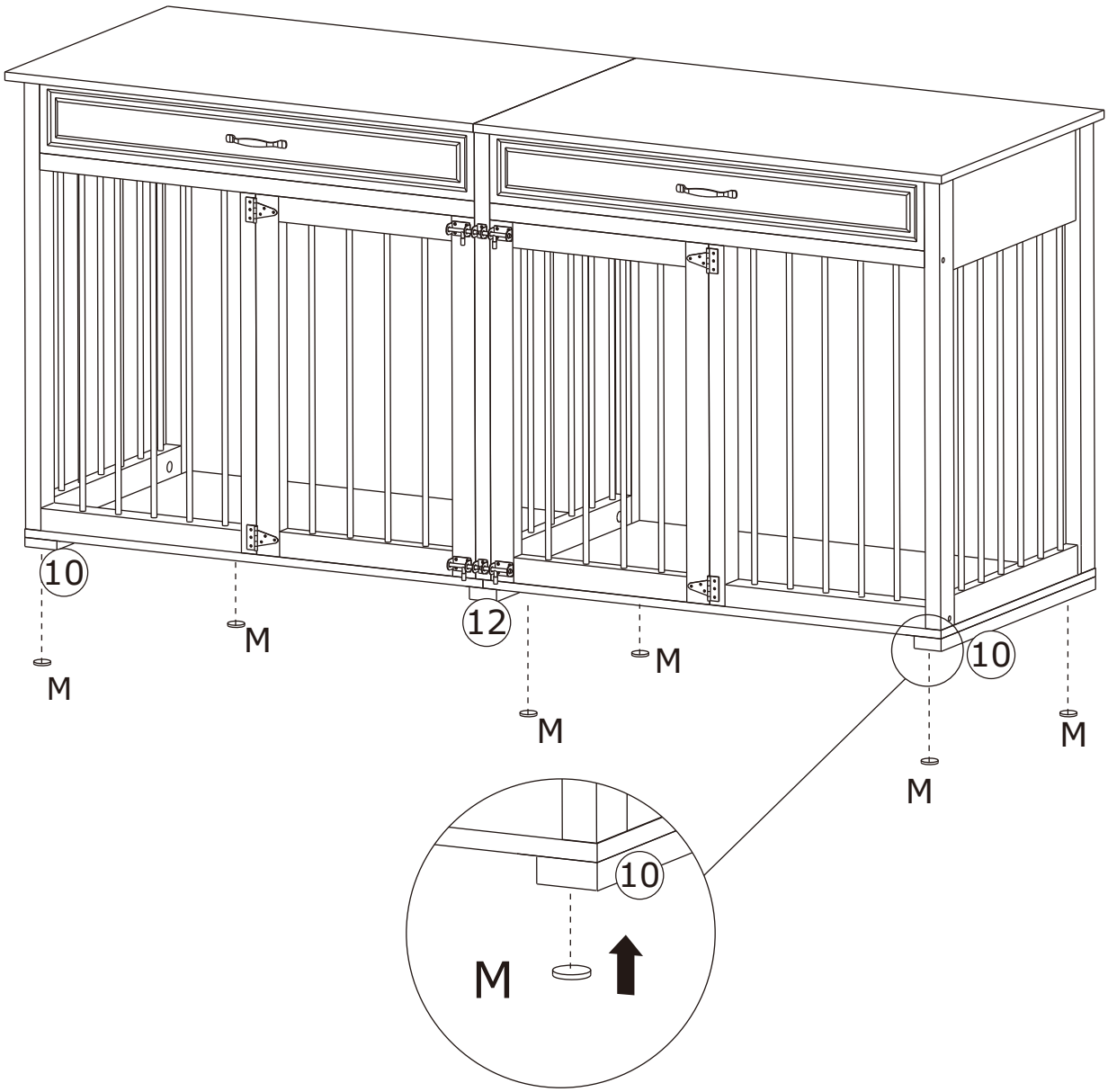

WARRANTY

WARRANTY CLAIMS

•There is a 30-day warranty for broken furniture or any other problems that do not work properly. The warranty will start from the date of purchase which must be verified by proof of purchase.

•Before making a claim, we may be able to answer your query, simply call us. Please leave your purchase order number, along with some details of the problem, if you want a replacement part. We will arrange within 48 hours. If there is out of stock, we will reply with a shipping date.

•The product must be used in accordance with the instructions provided. For health reasons.

•For other reasons, if the furniture needs to be returned, it must be cleaned and dried and operated within 30 days of receipt.

Type of Warranty Claim

•Failure to follow the furniture instructions will invalidate the warranty. Attention please.

•Does not include damage during installation, but includes damage during transportation.

Scope of responsibility

•Shall not bear any responsibility for misuse or user damage and / or loss of parts during the installation of furniture.

•After using, the damage and scratches of the furniture are not covered by the warranty.

The Warranty Relates to All Bought in The Us and Covers The Following Areas

•Sheet parts: 1 month from the date of purchase.

•Electrical parts: 1 month from the date of purchase.

RETURNS

CHANGED YOUR MIND AND NEED TO RETURN YOU ITEM?

PLEASE FOLLOW THE BELOW INSTRUCTIONS:

- If you have purchased and have simply changed your mind, follow the retailer's instructions for returns.

DEFECTIVE ITEMS

- If your item is defective in any way, i.e. it doesn't work but you can't identify why, in the first instance, please call us.

DAMAGED ITEMS

- If you receive an order with obvious shipping damage from the retailer, then we suggest the delivery is refused. If the delivery has been accepted and then shipping damage is found, please follow the specific instructions advised by the retailer.
  In all circumstances please save all packaging material and paperwork for the order. Please be aware that if you dispose of packaging material or attempt to return the merchandise without contacting the fulfiller, you jeopardise your chances of making a claim, and you may not receive a credit for the return.