BED
ASSEMBLY INSTRUCTIONS

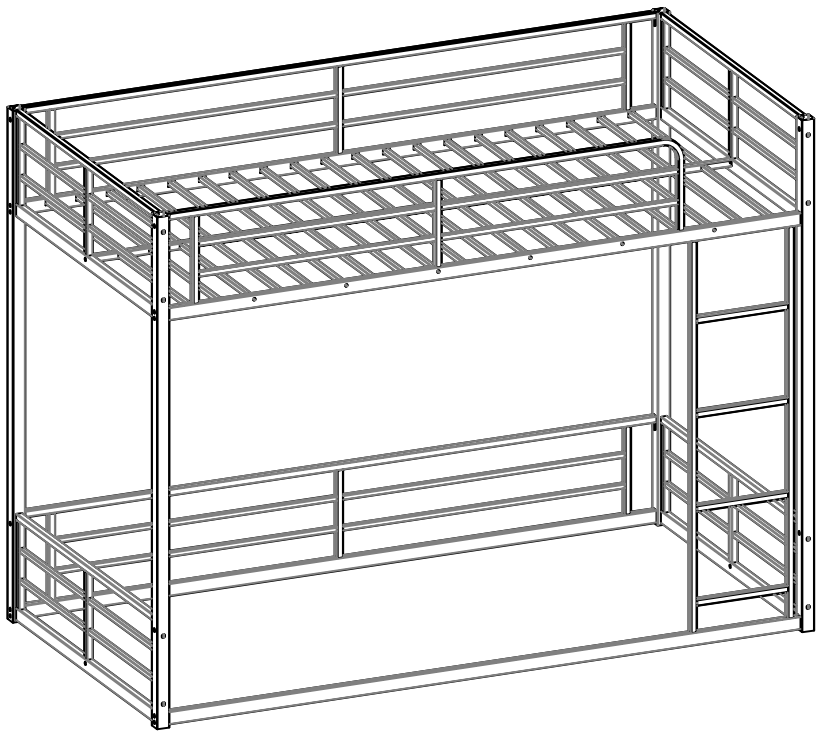

Attention

Please use the screws correctly according to the instructions. Thank you.

SAFETY WARNINGS AND GENERAL NOTES:

1. Follow the information on the warnings on the bunk bed end structure and on the carton. Do not remove the warning label from the bed.
2. Always use the recommended size mattress on mattress support, or both, to help prevent the likelihood of entrapment or falls.
3. Do not allow children under 6 years of age to use the upper bunk.
4. Periodically check and ensure the guardrail, ladder and other components are in their proper position, free from damage, and all connectors are tight.
5. Do not allow horseplay on or under beds.
6. Always prohibit jumping on the bed.
7. Prohibit more than one person on upper bunk.
8. Always use the ladder for entering and leaving the upper bunk.
9. Do not use substitute parts. Contact the manufacturer or dealer for replacement parts.
10. Use of a night-tight may provide added safety precaution for a child using the upper bunk.
11. Always use guardrails on both long sides of the upper bunk.
12. If the bunk bed will be placed next to a wall, the guardrail that runs the full length of the bed should be placed against the wall to prevent entrapment between the bed and the wall.
The use of water or sleep flotation mattresses is prohibited.
13. **STRANGULATION HAZARD**-Never attach or hang items to any part of the bunk bed that are not designed for use with the bed; for example, but not limited to, hooks, belts and jump ropes.
14. Keep these instructions for future reference.
15. We recommend assembling your bunk bed on the shipping carton to protect your floor or carpet.
16. Be certain all staples are out of the box before beginning assembly on the shipping carton.
17. USE ONLY MATTRESSES WHICH ARE AS THE TABLE BELOW ON UPPER AND ON LOWER BUNKS.

Down bed

Mattress type	Length	Width	Thickness
TWIN XL Standard	79”-80”	38-39"	8”

Up bed (bunk bed and tribed included)

Mattress size	Length	Width	Thickness
TWIN XL Standard	79"-60"	38"-39"	6"max

18. SURFACE OF MATTRESS MUST BE AT LEAST 5"(127MM) BELOW THE UPPER EDGE OF GUARDRAILS.
19. Replacement Parts:
Replacement Parts, including additional guardrails, may be obtained from any of our dealers.

Bed parts view

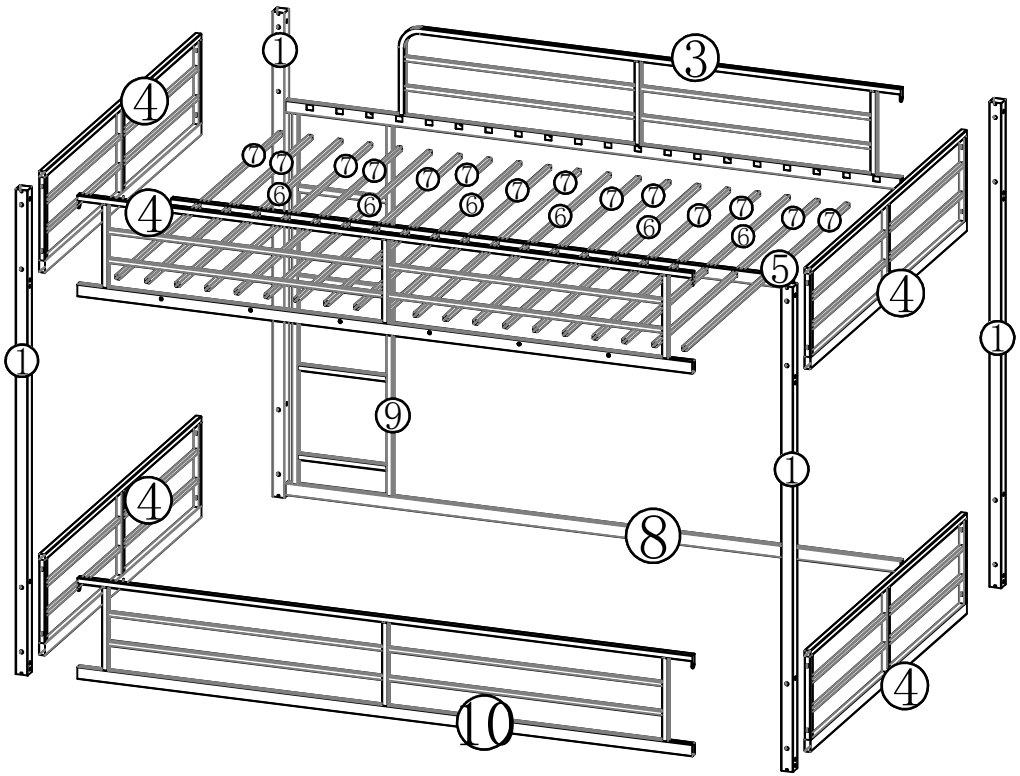

Part List

 1-4pcs	 2-1pcs
 3-1pcs	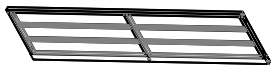 4-4pcs
 5-1pcs	6-6pcs 7-14pcs
8-1pcs	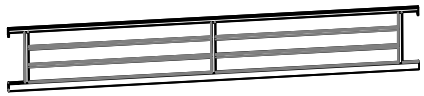 10-1pcs
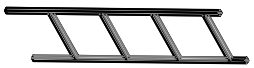 9-1pcs	

Part List

 C 8*35-7PCS	 D 8*55-36PCS	 E 6*30-12PCS	 K 40PCS	 F 8*15-21PCS
	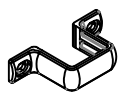 U 2PCS	 T 4PCS	L=5MM L=4MM	

Step 1:

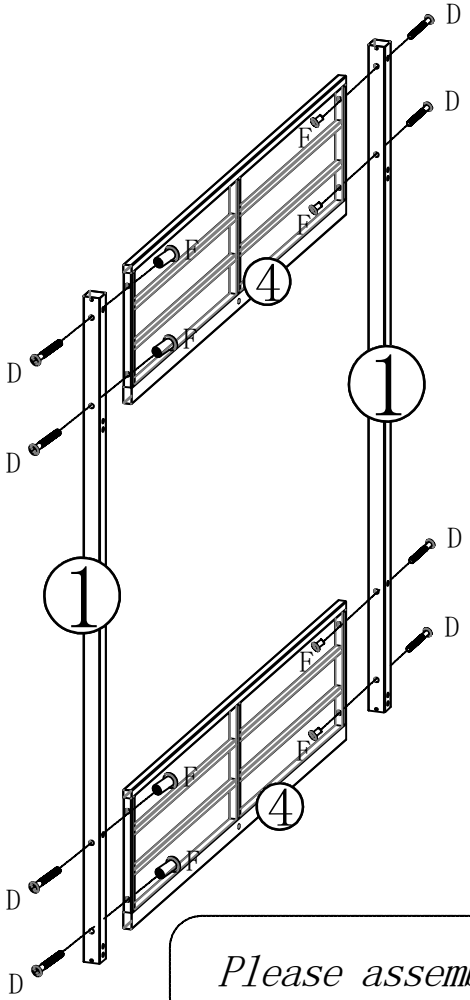

Please assemble **2** *sets*



D

8*55

16PCS



F

8*15-16PCS



L

Step 2:

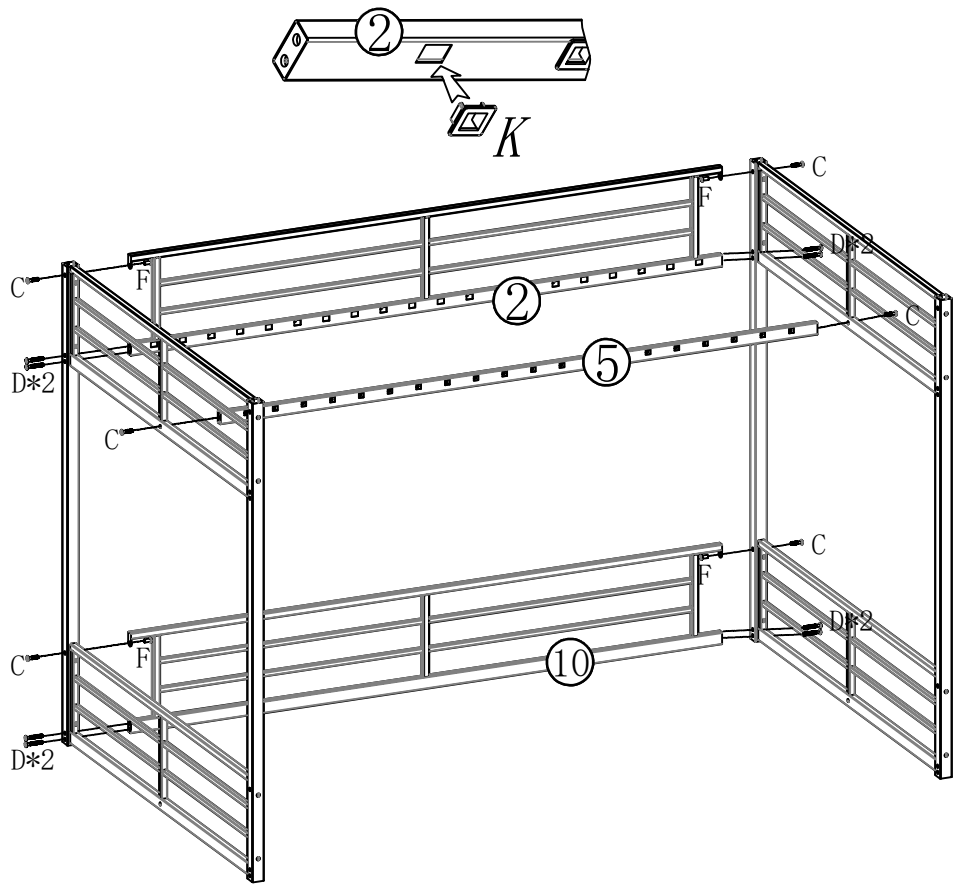



K

20PCS



D

8*55

8PCS



F

8*15-4PCS



C

8*35-6PCS



L

Step 3:

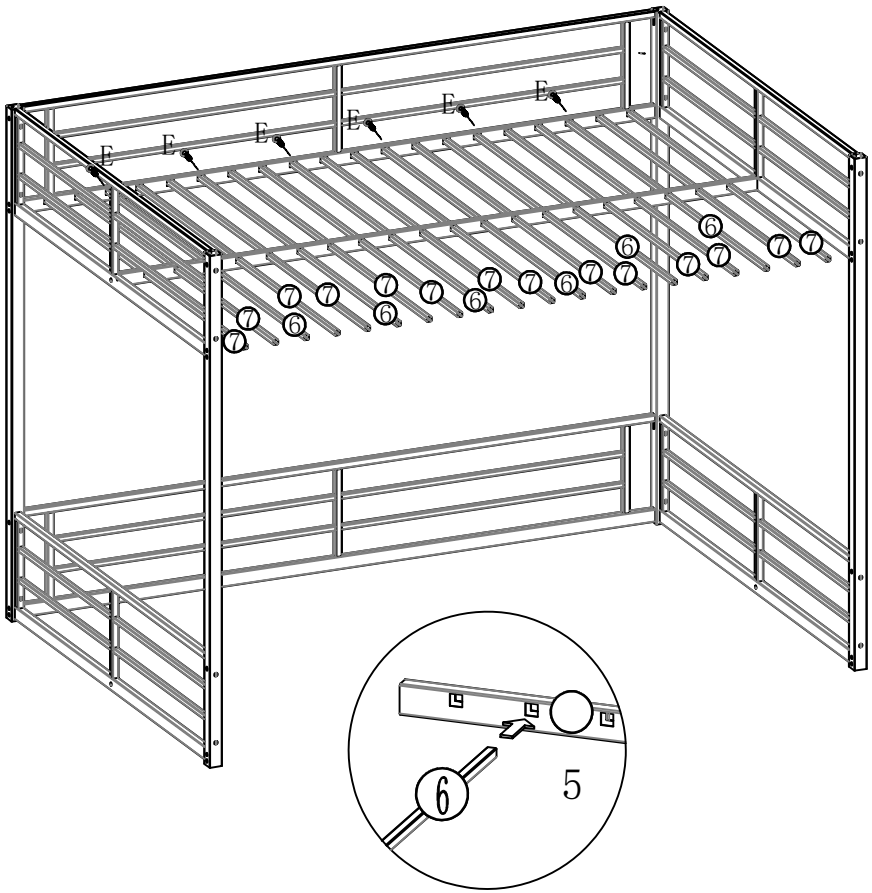



E
6*25-6PCS



L

Step 4:

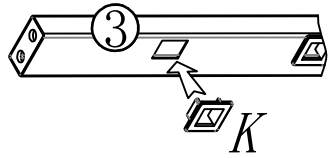

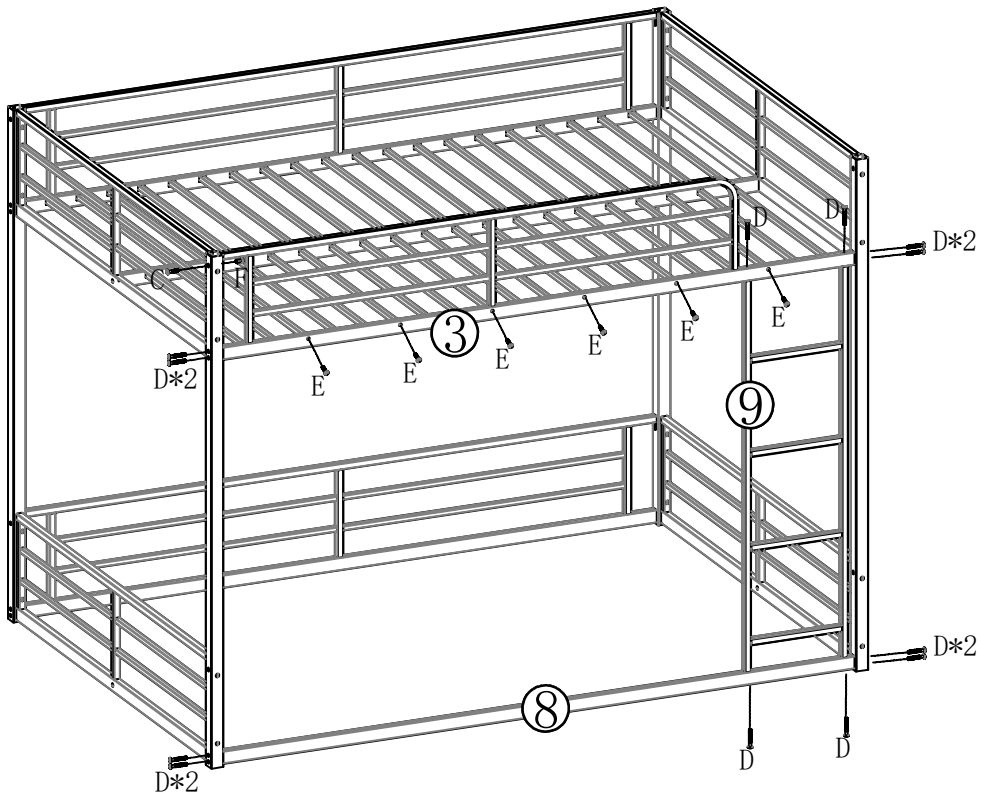



K
20PCS



E
6*25-6PCS



D
8*55
12PCS



F
8*15-1PCS



C
8*35-1PCS



L

Completed

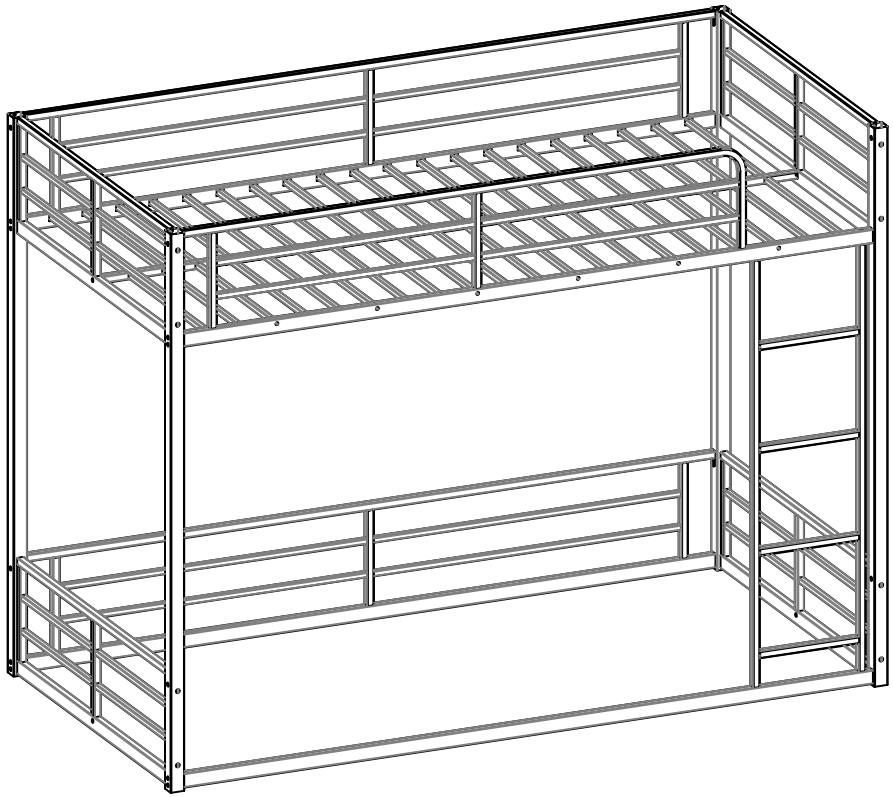

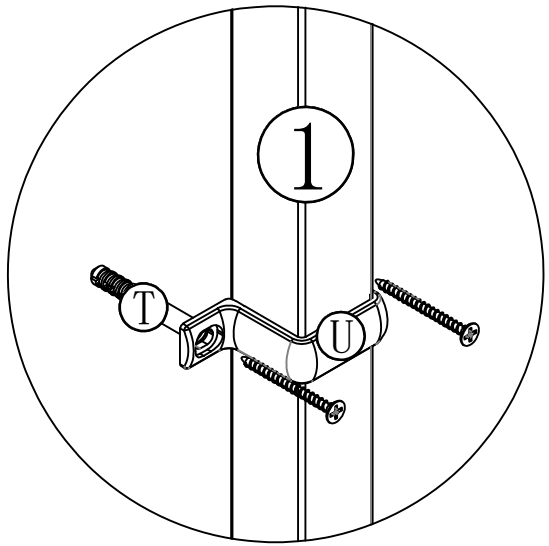

Tips:
If you feel that the bed is a little wobbly then please use the parts "U" and "T"for reinforcement

Attention *Please tighten all screws before use, thank you.*