Installation & Assembly

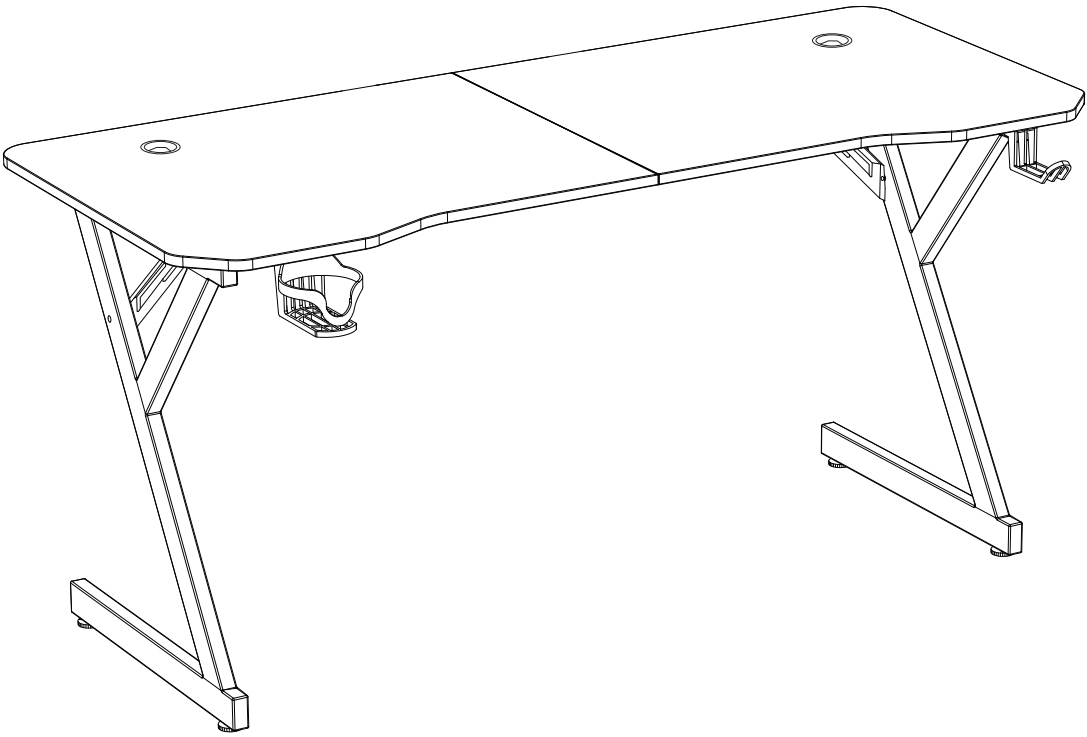

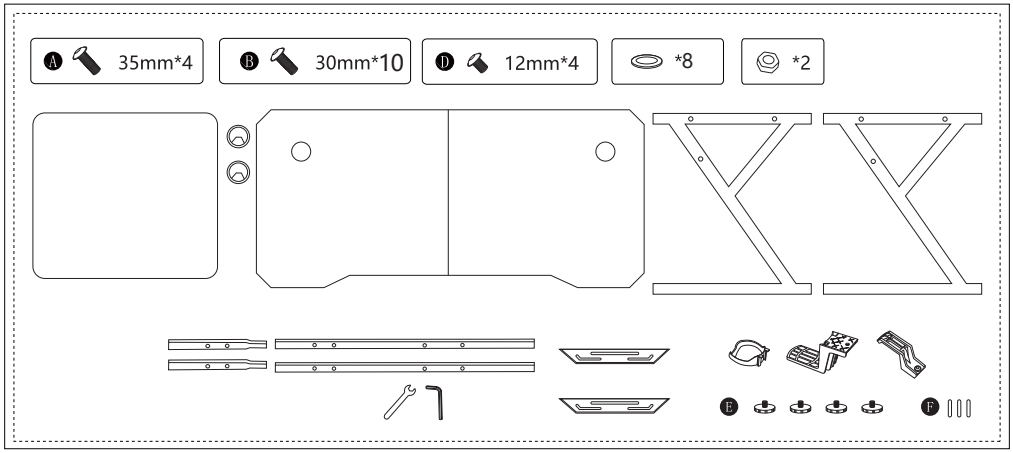

1

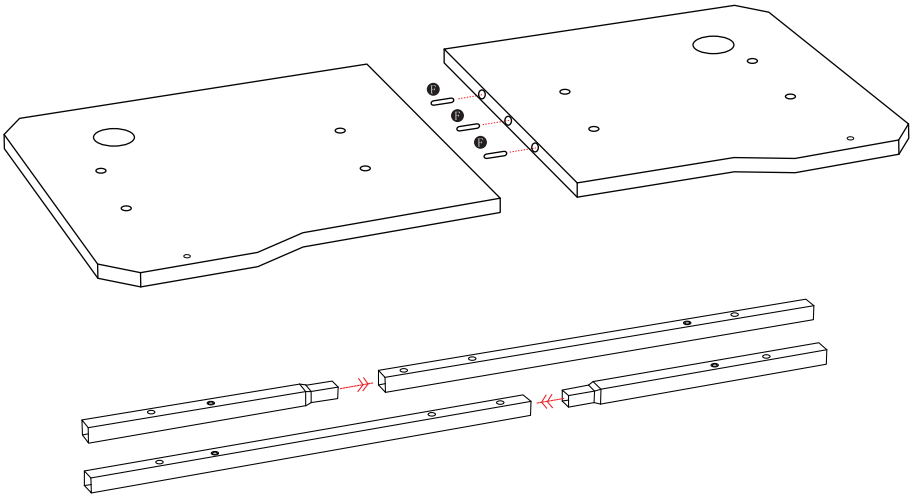

2

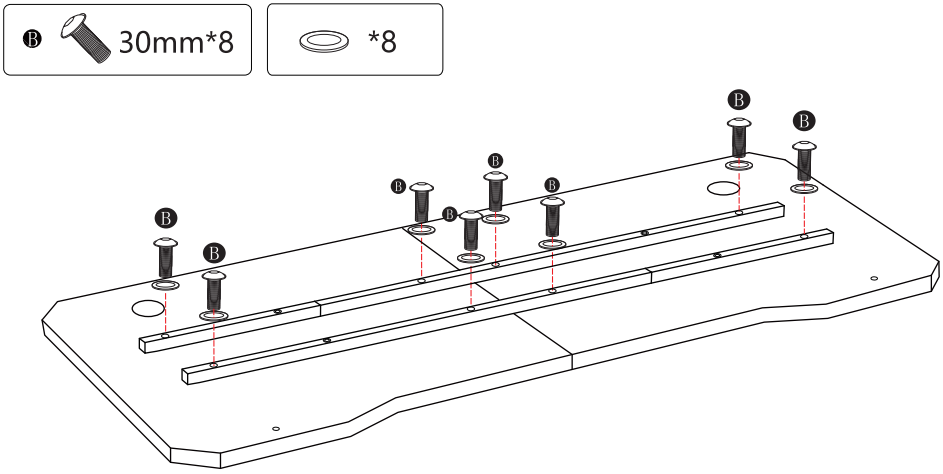

Ⓐ 35mm*4

3

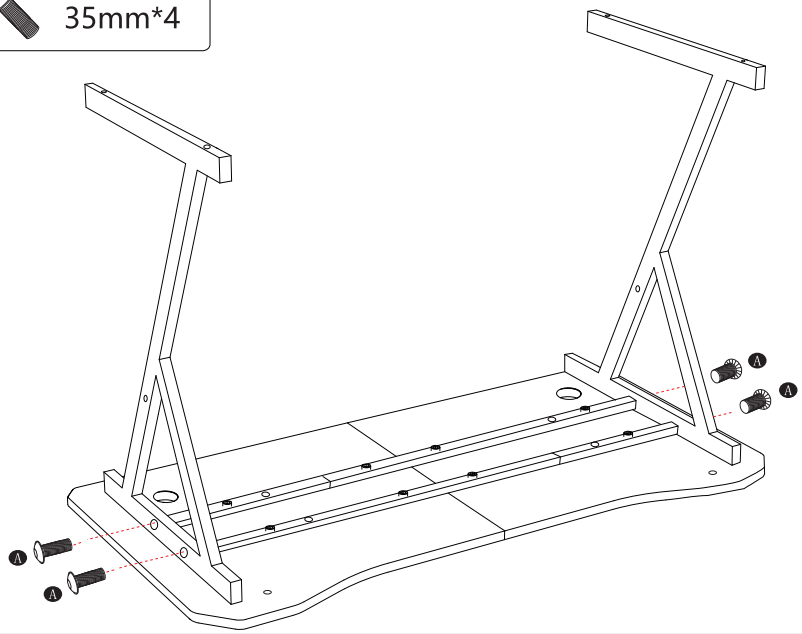

Ⓑ 30mm*2 | Ⓓ 12mm*4 | *2 | Ⓔ *4

4

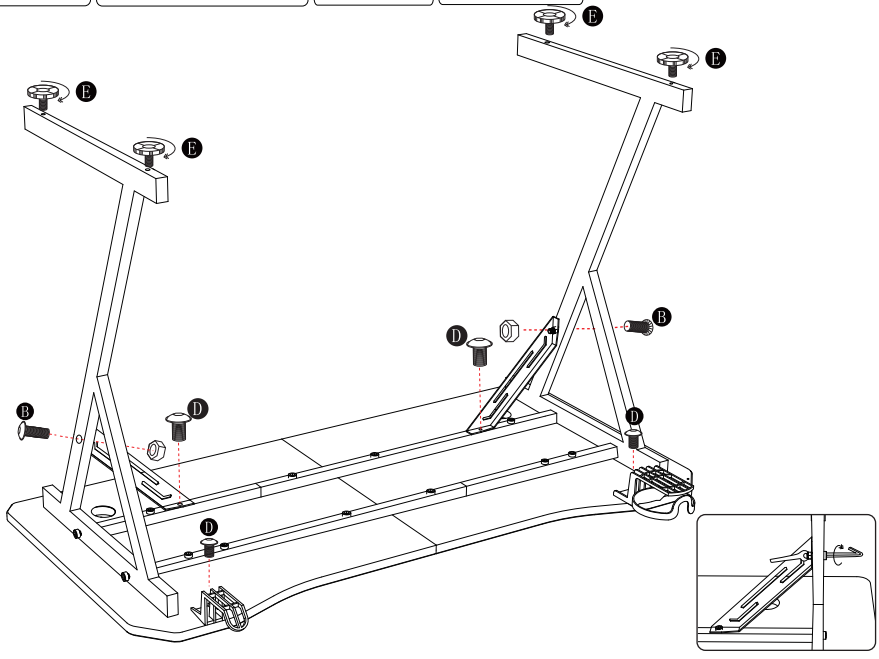

*2

5

