CHANDELIER FIXTURE
INSTALLATION INSTRUCTIONS

Please read carefully and save these instructions,as you may need them a later date.

CAUTION

Turn off the main power at the circuit breaker before installing the fixture,in order to prevent possible shock.

GENERAL

All electrical connections must be in accordance with local and National Electrical Code(N.E.C) standards.If you are unfamiliar with proper electrical wiring connections obtain the services of a qualified electrician.
Remove the fixture and the mounting package from the box and make sure that no parts are missing by referencing the illustrations on the installation instructions.

ASSEMBLY AND INSTALLATION

1, Screw the LOOP to the fixtures.
2, Attach the Cross Bar to the Outlet Box by using 2pcs Mounting Screws upwards. Screw the NIPPLE with the WASHER and HEX NUT-1 to the CROSS BAR.
Make wire connections:
--Smooth wire (w/marking) from the light to black wire from power source.
--Ribbed wire (w/o marking) from the light to white wire from power source
--Attach the ground wire to the cross bar with a green ground screw. Carefully tuck wire back into the OUTLET BOX
3, Screw the TOP LOOP to the NIPPLE,Place the CANOPY against the OUTLET BOX, and secure it with the TOP NUT.
4, Attach the SHADE to the fixture, screw with the RING.
5, Install bulbs.(Please do not exceed the maximum capacity which is recommended on the sockets).
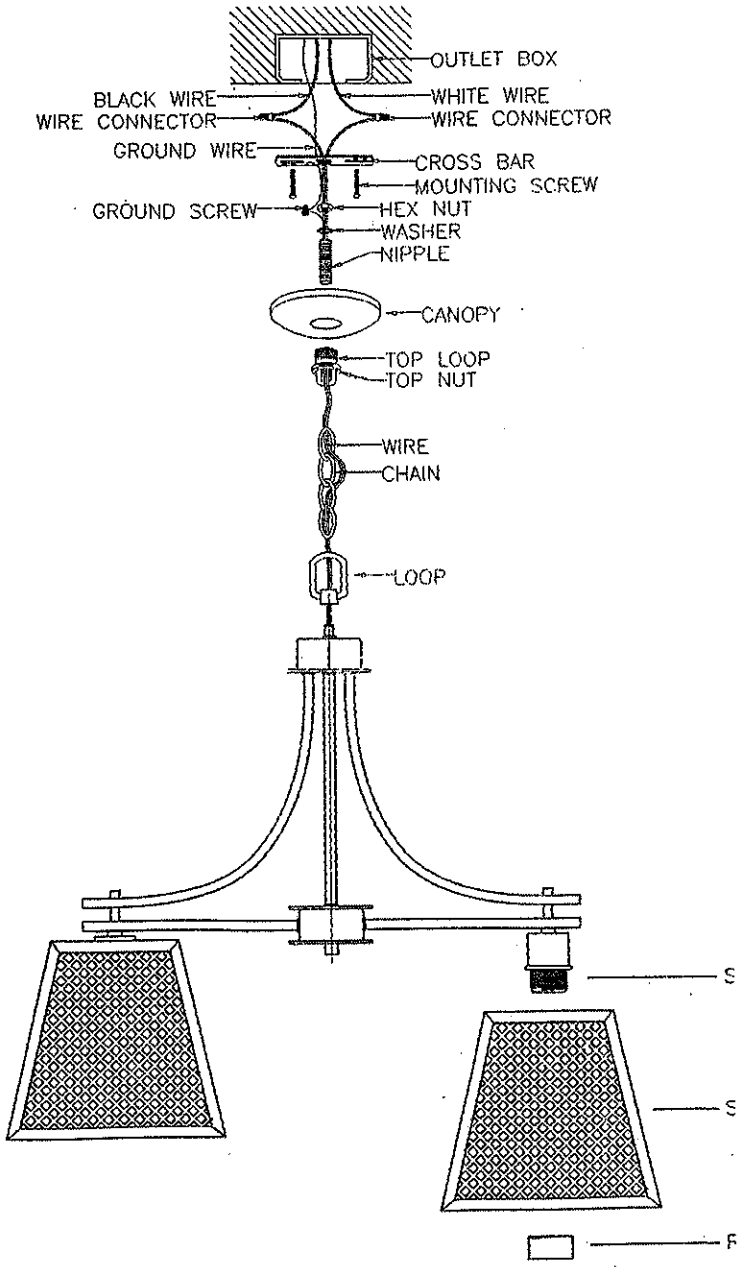
INSTALLATION IS NOW COMPLETED.