ASSEMBLY INSTRUCTIONS

01/20
EU2222
V3

Warning –
CHOKING HAZARD – Small Parts Not for children under 3 years. Adult assembly required.

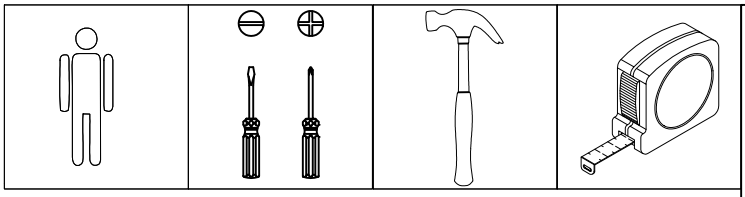

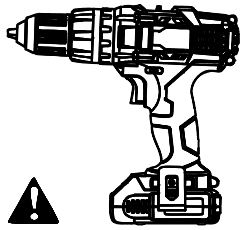

Although not required, it is recommended that a drill be used to help ease the assembly process, as some holes are not pre–drilled.

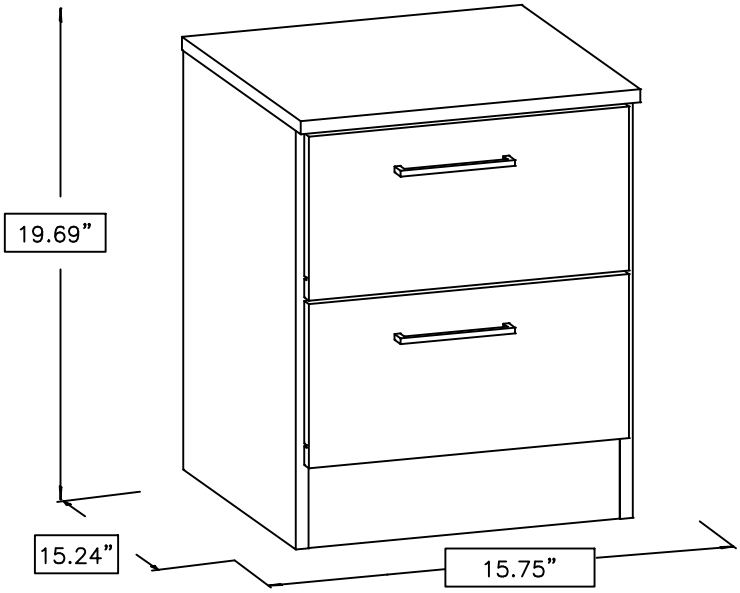

Part Identification

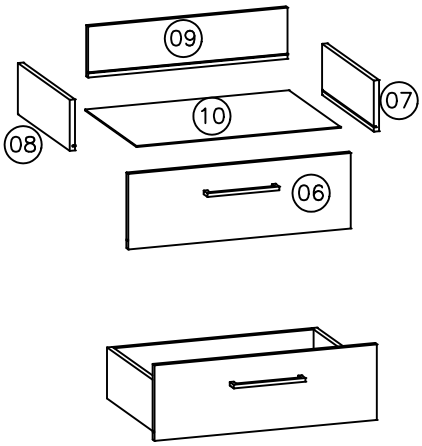

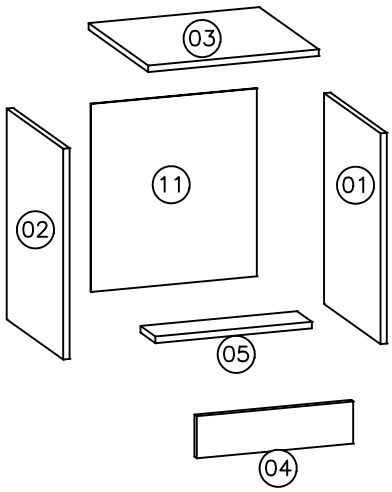

CS@K1intlgrp.com or Toll–free 1–877–250–2820

List of pieces

Code	Description	Descrição (Internal production data)	Amount	Length (in.)	Width (in.)	Thickness (in.)	Box
01	Right side panel	Lateral direita	2	18.94”	14.33”	.59”	A
02	Left side panel	Lateral esquerda	2	18.94”	14.33”	.59”	A
03	Top	Tampo	2	15.75”	15.12”	.59”	A
04	Front skirting	Rodapé frontal	2	14.45”	3.78”	.59”	A
05	Crosspiece	Travessa	2	14.45”	3.78”	.59”	A
06	Drawer front	Frente de gaveta	4	14.84”	7.40”	.59”	A
07	Right Side of Drawer	Lateral de gaveta direita	4	13.78”	4.72”	.59”	A
08	Left Side of Drawer	Lateral de gaveta esquerda	4	13.78”	4.72”	.59”	A
09	Back of Drawer	Cabeceira de gaveta	4	12.28”	4.72”	.59”	A
10	Base of Drawer	Fundo de gaveta	4	12.80”	13.70”	.12”	A
11	Back Panel	Costa	2	16.93”	15.35”	.12”	A

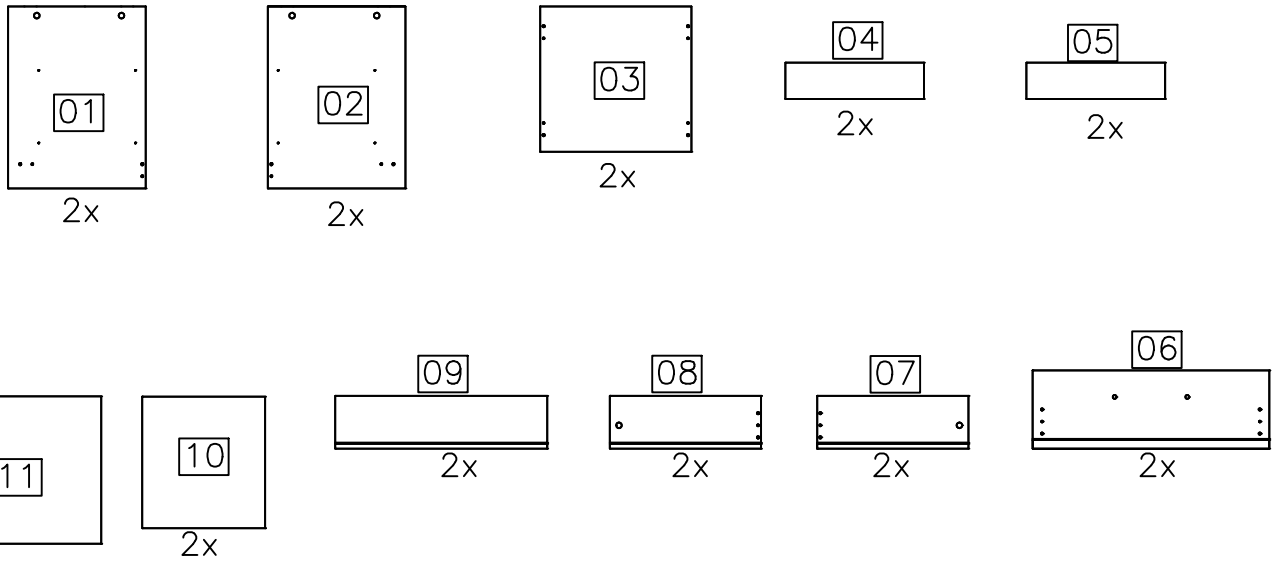

We Recommend you use the Box that your furniture came in as the base for your work space. This can help prevent and unnecessary damages from occurring.

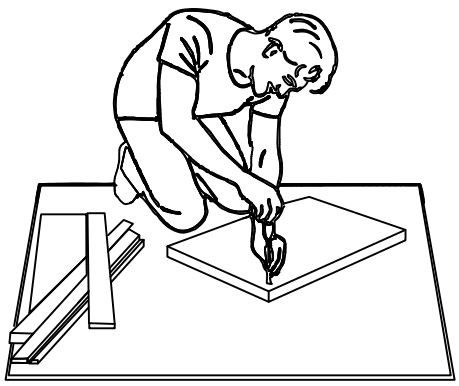

Hardware

	Code	Description	Amou.
PM	30945	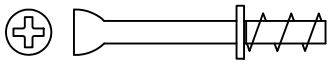 Cam Screws	16
TM	30950	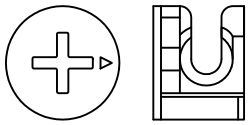 Cam Locks	16
PE18	75515	 Screw 5x40	16
PC4	54117	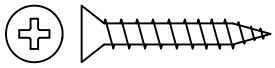 Screw 3,5x25	8
PC5	5256	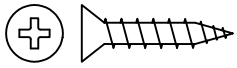 Screw 4x20	8
C1	1802	 Dowel 6x30mm	48
PC3	4204	 Screw 3,5x14	32
PR1	107	Nail 10x10	32
PR2	108	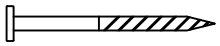 Nail 12x12	8

Anti–tipping installation

Warning: For Measures of Safety, it is recommeded that this item be fixed to the wall, to avoid overturning, if this happens it can cause serious or fatal injuries.

ATENCION: Por medidias de seguridad se recomienda fijar el mueble a la pared para enitar Volcaminento del mismo, si esto llegase a ocurrir puede causar lesiones graves o fatales.

SF	55606	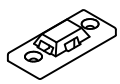 Mounting bracket	4
ANY	55607	 Clamp	2
PC10	51980	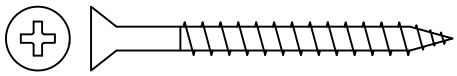 Screw 4,5x50	4
PF4	1178	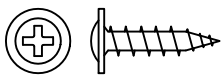 Screw 3,5x16 BC	4
BG	32069	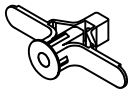 Adapter sleeve	4

CM1	169	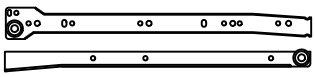 350mm metal slide set	4
CM1A		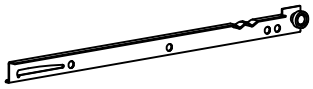 Right Drawer slide	
CM1B		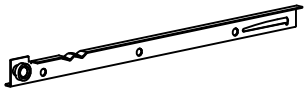 Left drawer slide	
CM1C		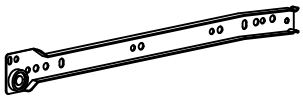 Metallic slide for left sided panel	
CM1D		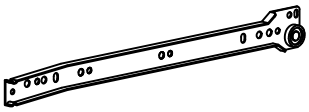 Metallic slide for right sided panel	
SD	1901	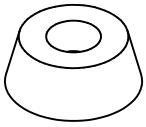 Shoe black	8
PX	BR/CZS/PRF=62133 CZS2=85589	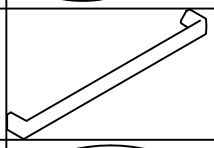 Handle	4
TP1	BR=45292 PRF=43220 CZS=81300	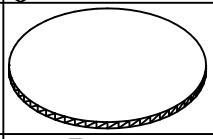 Screw cap cover 19mm	8
TP2	BR=8010 PRF=55546 CZS=81299	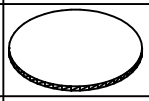 Screw cap cover 13mm	8
CZ3	58788	 Allen key	1
S5	18458	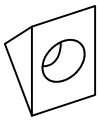 Black triangular support	8

Helpful Tips

INSTALLING CAM

Identify arrow on head of cam. Arrow MUST point toward hole in edge of panel. Push cam all the way down into hole.

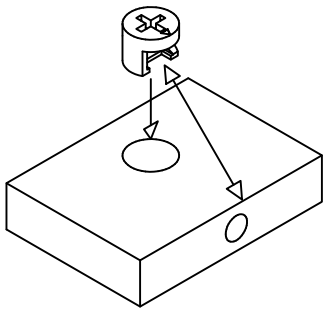

CAM AND DOWEL ALIGNMENT

Ensure the arrow on the cam points toward hole and insert cam dowel into hole. Make sure pieces join together.

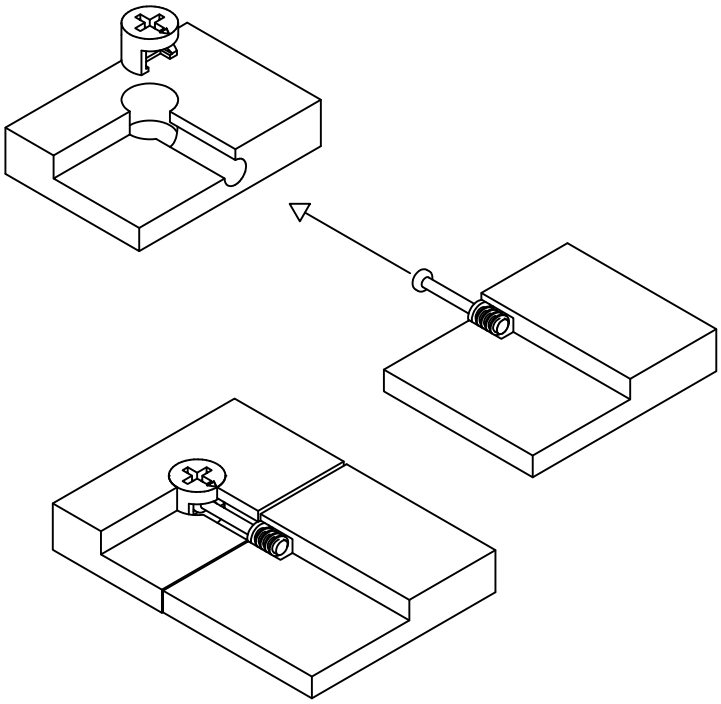

TIGHTENING CAM

Use screwdriver to turn cam. Turn cam (clockwise) until fully tightened. Slightly more than half a turn.

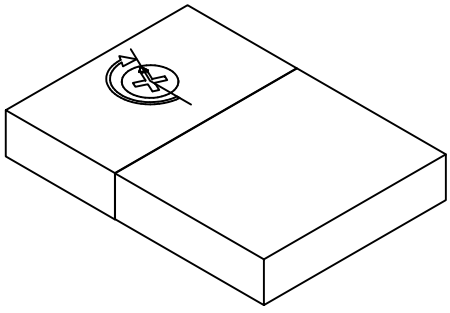

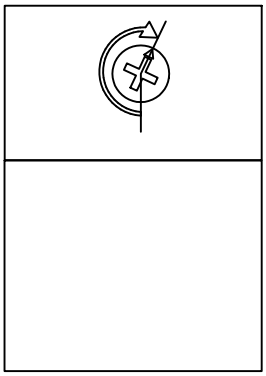

1A Drawer Preassembly

This process is repeated four times (x4)

C1	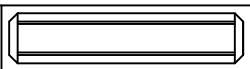	32

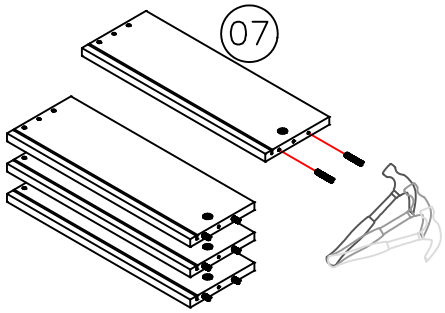

1B

This process is repeated four times (x4)

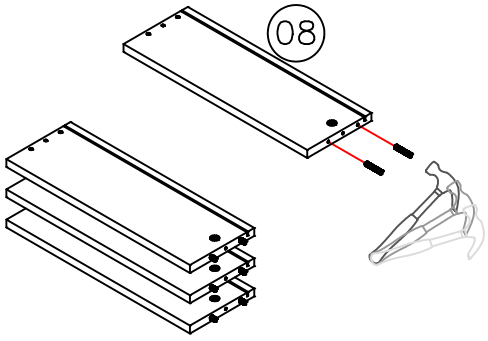

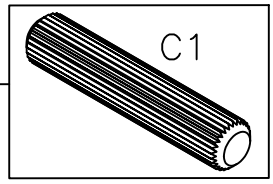

1C

This process is repeated four times (x4)

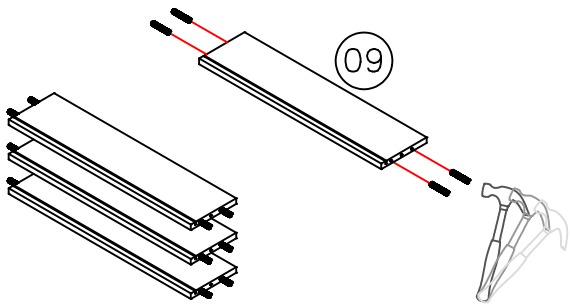

1D Drawer Preassembly

This process is repeated four times (x4)

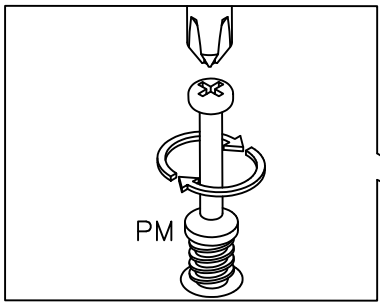

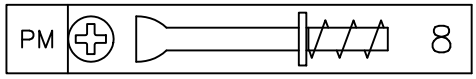

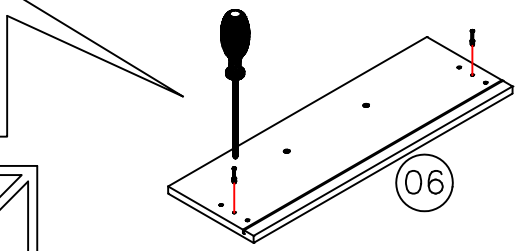

x4

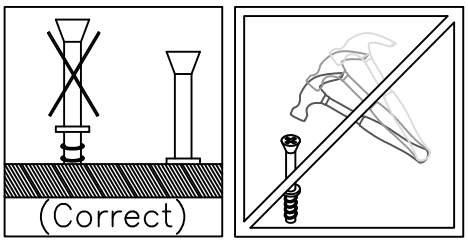

02 Drawers Mounting

This process is repeated four times (x4)

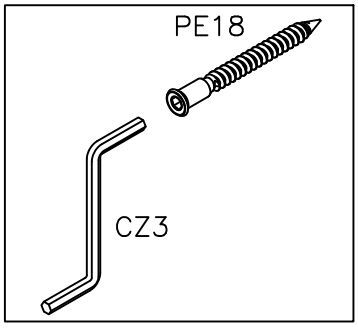

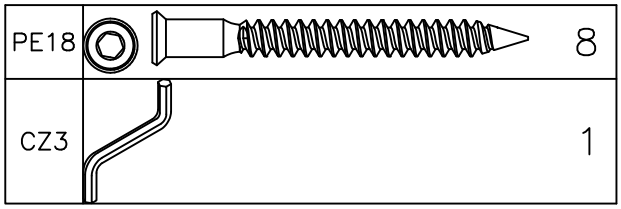

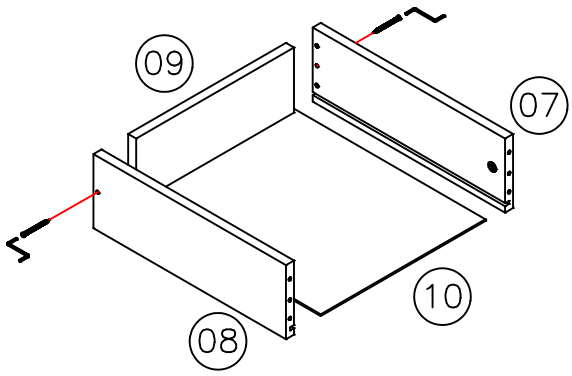

x4

03

Drawers Mounting

This process is repeated four times (x4)

TM	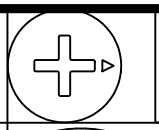	8
TP1	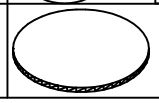	8

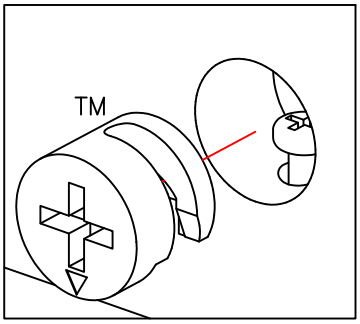

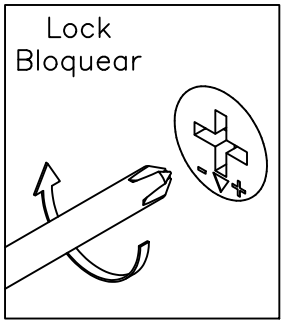

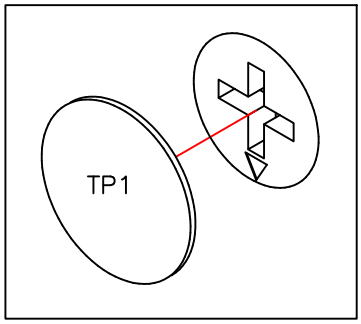

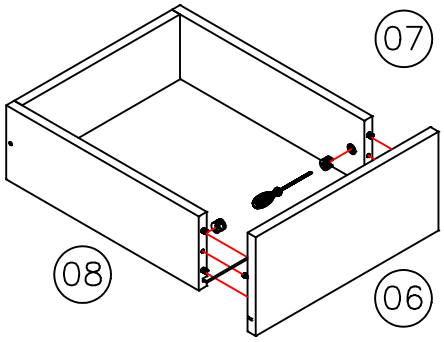

x4

04

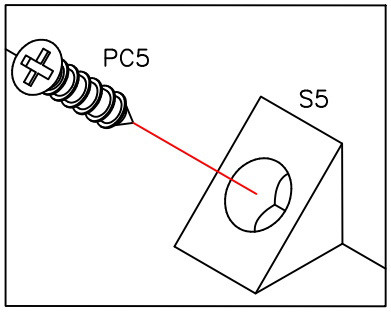

PC5	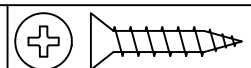	8
S5	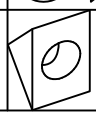	8

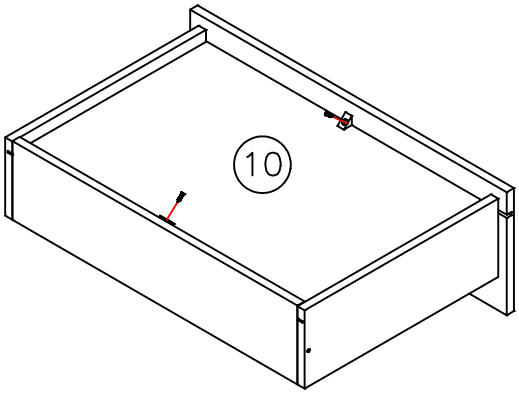

x4

05 Drawers Mounting

This process is repeated four times (x4)

CM1A	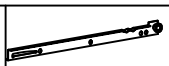	4
CM1B		4
PC3		16

This QR code will take you to a YouTube video that will demonstrate how to properly install the Glide rail
You can also search YouTube for "K1 GLIDE RAIL

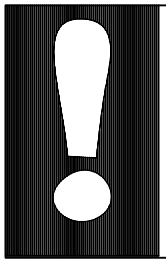

Please ensure that these screws are complete screwed in. As failure to do so could cause issues when installing the drawer.



Wheels should Always be towards the back of the Drawers

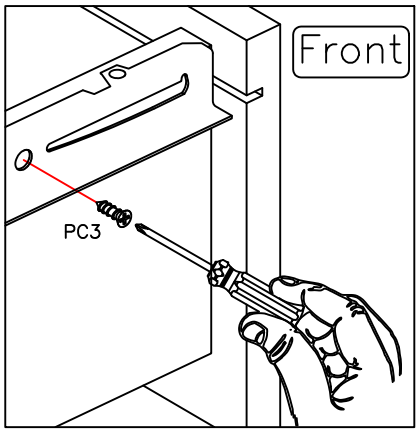

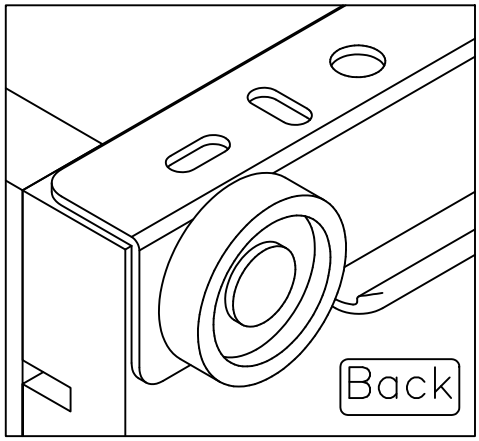

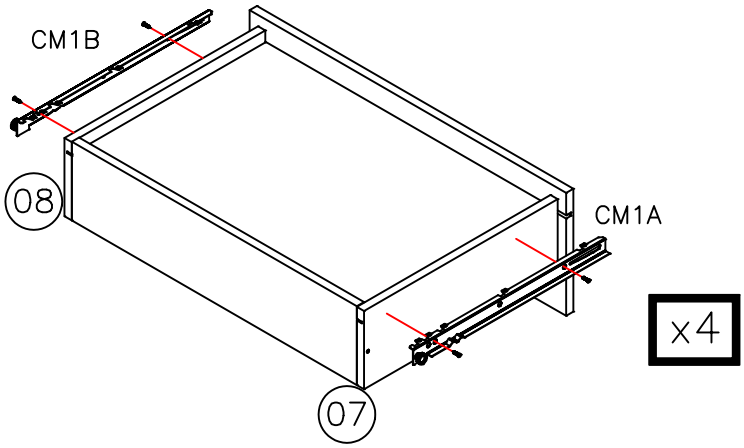

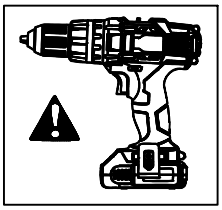

06 Drawer final assembly

This process is repeated four times (x4)

PX	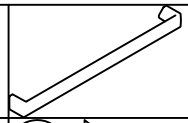	4
PC4	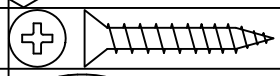	8
TP2	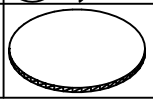	8

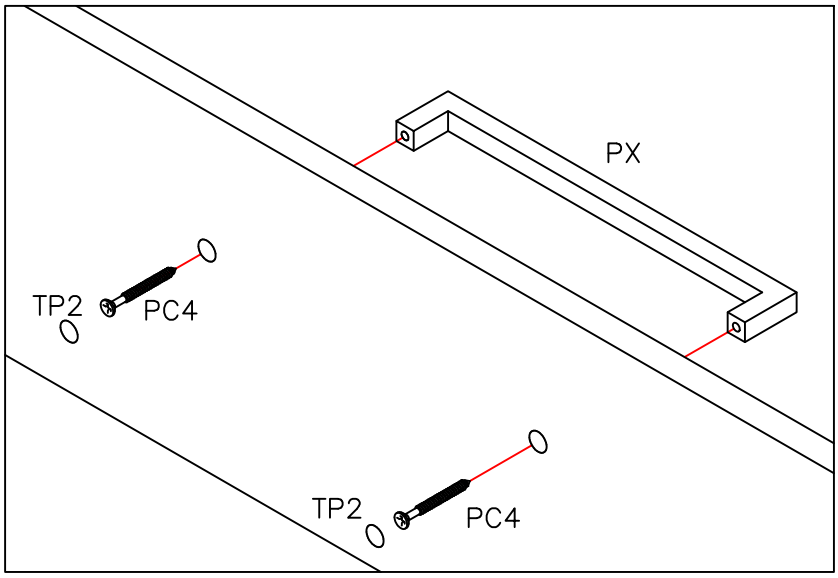

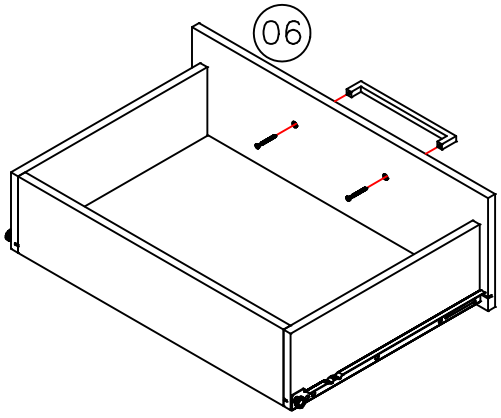

x4

07 Preassembly of parts

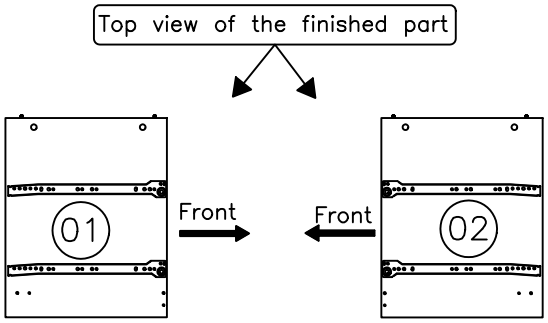

C1		8
PC3		16
CM1C		4
CM1D		4

Detailed view of CORRECT hole location in the rail for the "PC3" Screw

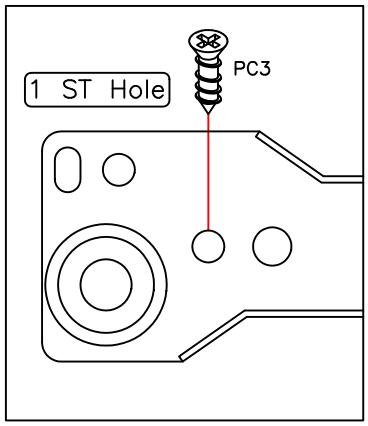

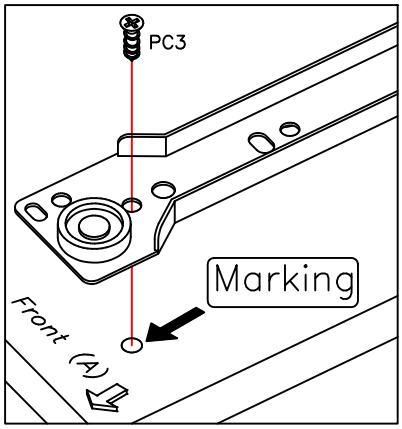

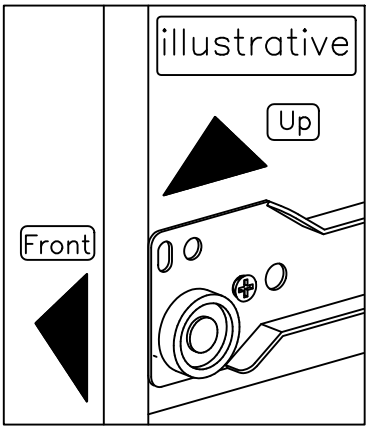

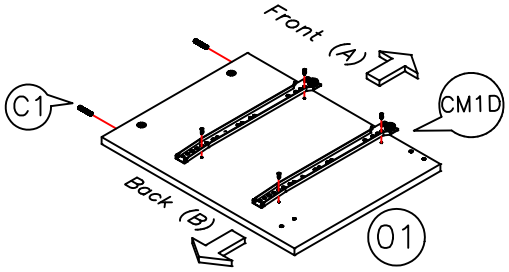

x2

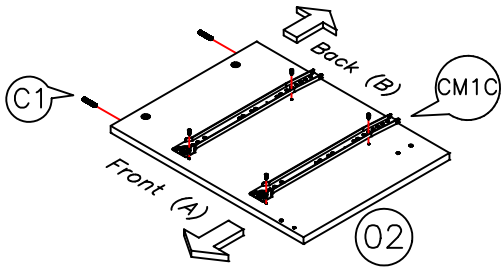

x2

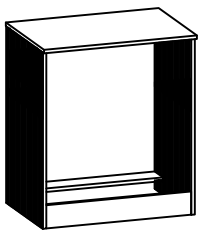

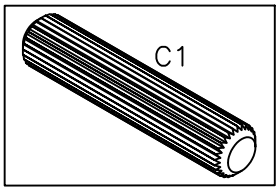

08 Preassembly of parts

C1	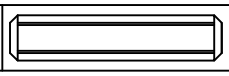	8

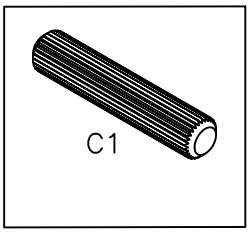

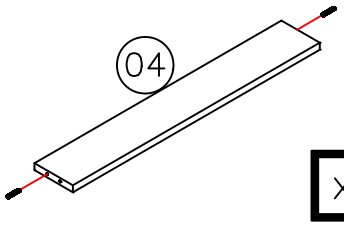

x2

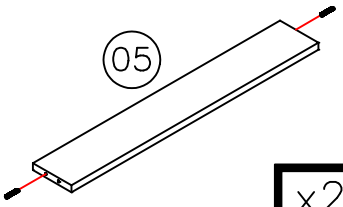

x2

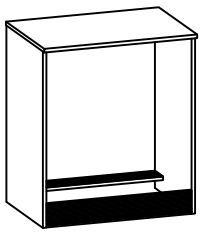

09 Preassembly of parts

PM	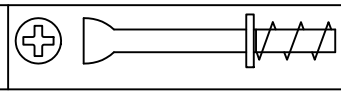	8

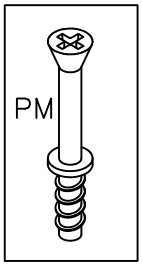

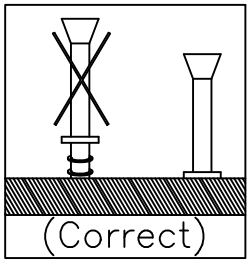

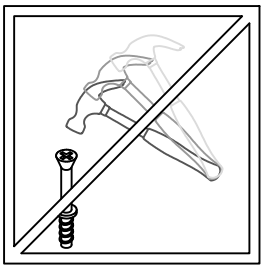

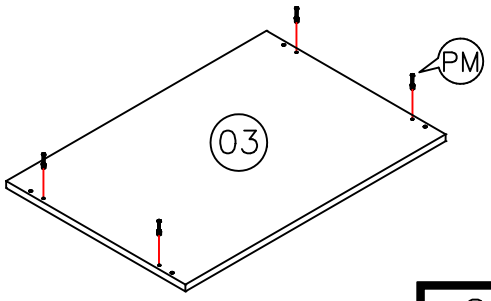

x2

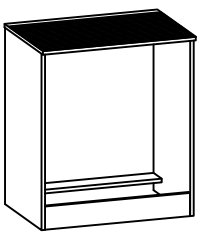

10 Preassembly of parts

PE18	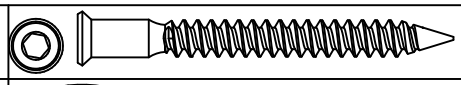	8
TP2	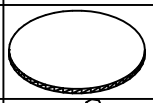	8
CZ3	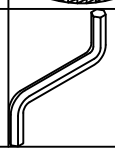	1

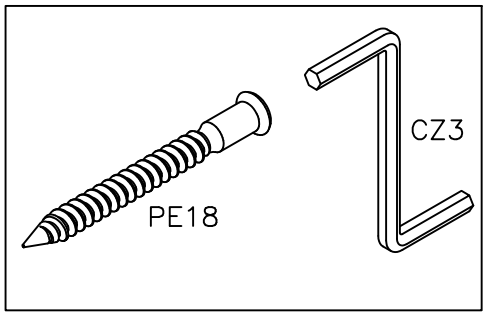

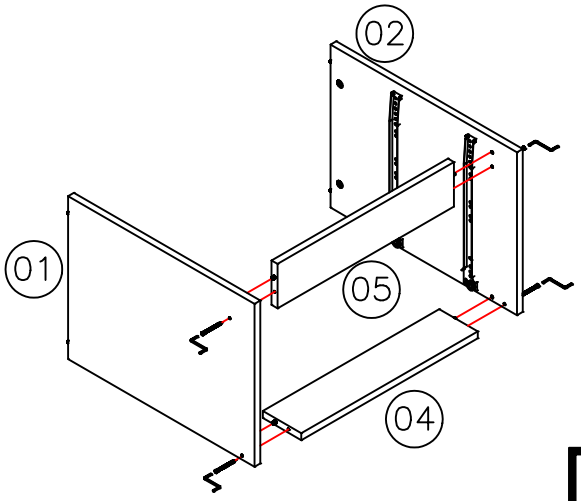

x2

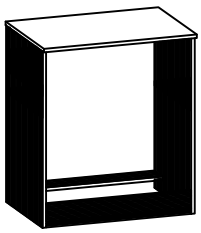

11 Product Assembly

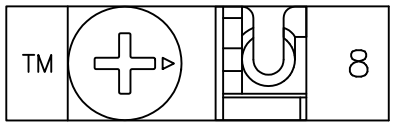

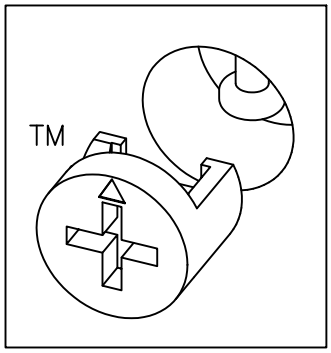

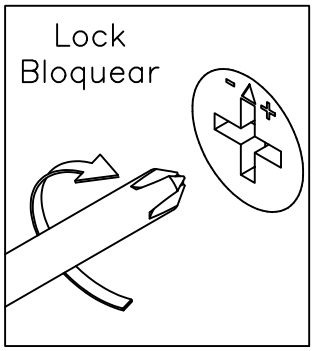

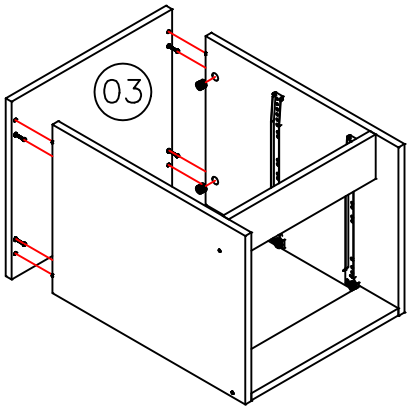

x2

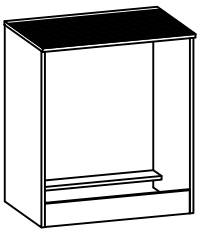

12 Product Assembly

PR2	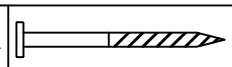	8
SD	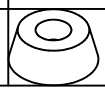	8

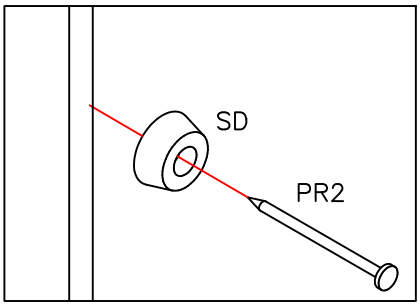

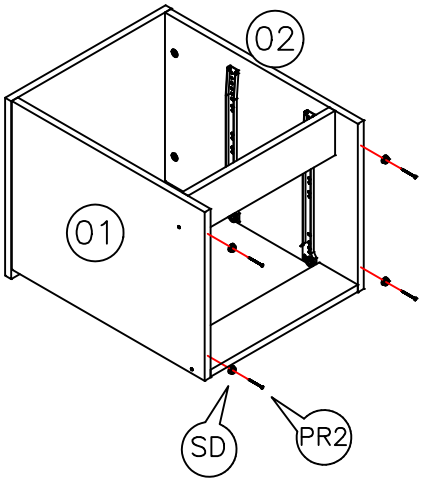

x2

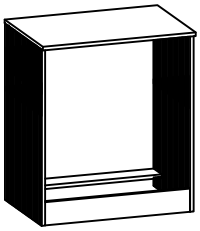

13 Product Assembly

Attention: Ensure that when nailing the back parts in place, that it is being nailed as straight as possible to the top and sides.

Failure to do so can make the drawers appear crooked.

PR1 32

1ST

x2

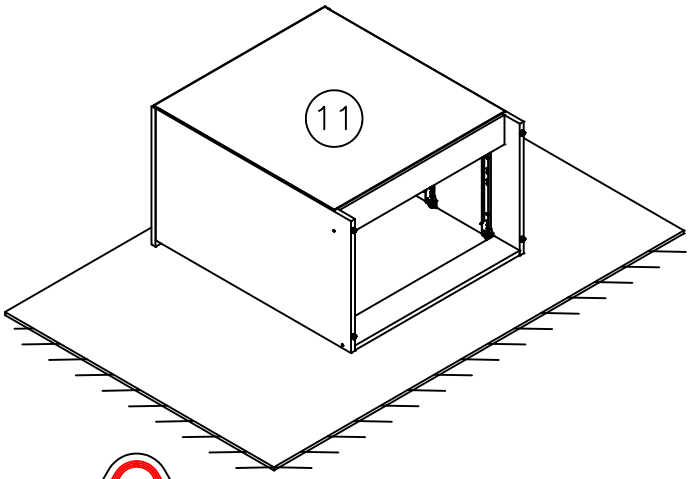



Carefully place the furniture on its front, on top the box in which it came to protect it when attaching the back panel.

Note: It is essential to place the furniture strait/squared to avoid problems with the functioning and alignment of the Drawers and Doors.

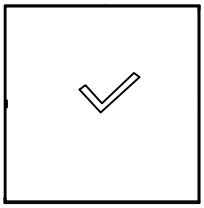

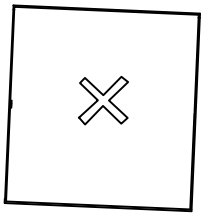

3RD

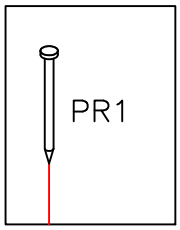

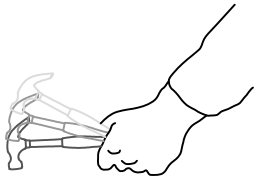

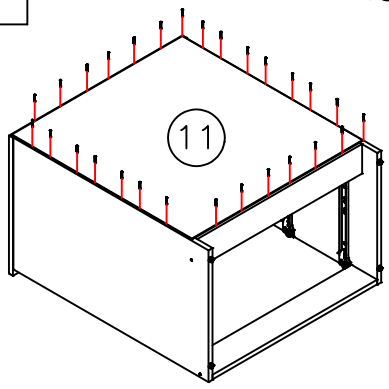

x2

After checking that the back panel is squared to the side and Top, nail the back panel in place.

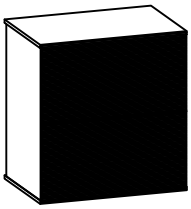

14 Product Assembly

Drawer installation

Insert the slide into the profile and close the drawer to finish locking the clip.

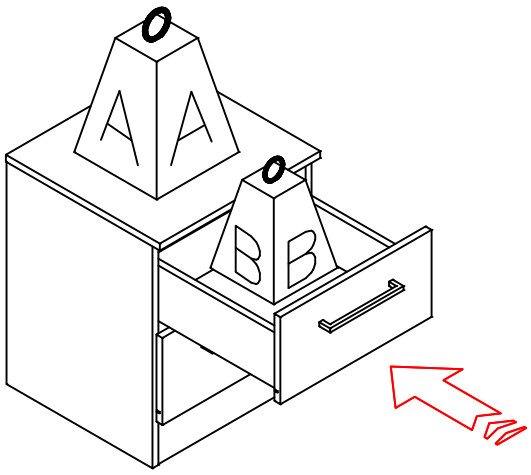

x2

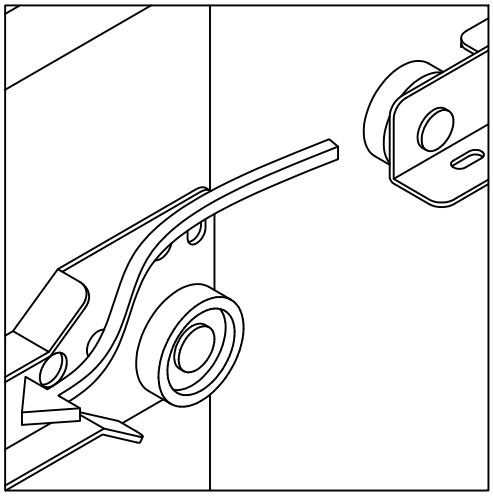

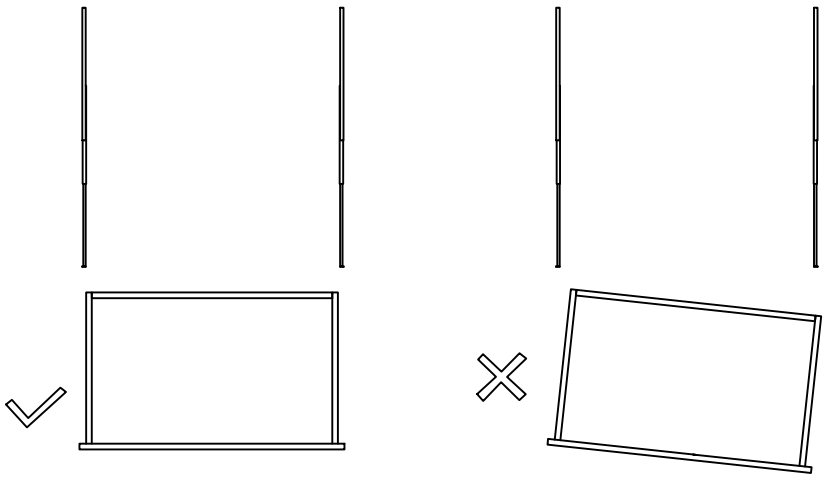

	Kg	lb
A	35	77.16lb
B	6	13.23lb

15 Product Assembly

NOTE: Do not turn the DRYWALL ANCHOR into a wall stud. If you prefer to fasten the SAFETY ANTI-TIPPING to a wall stud, go to your local hardware store for proper hardware.

Compress the wings of anchor before inserting.

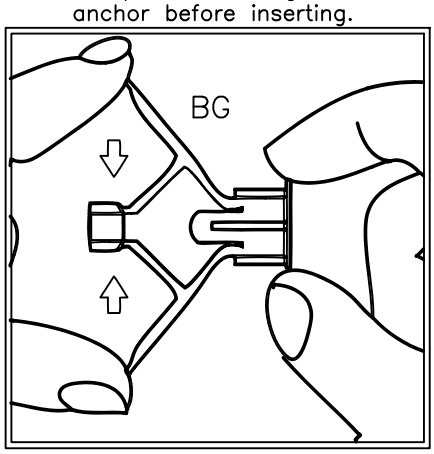

Insert the chuck into the hole of the base material.

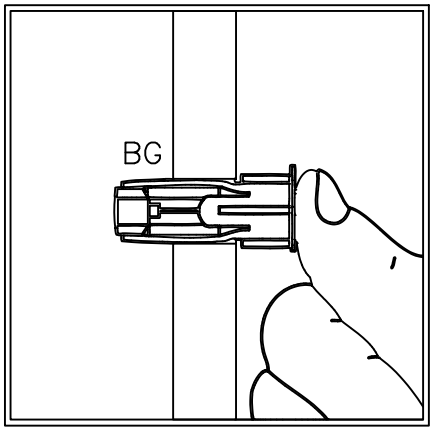

Position the object over the bushing and secure it with a screw.

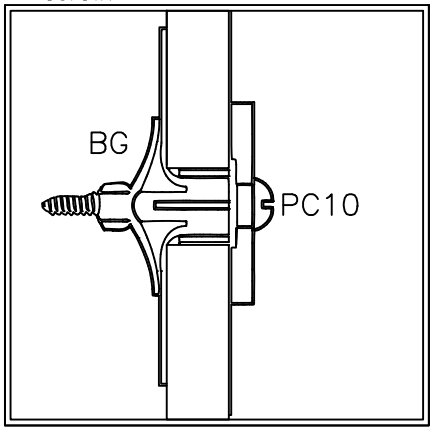

A WARNING – Anti-Tip Advisory

Potential of serious fatal crushing injuries may occur from furniture tip-over. To help prevent tip-over:

ALWAYS INSTALL the tip-over restrain that came with your furniture. This tip-over restrains only reduces but does NOT completely eliminate the risk of tip-over

- ALWAYS Place the heaviest items in the lowest/bottom drawer.
- NEVER place heavy objects on top of this product.
- NEVER allow children to scale/climb/hang on the drawers, doors, or shelves.
- NEVER open more than one drawer at a time.

B ADVERTENCIA – Aviso antivuelco

Pueden producirse lesiones graves por aplastamiento mortales debido al vuelco de los muebles. Para ayudar a prevenir vuelcos:

- SIEMPRE INSTALE el sistema de retención que viene con sus muebles. Este sistema antivuelco solo reduce pero NO elimina por completo el riesgo de vuelco.
- SIEMPRE coloque los artículos más pesados en el cajón más bajo /inferior.
- NUNCA coloque objetos pesados encima de este producto.
- NUNCA permita que los niños escalen, trepen o se cuelguen de los cajones, puertas o estantes.
- NUNCA abra más de un cajón a la vez

Anti-tipping installation

SF	Mounting bracket	4
ANY	Clamp	2
PC10	Screw 4,5x50	4
PF4	Screw 3,5x16 BC	4
BG	Anchor	4

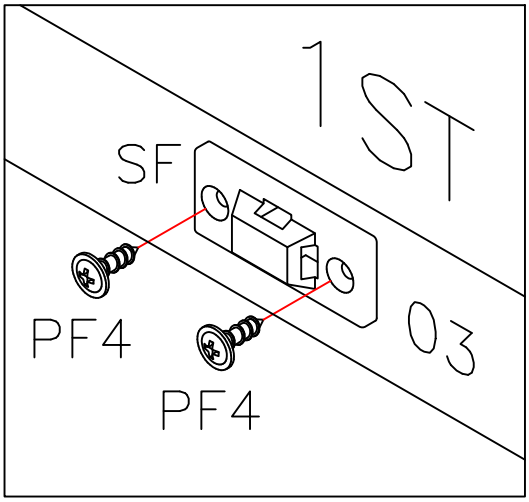

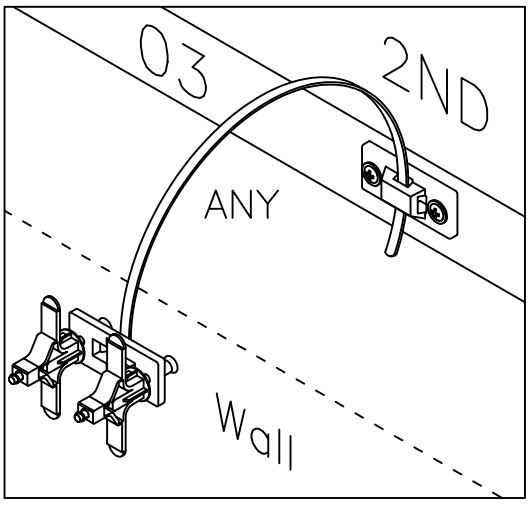

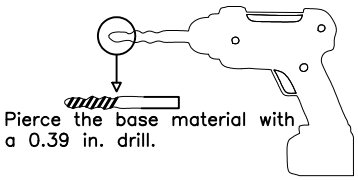

Important

- The minimum length of the screw must be the bushing length + object thickness that will be fixed.
- To guarantee the wing expansion function of the bushing, after the screw head is at the object to be fixed, one must continue to rotate the screw until maximum torque is reached.

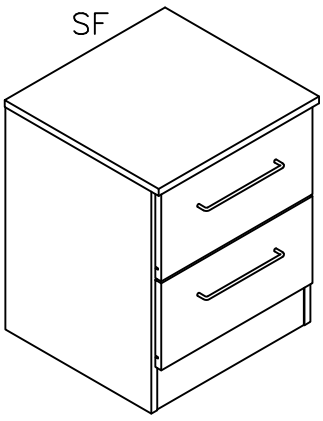

16 Product Assembly

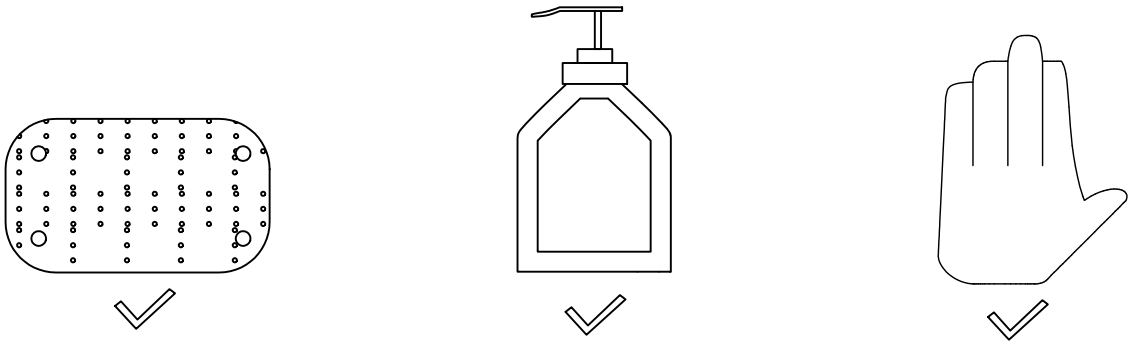

To Remove the printed number, apply a small amount of Glass Cleaner or Hand sanitizer and wipe with a paper towel.

