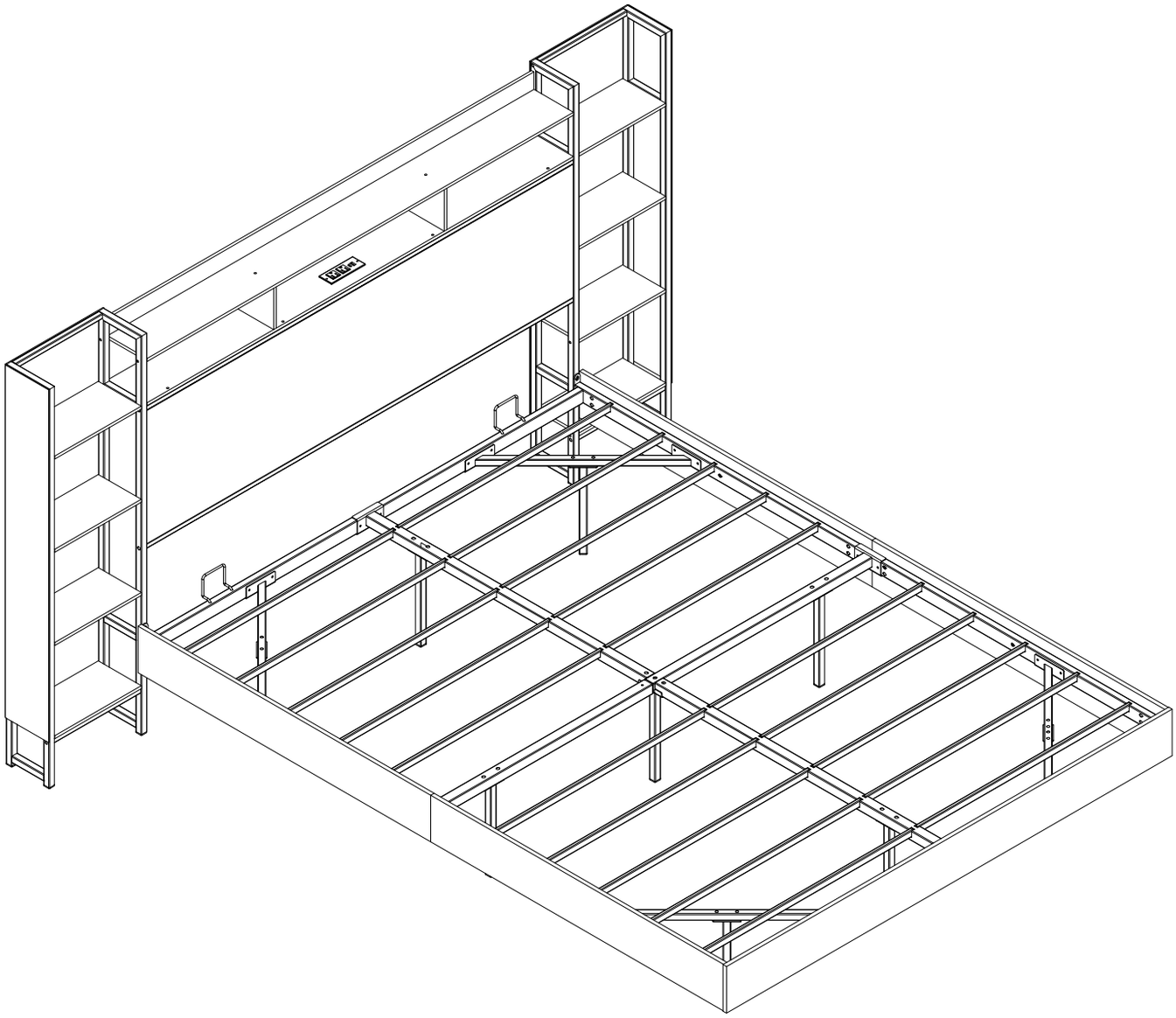

Warning

- The product must be installed and used according to the steps and recommendations in the instructions. The seller assumes no responsibility for any injury or damage caused by improper assembly or improper use by the user.
- Children are not allowed to assemble this product. During assembly, all small parts should be kept out of the reach of children to avoid swallowing or inhaling and related injuries.
- Please keep plastic packaging away from children to avoid choking hazards when playing.
- Please wear gloves during assembly/disassembly to avoid cuts.
- Please assemble the product on a spacious area and do not place the unpacked product directly on the floor to avoid damage.
- Please avoid long-term moisture to prevent mold and deformation.
- Please keep the product away from sharp objects and corrosive substances.
- Please check the tightness of the screws regularly during use. Re-tighten loose screws to ensure structural integrity.
- Depending on the type of furniture and the environment in which it is used, consider using fasteners to secure the furniture to the wall or other objects to prevent it from tipping over.
- Place the product on a flat and stable surface during use

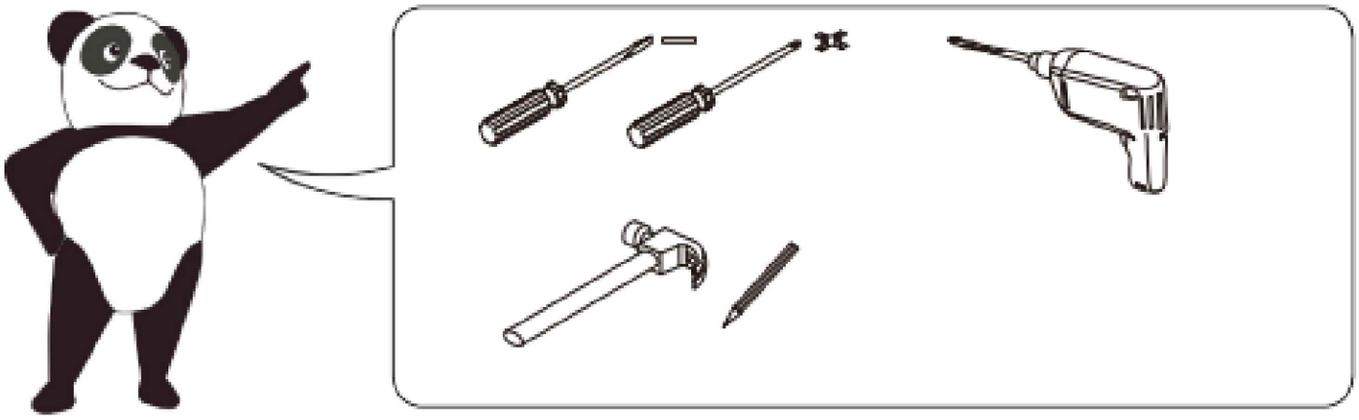

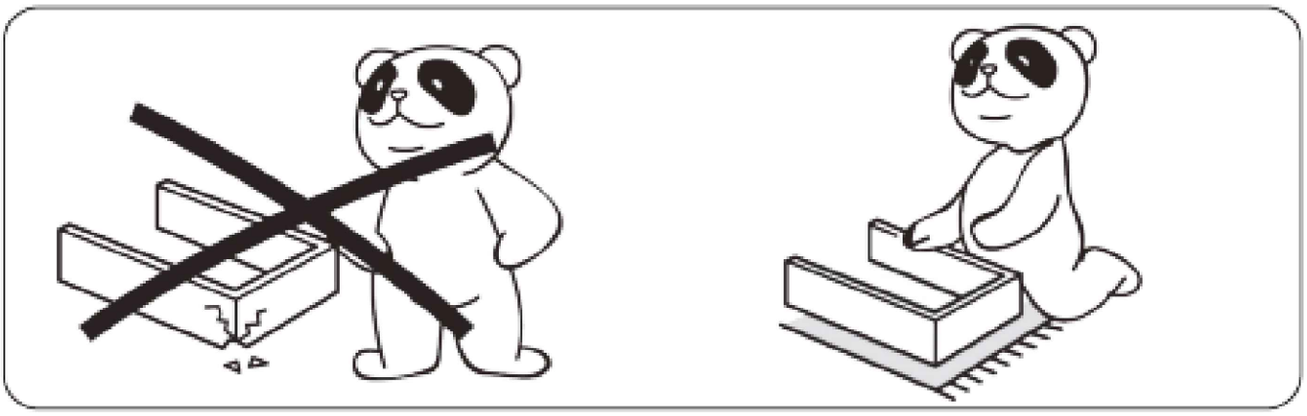

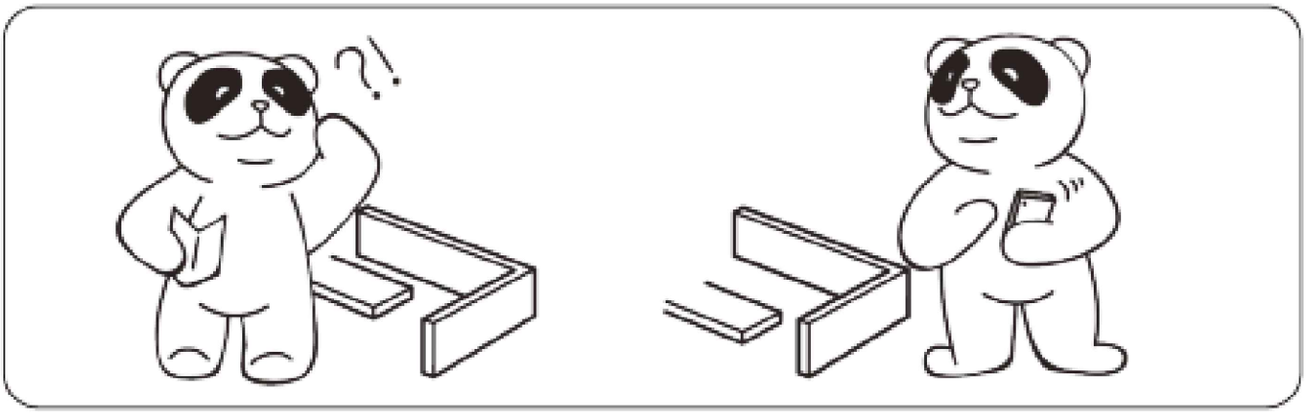

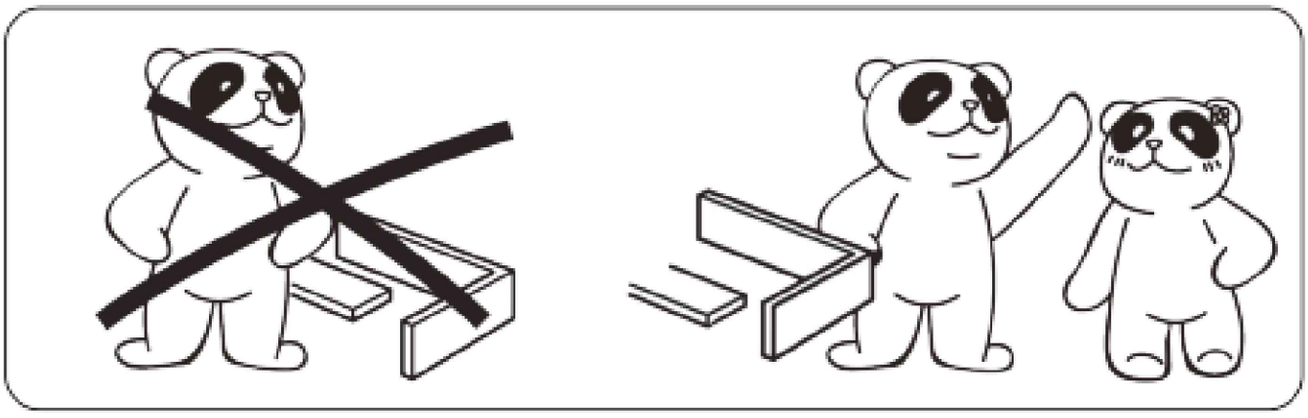

Note:

1.Should be assembled on flat ground to keep balance.

2.Before completing the installation, do not tighten the screws.

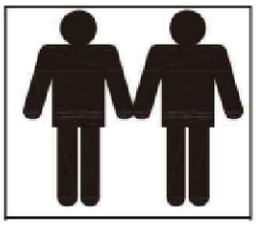

It needs at least Before starting the two people to install.

Before starting the assembly, you must read the whole manual and follow the instructions

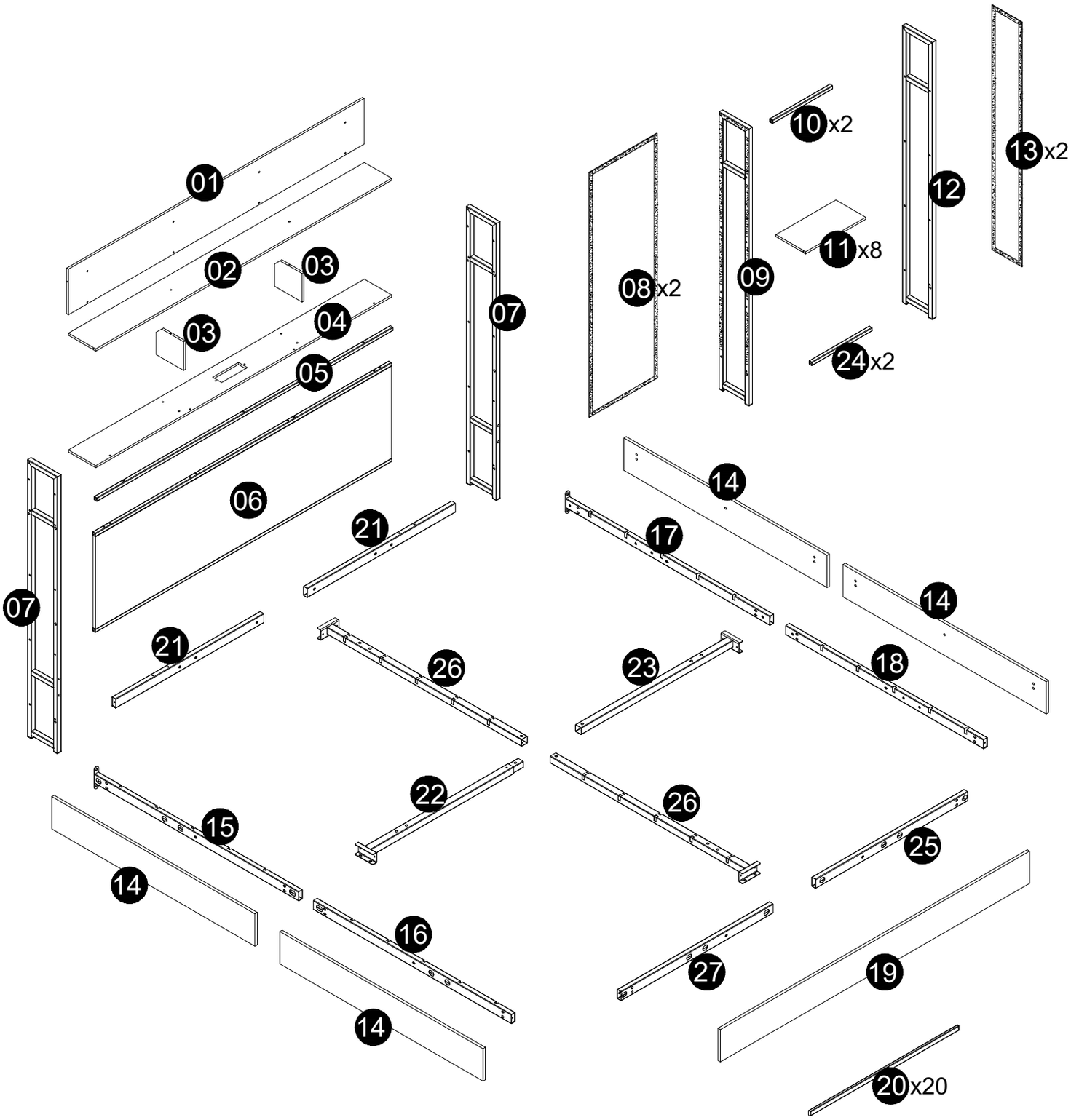

HARDWARE LIST

A 4*25mm 4PCS	B 6*10mm 26PCS	C 8*35mm 4PCS	D 4*10mm 2PCS
E 6*28mm 44PCS	F 5*40mm 53PCS	G 6*40mm 25PCS	H M8 4PCS
I 4PCS	J 2PCS	K M8 4PCS	L 27.5cm 1PC
M 27.5cm 4PCS	N 26.5cm 4PCS	O 1PC	P 1PC
Q 1PC	R 1PC	S	T 1PC
U 1PC	V M8 1PC	W M4 1PC	X 1PC
Y M6 1PC			

1

D	4*10mm	2pcs
Q		1pc
P		1pc
X		1pc

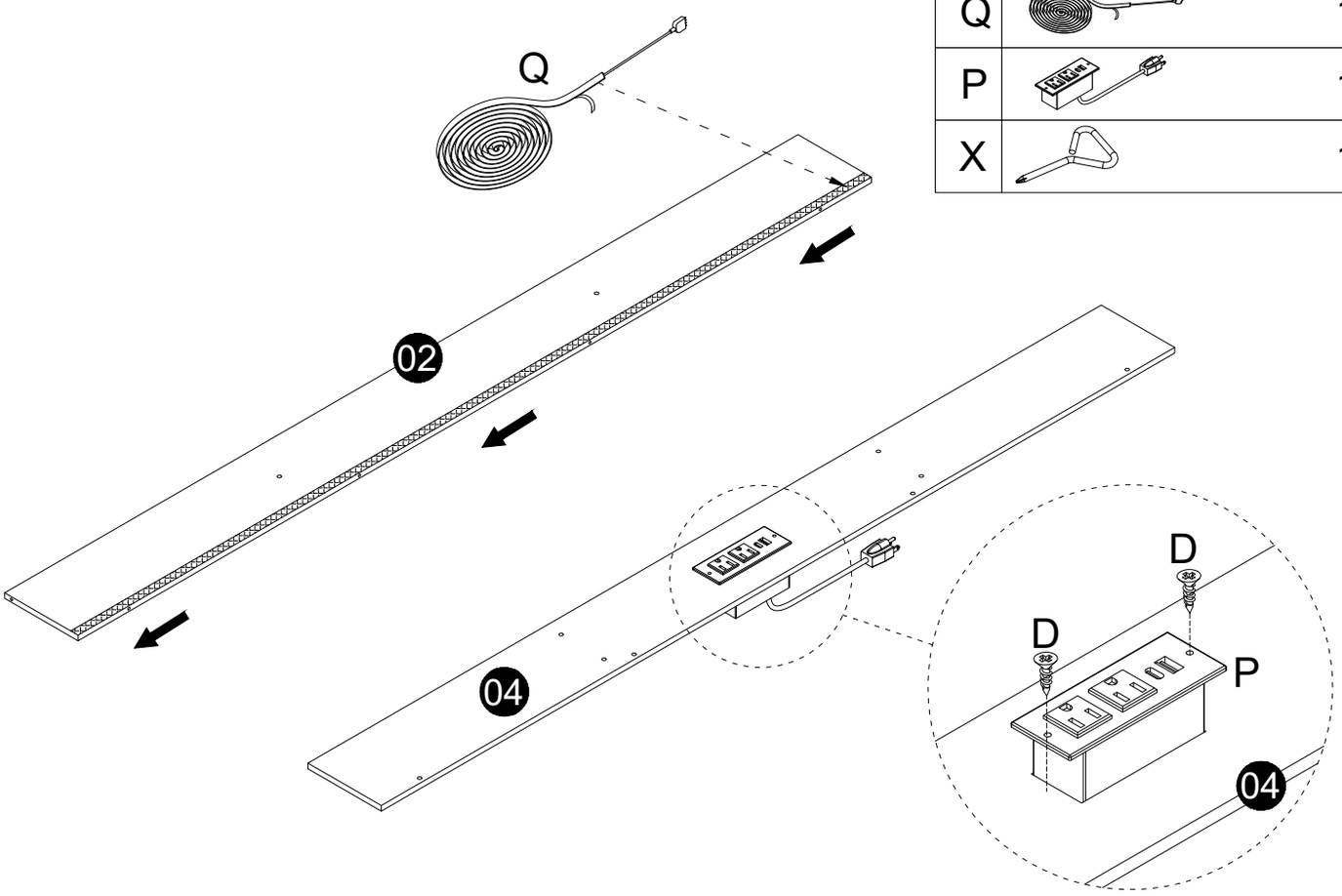

2

F	5*40mm	6pcs
W	M4	1pc

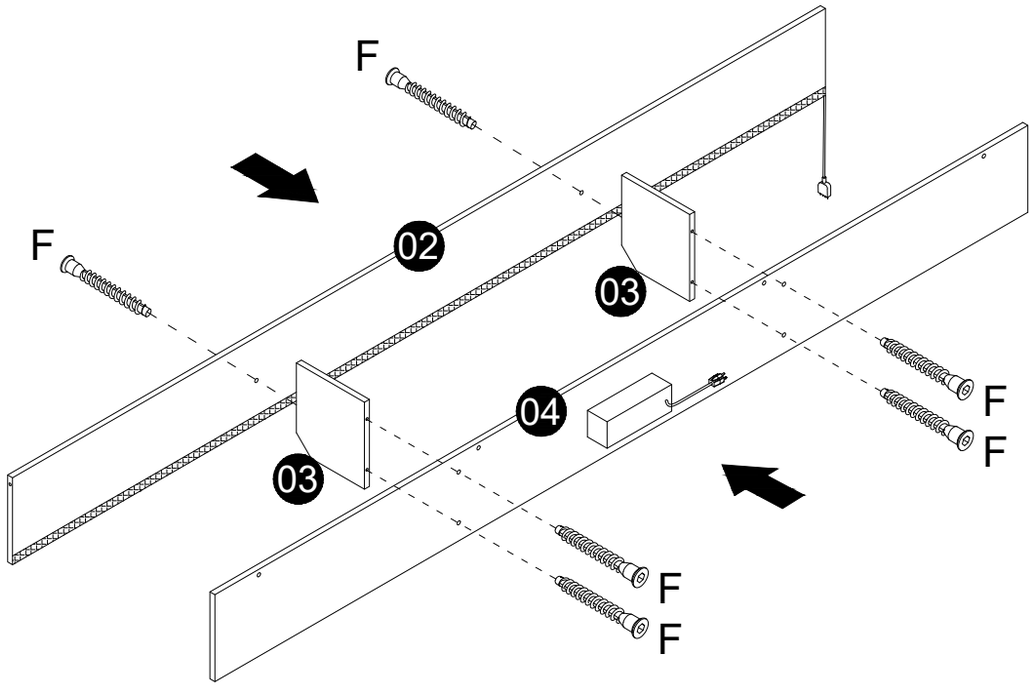

3

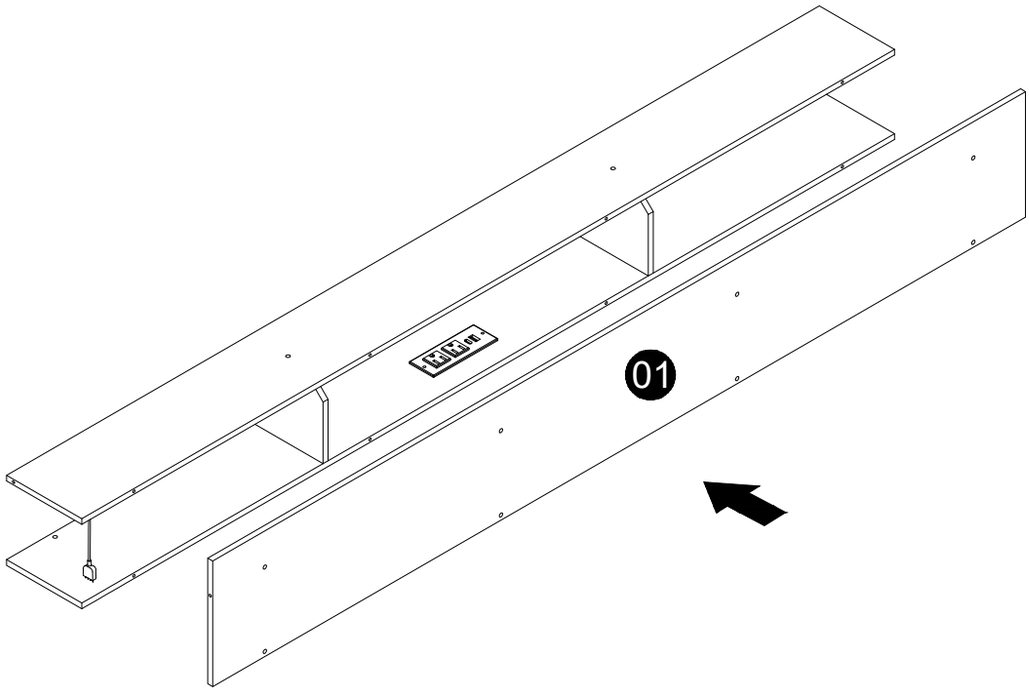

4

F	5*40mm	8pcs
W	M4	1pc

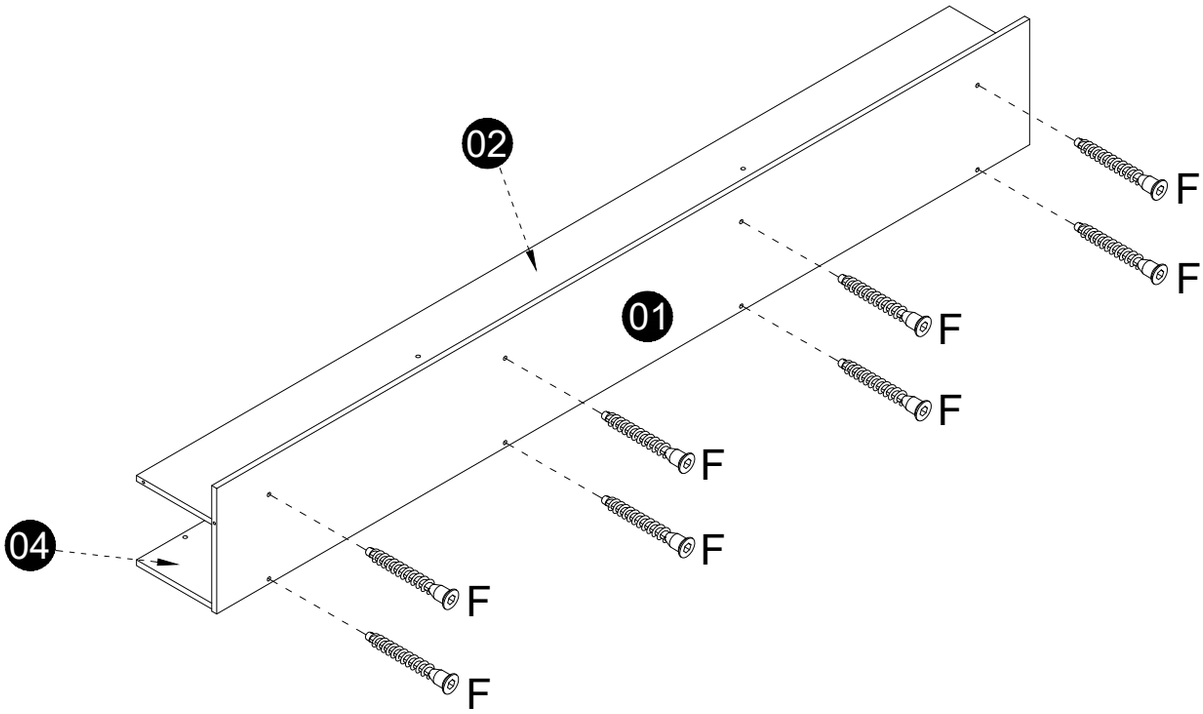

5

F	5*40mm	3pcs
W	M4	1pc

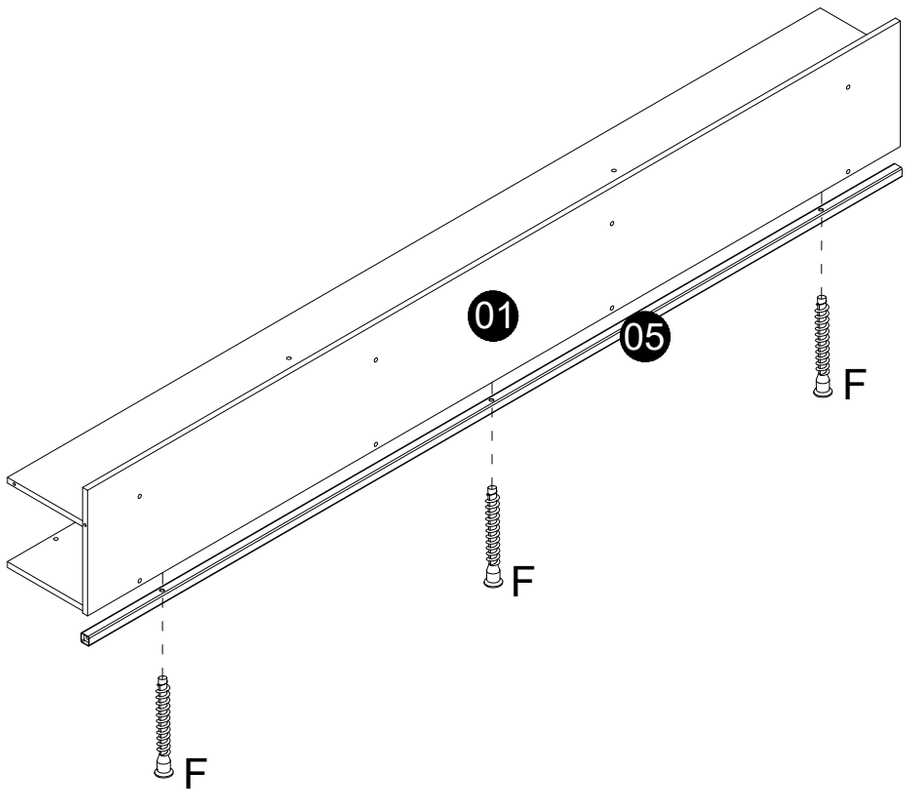

6

F	5*40mm	16pcs
W	M4	1pc

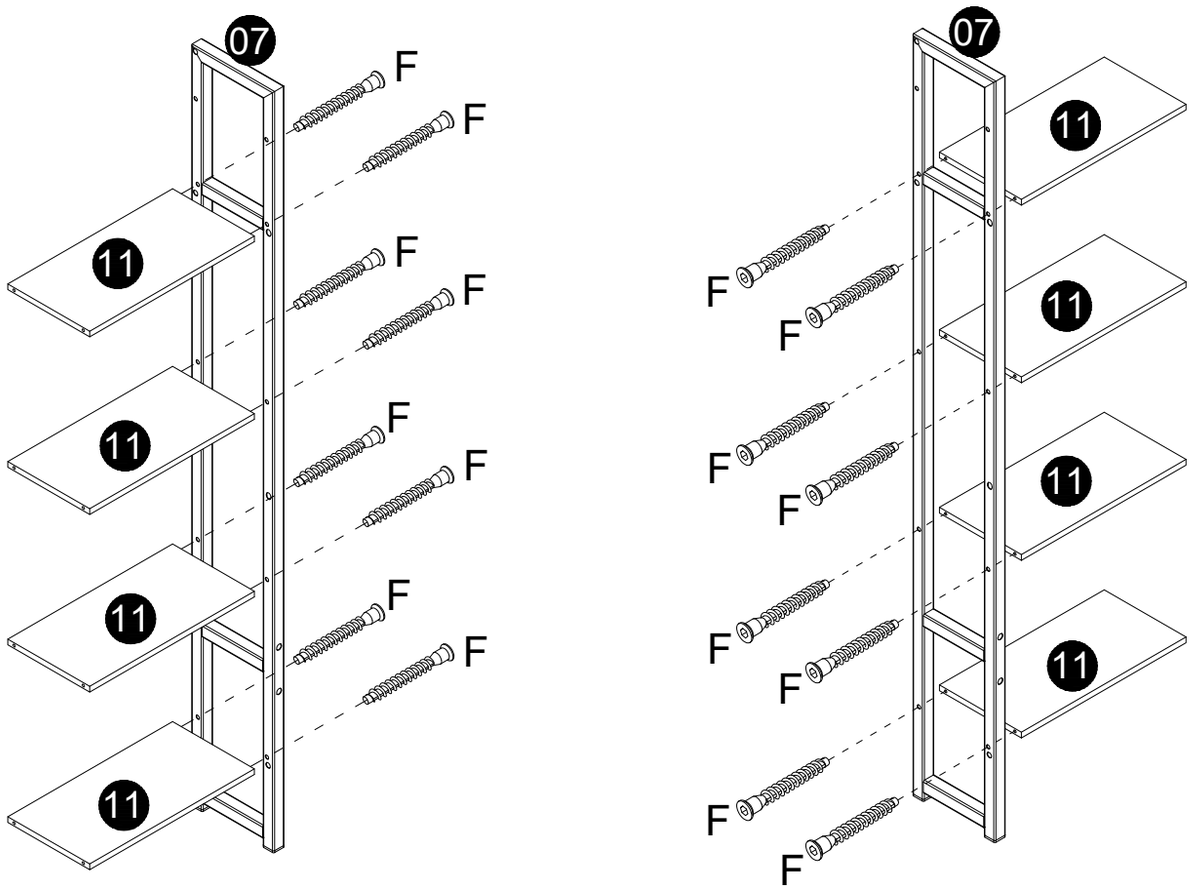

7

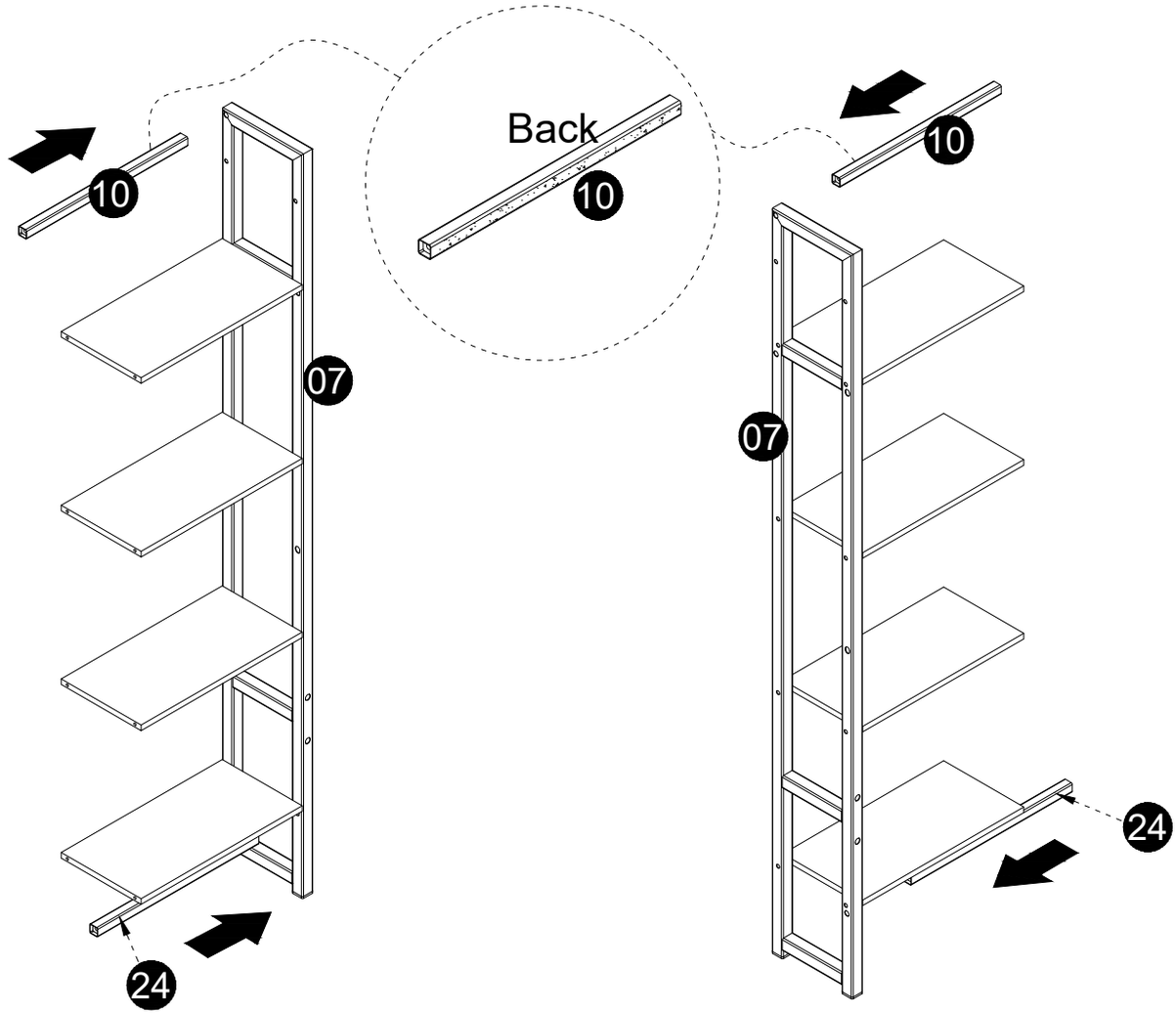

8

Y		M6	1pc	G		6*40mm	4pcs

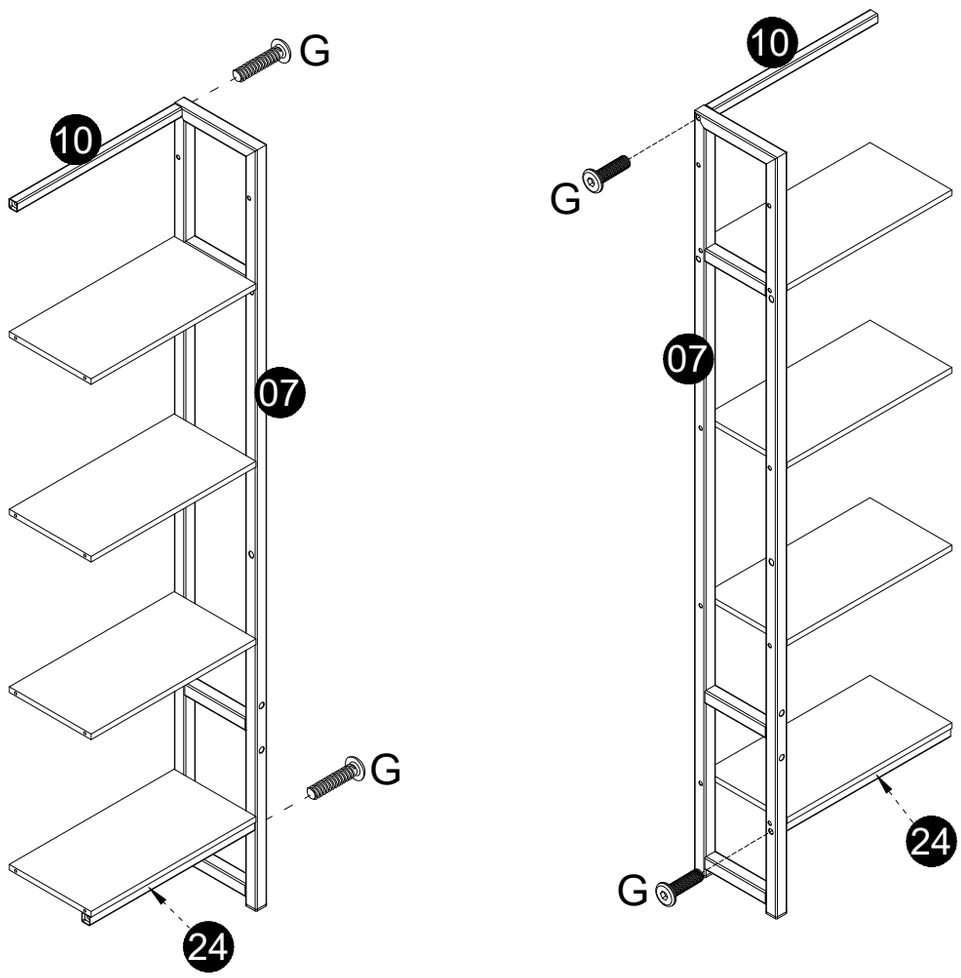

9

W	M4	1pc	F	5*40mm	16pcs
Y	M6	1pc	G	6*40mm	4pcs

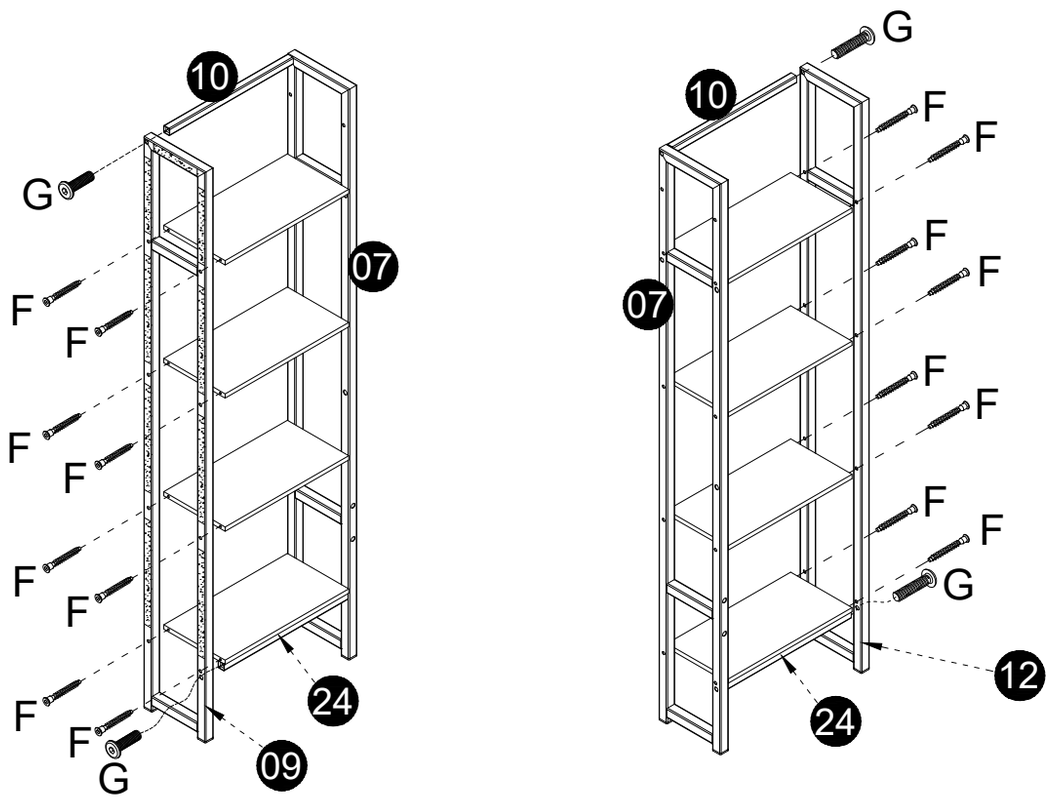

10

G	6*40mm	4pcs
Y	M6	1pc

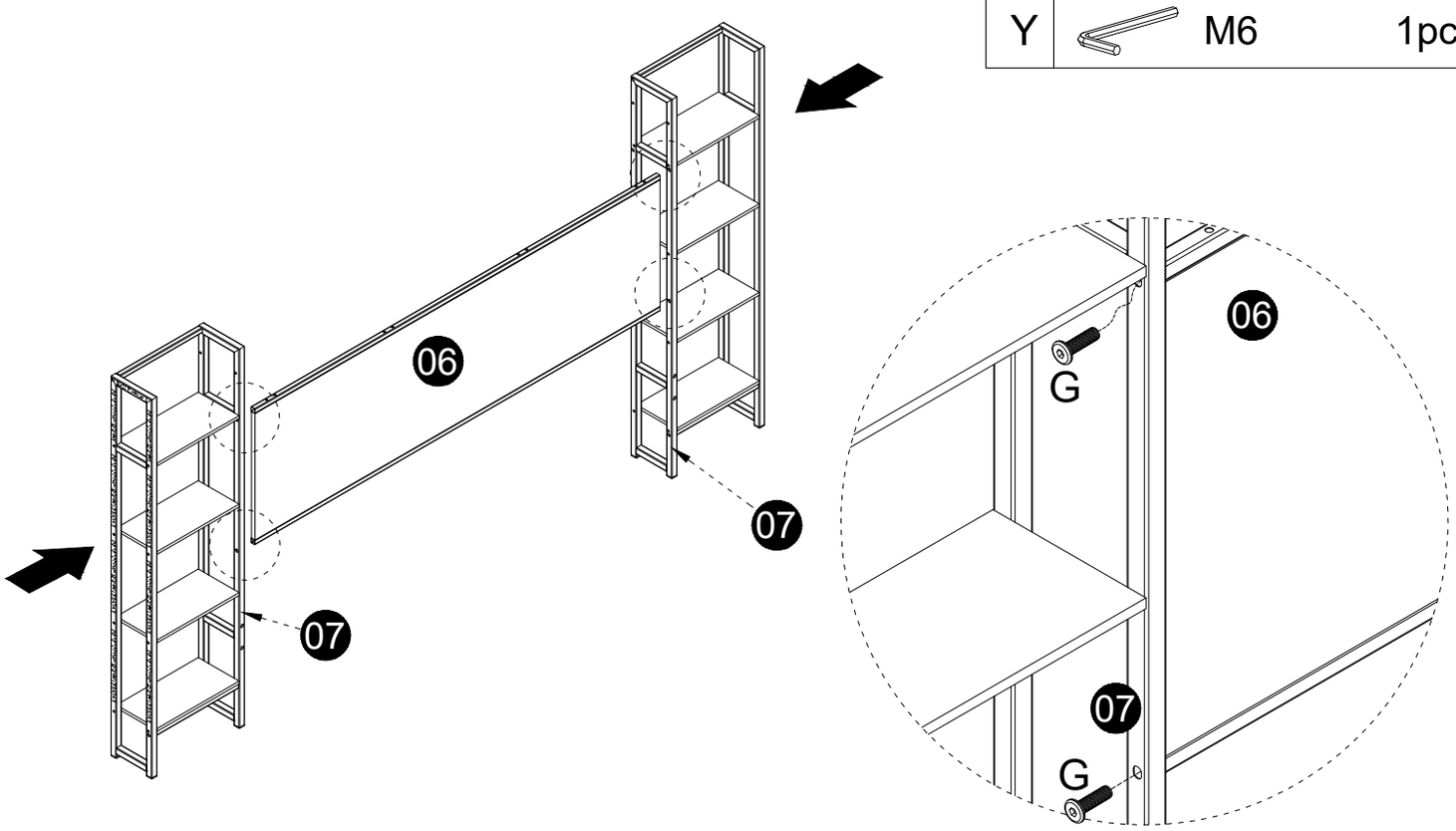

11

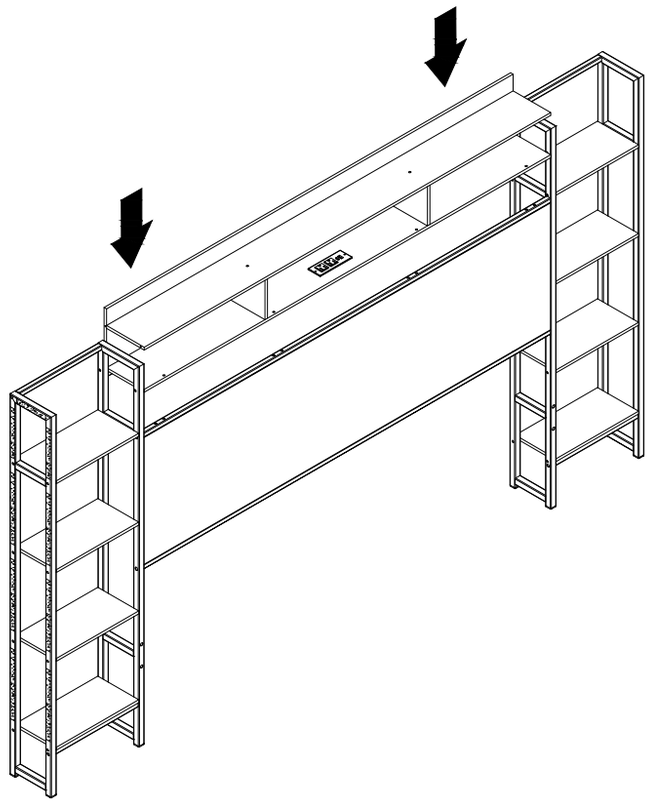

12

F	5*40mm	4pcs
G	6*40mm	2pcs
Y	M6	1pc
W	M4	1pc

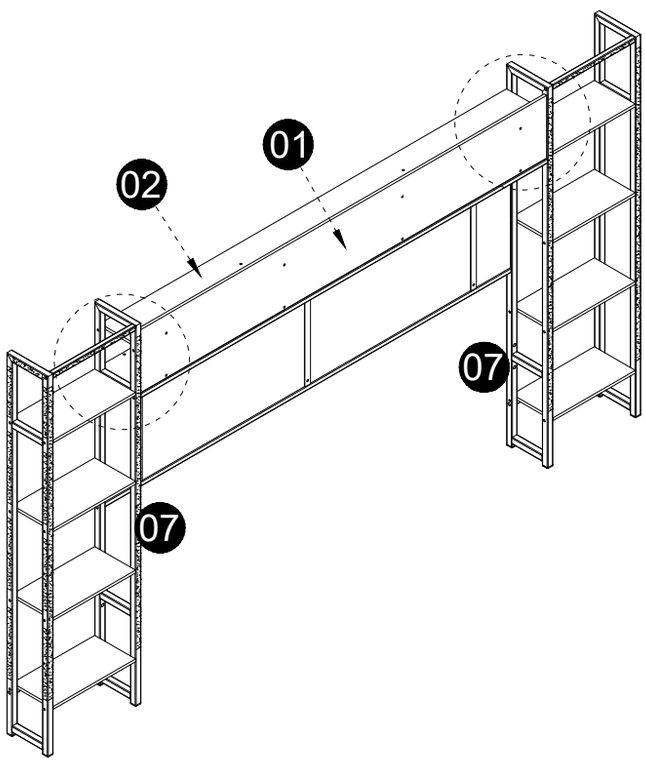

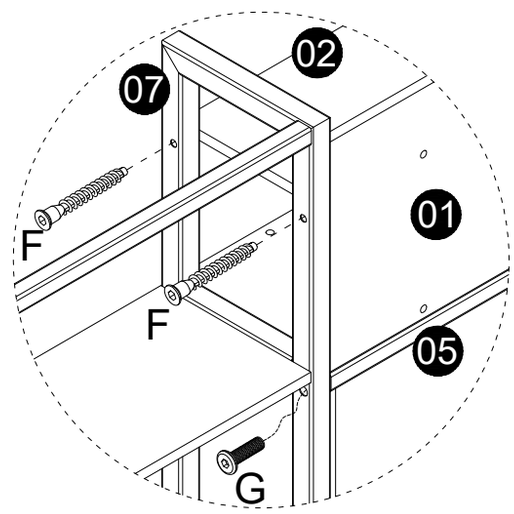

13

A		4*25mm	4pcs
X			1pc

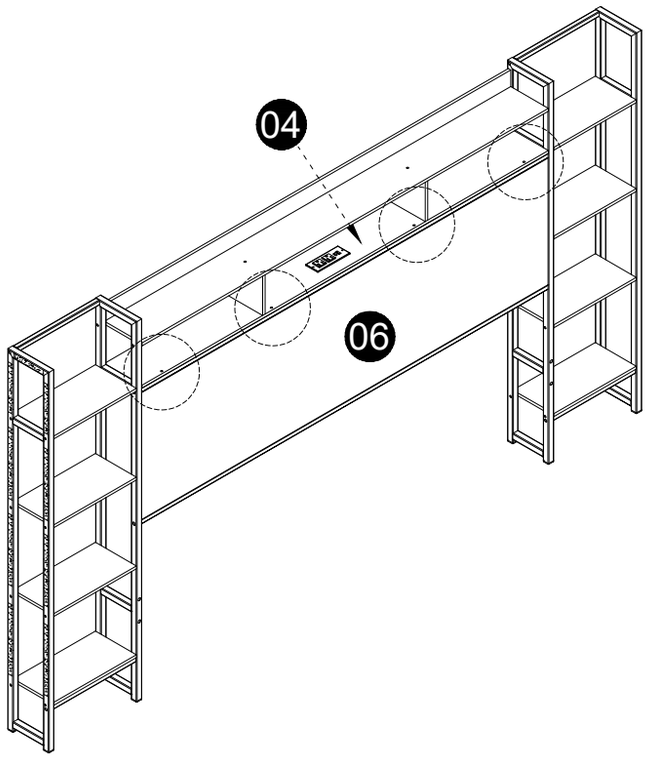

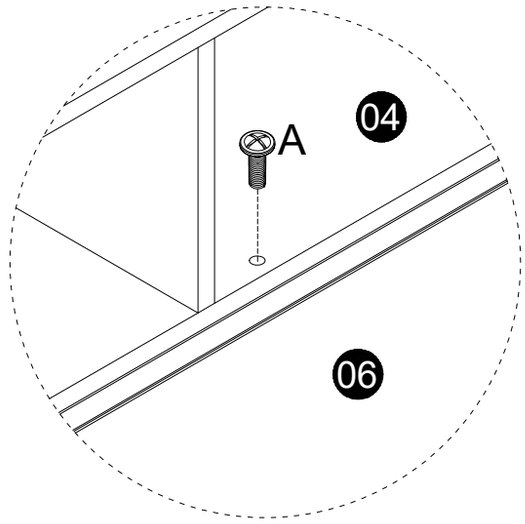

14

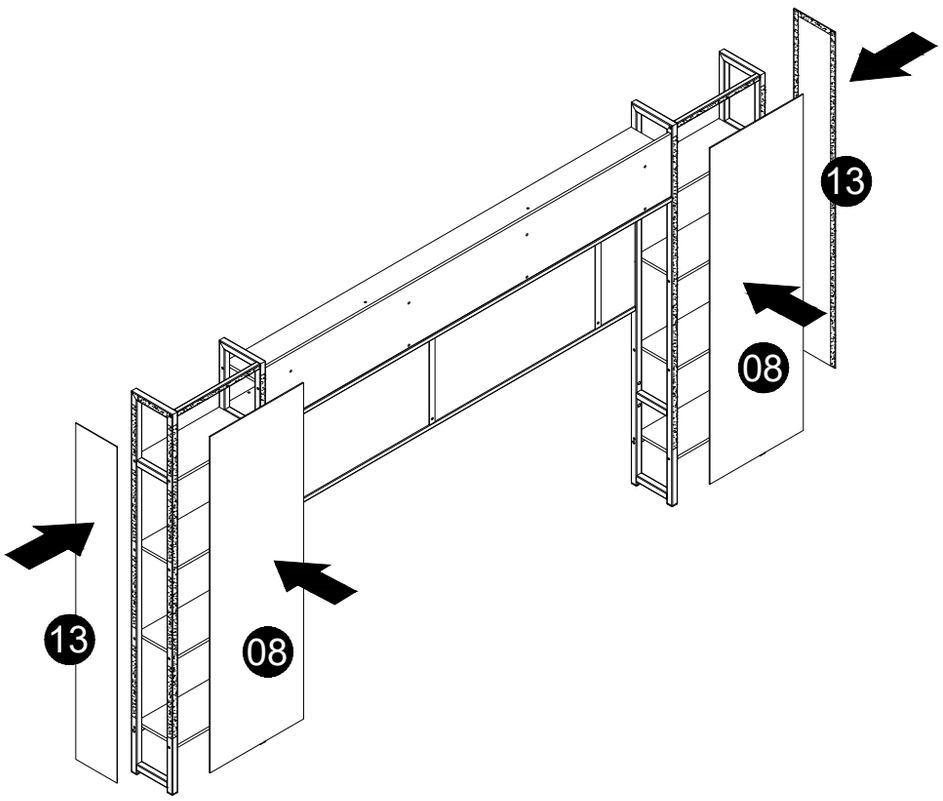

15

G	6*40mm	4pcs
M	27.5cm	2pcs
Y	M6	1pc

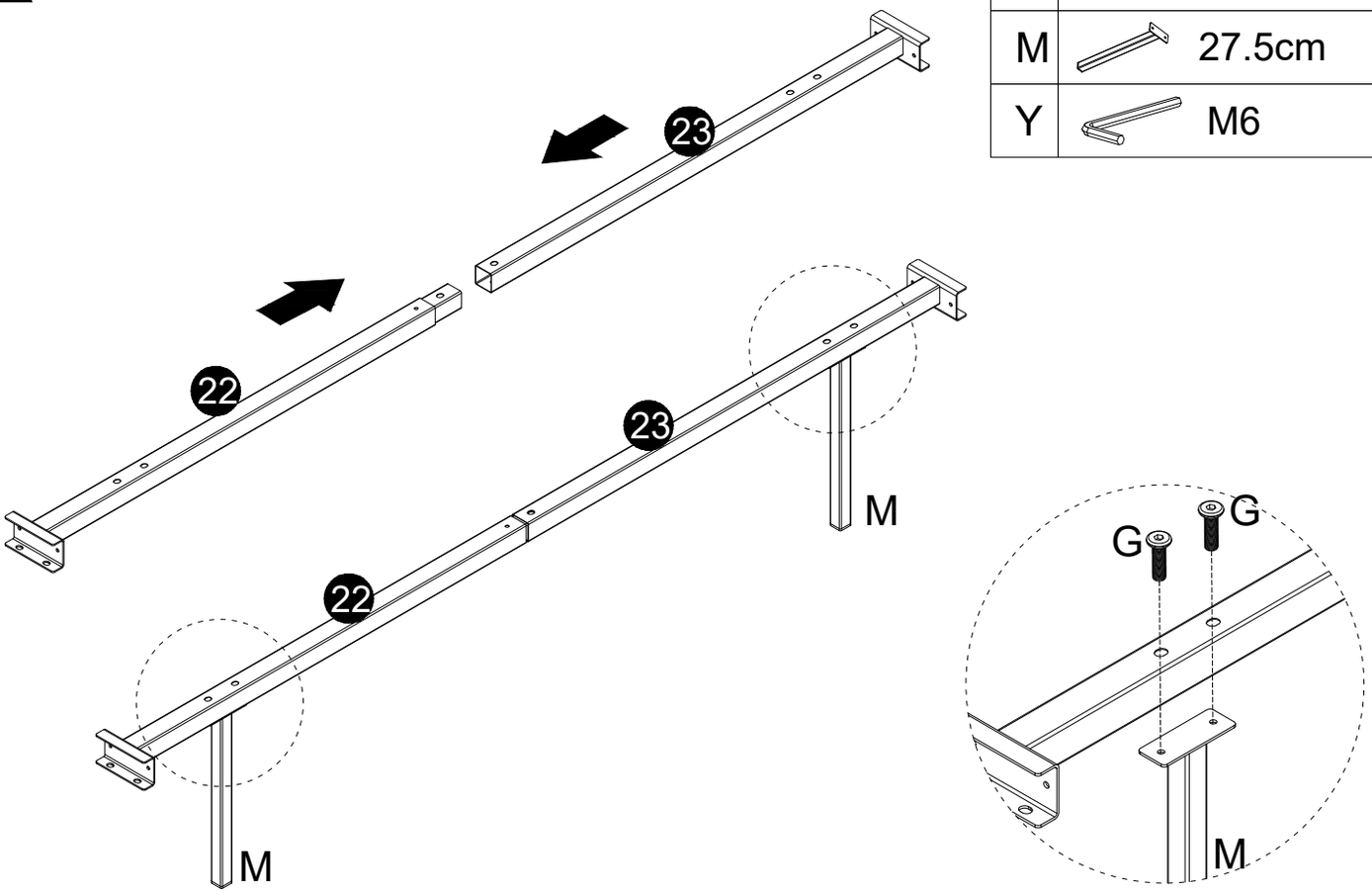

16

G	6*40mm	4pcs
M	27.5cm	2pcs
Y	M6	1pc

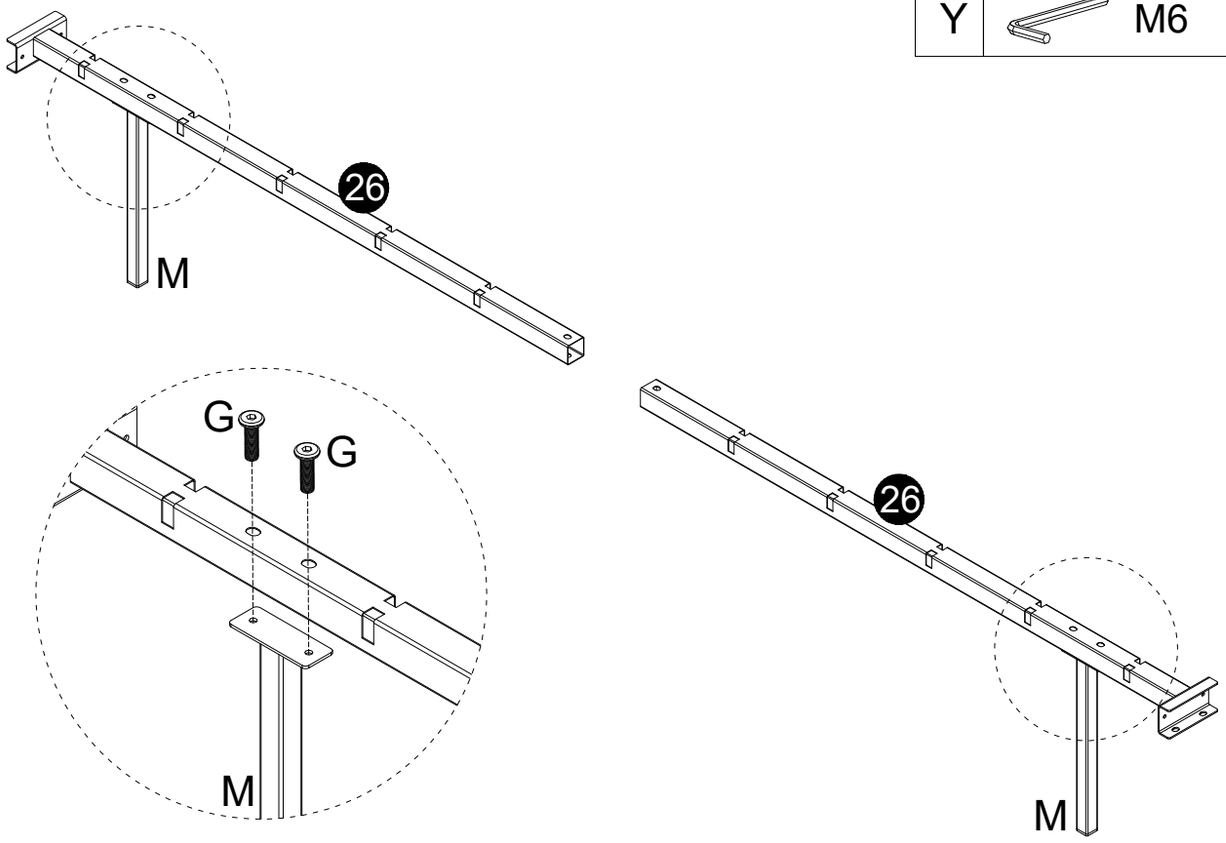

17

L	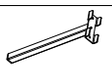	27.5cm	1pc

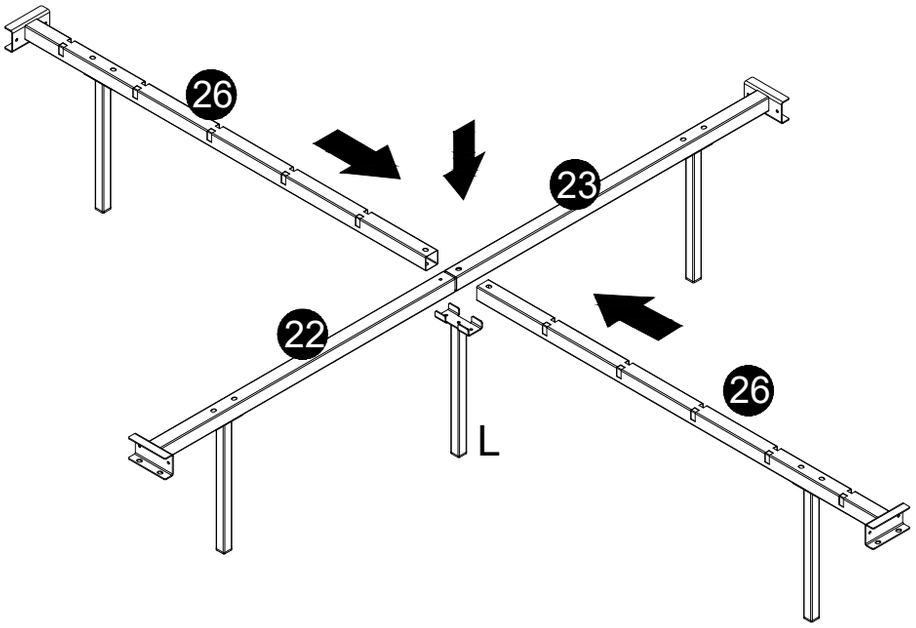

18

G		6*40mm	3pcs
Y	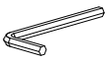	M6	1pc

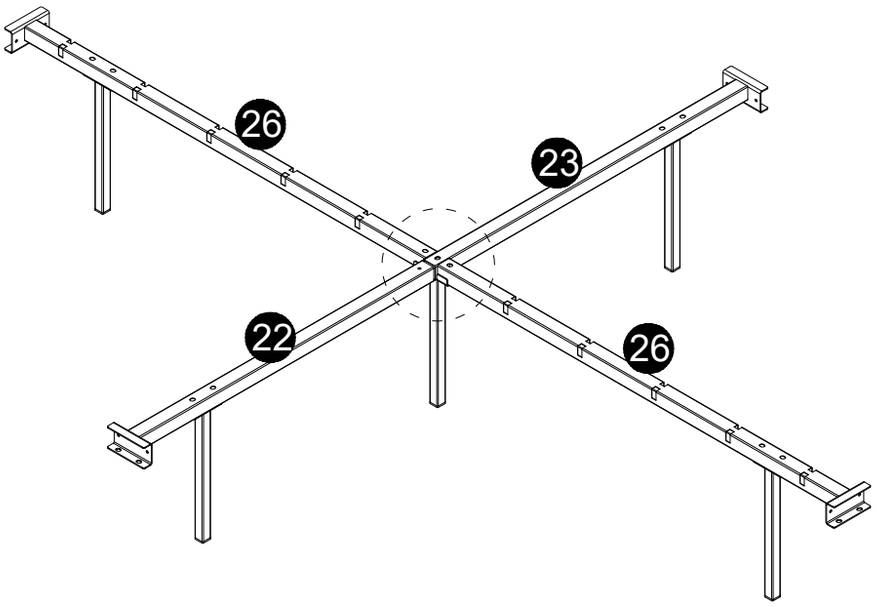

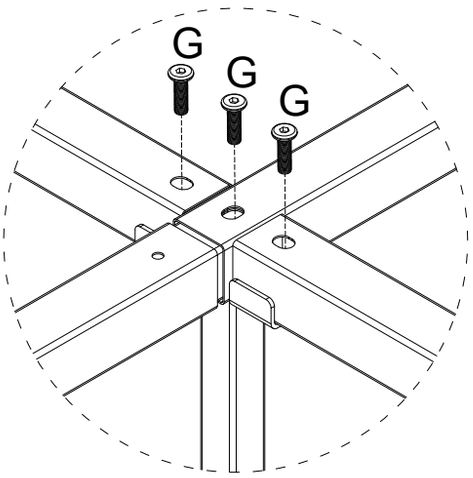

19

B		6*10mm	4pcs
Y		M6	1pc

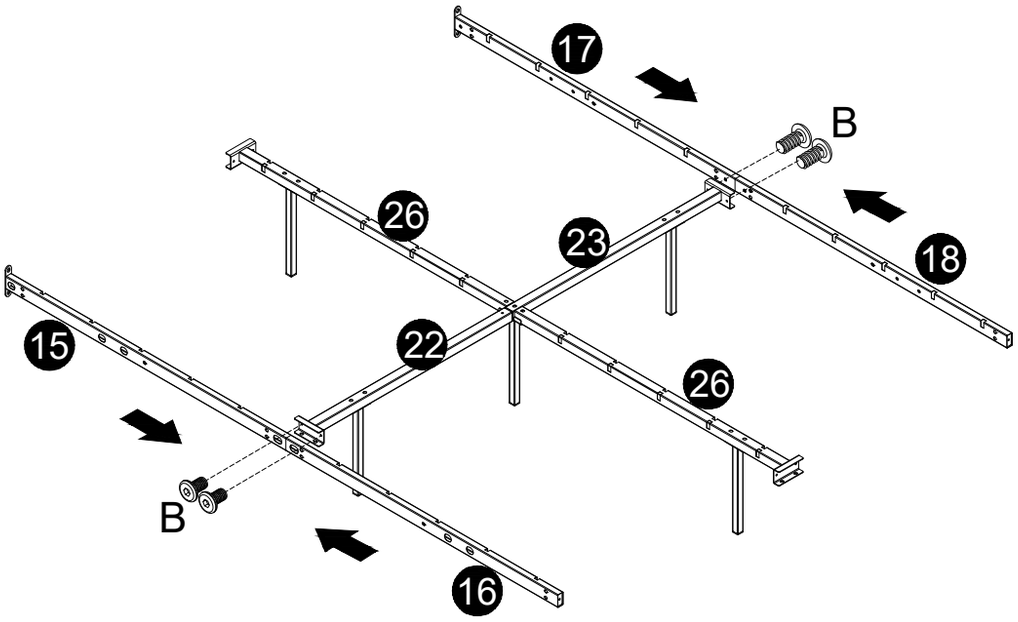

20

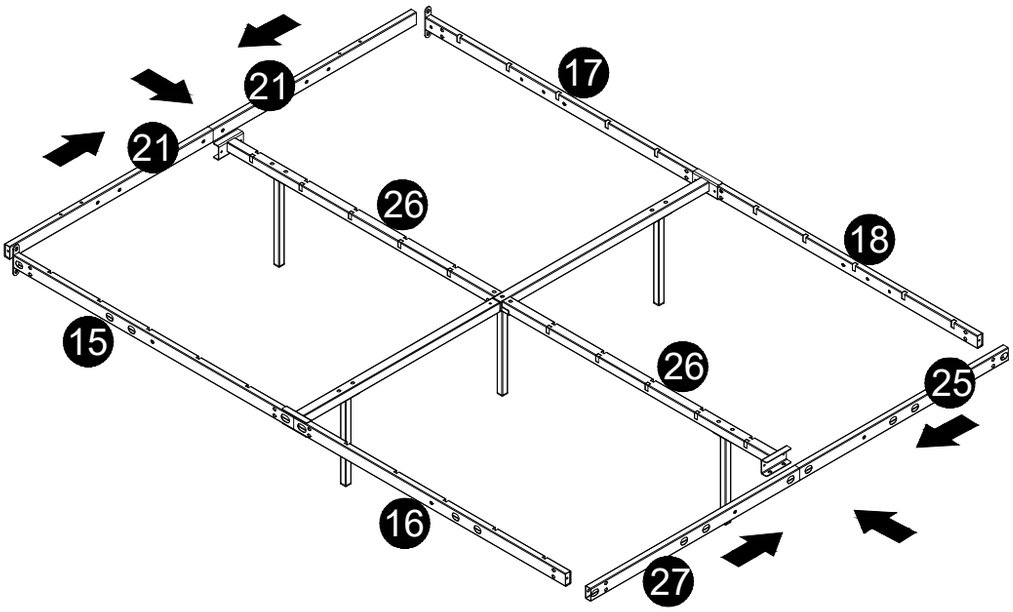

21

E	6*28mm	6pcs
B	6*10mm	2pcs
Y	M6	1pc

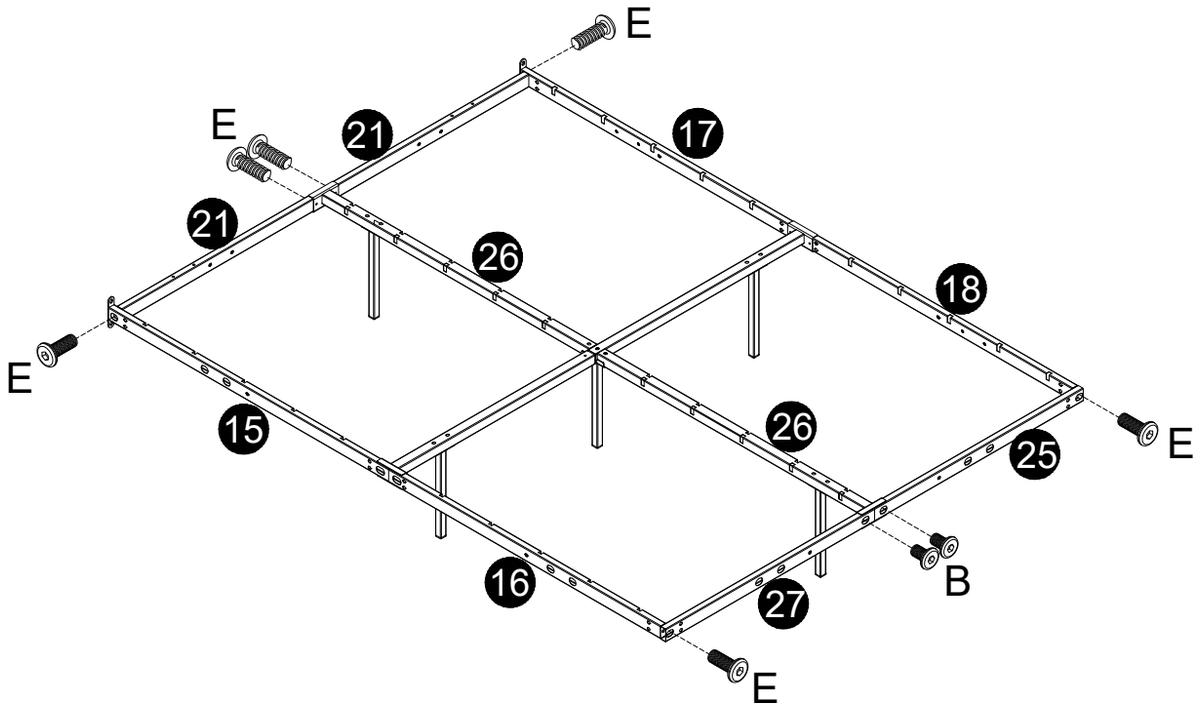

22

B	6*10mm	8pcs
Y	M6	1pc

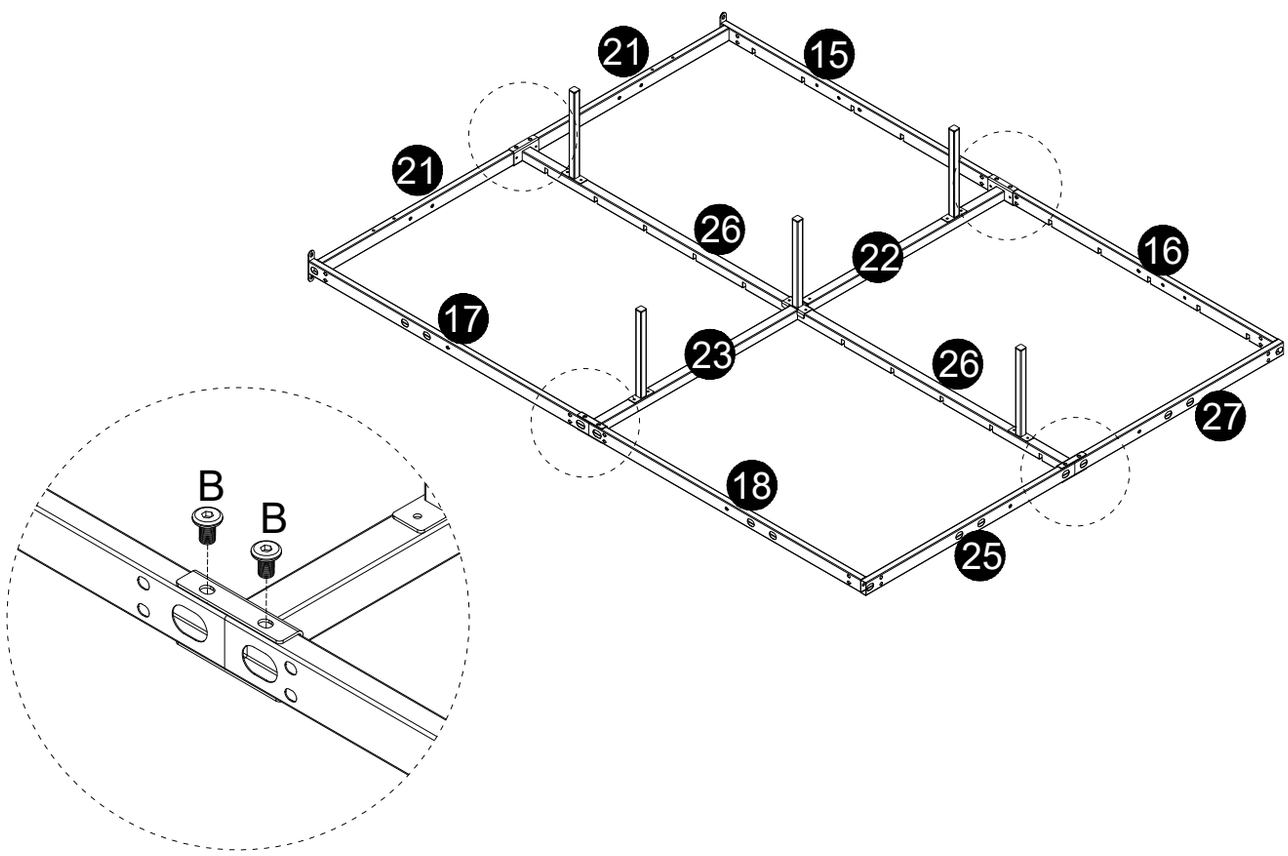

23

E		6*28mm	8pcs
I			4pcs
N		26.5cm	4pcs
Y		M6	1pc

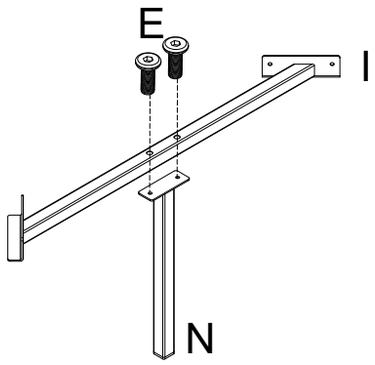

x4

24

E		6*28mm	4pcs
B		6*10mm	12pcs
Y		M6	1pc

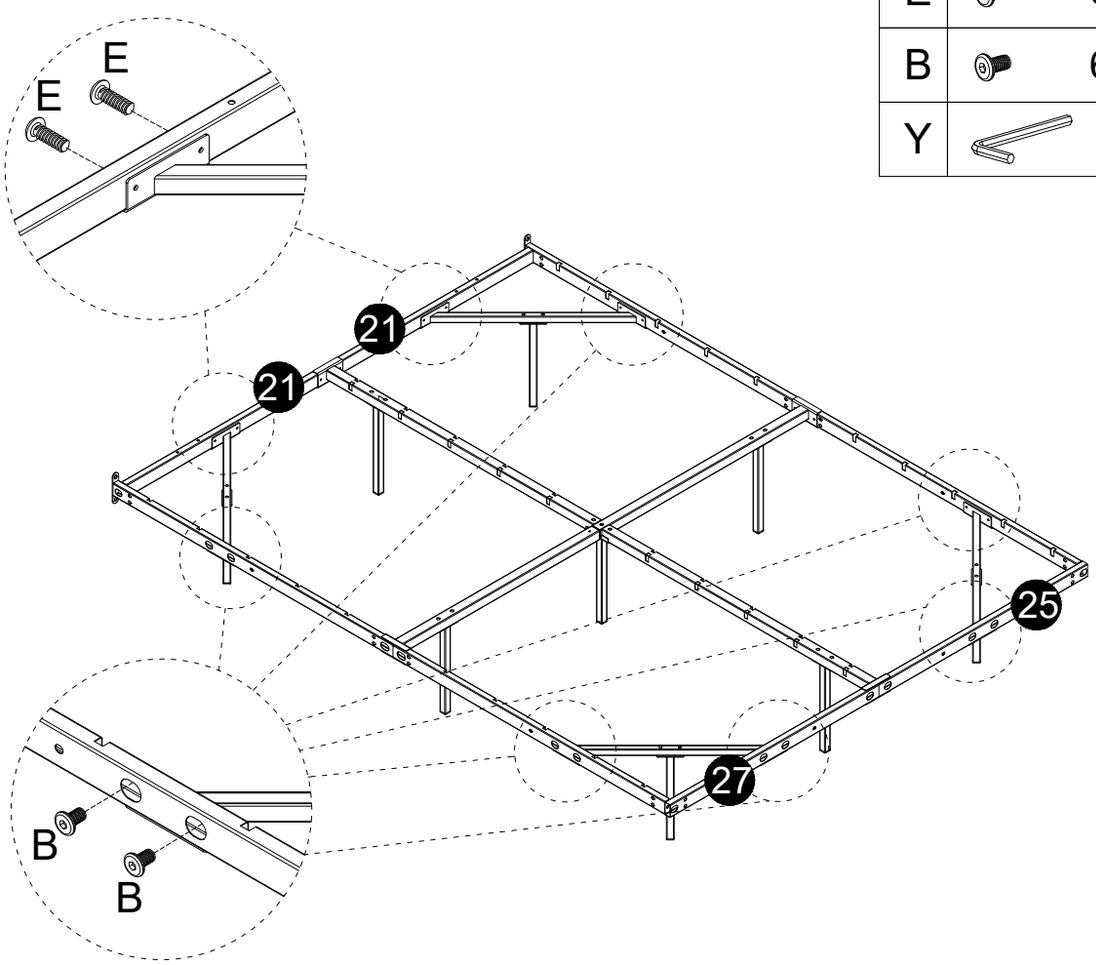

25

R		1pc

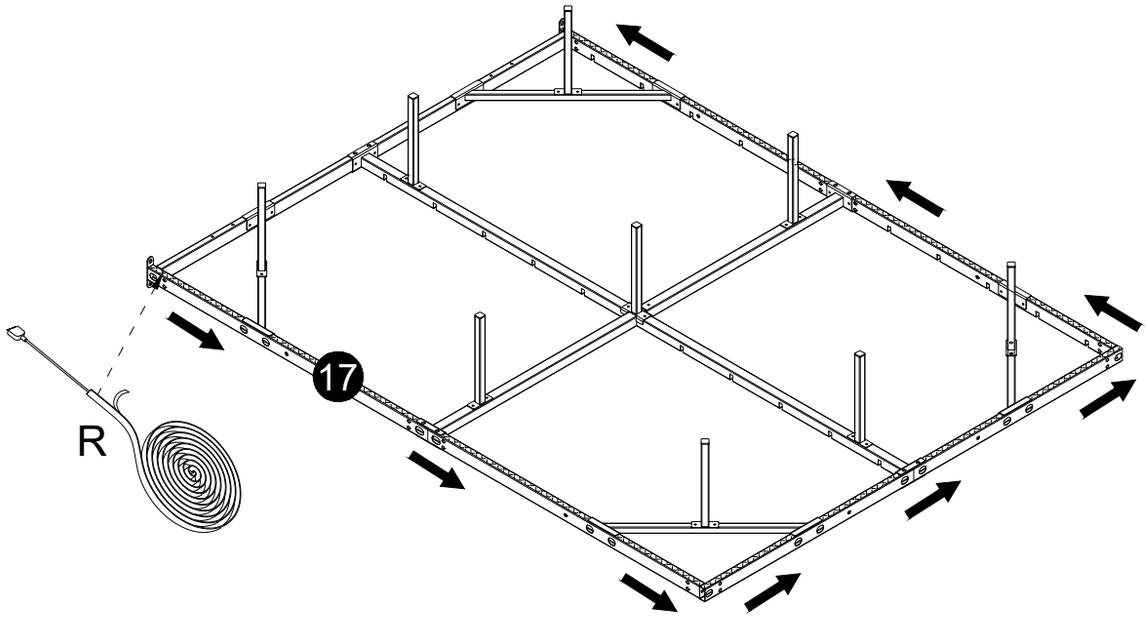

26

U		1pc

C		8*35mm	4pcs
K		M8	4pcs
H		M8	4pcs
V		M8	1pc

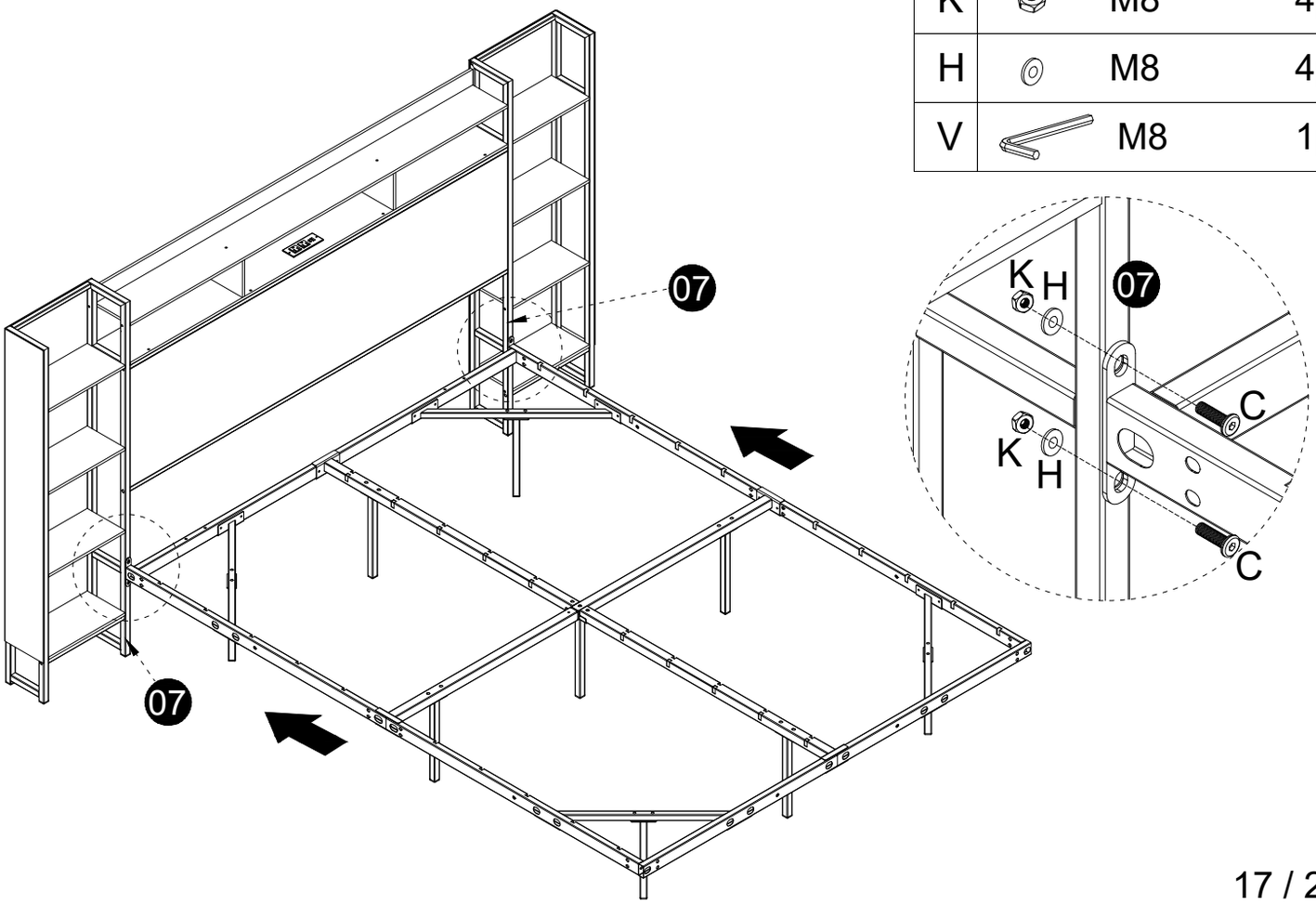

27

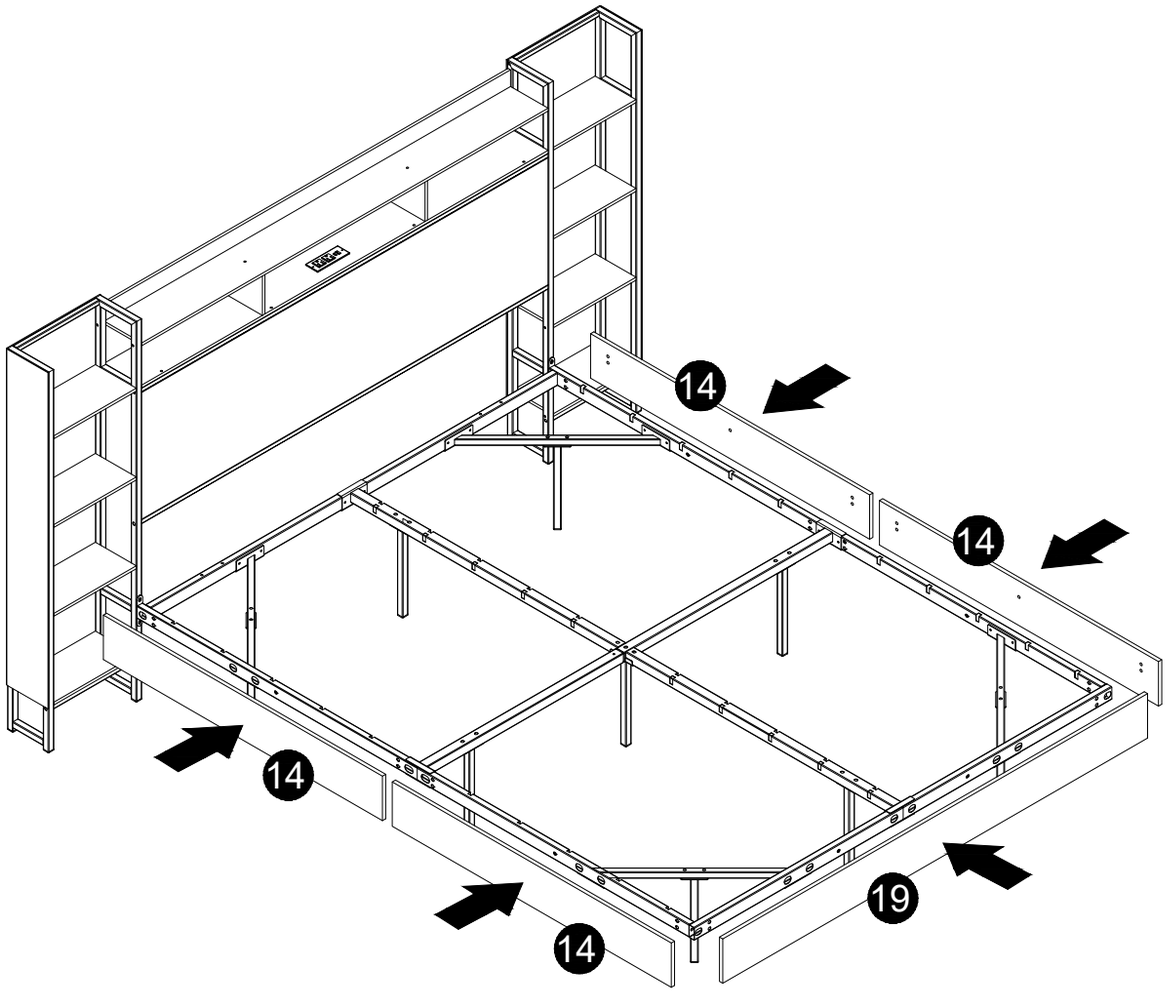

28

E		6*28mm	26pcs
Y		M6	1pc

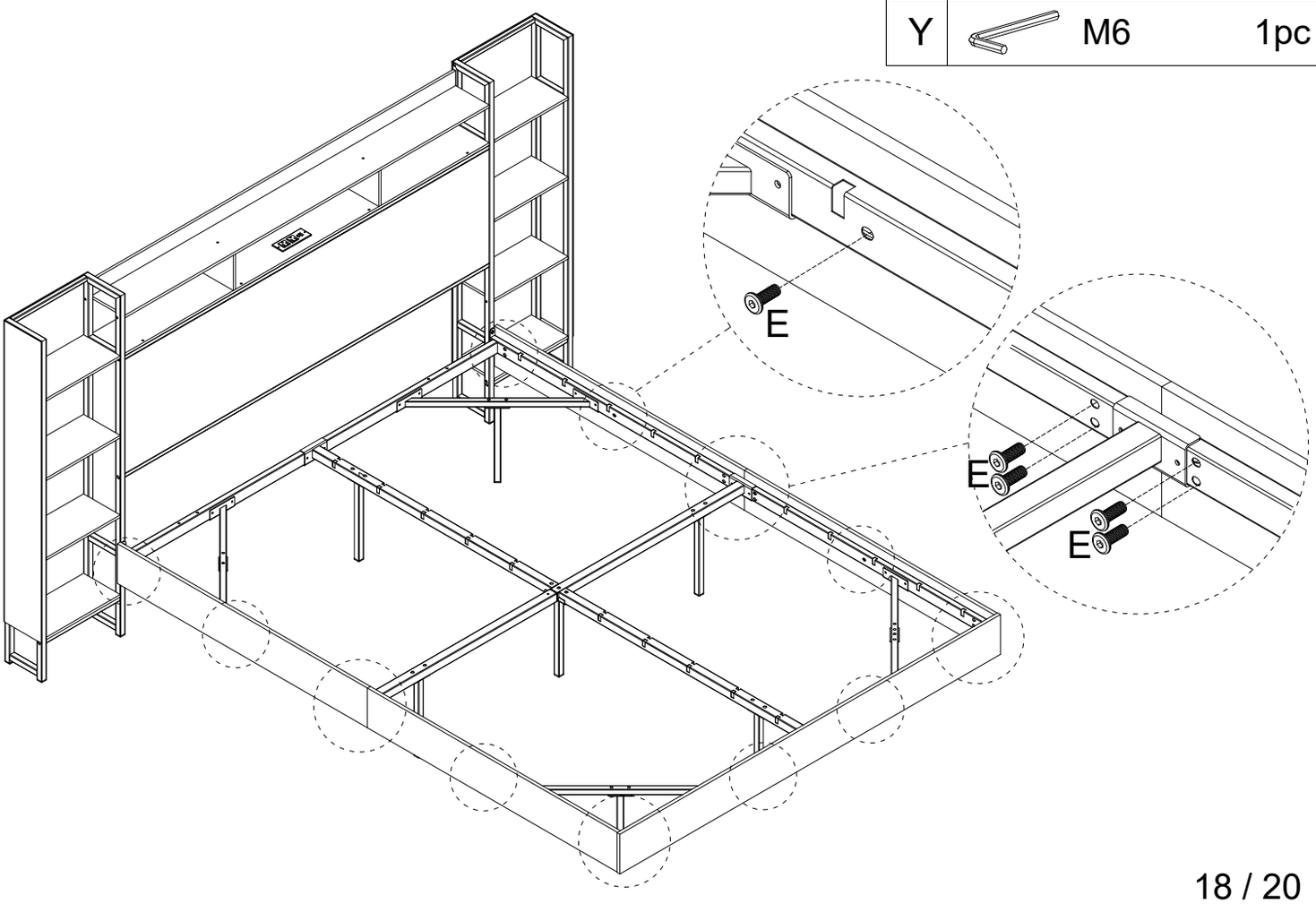

29

J		2pcs

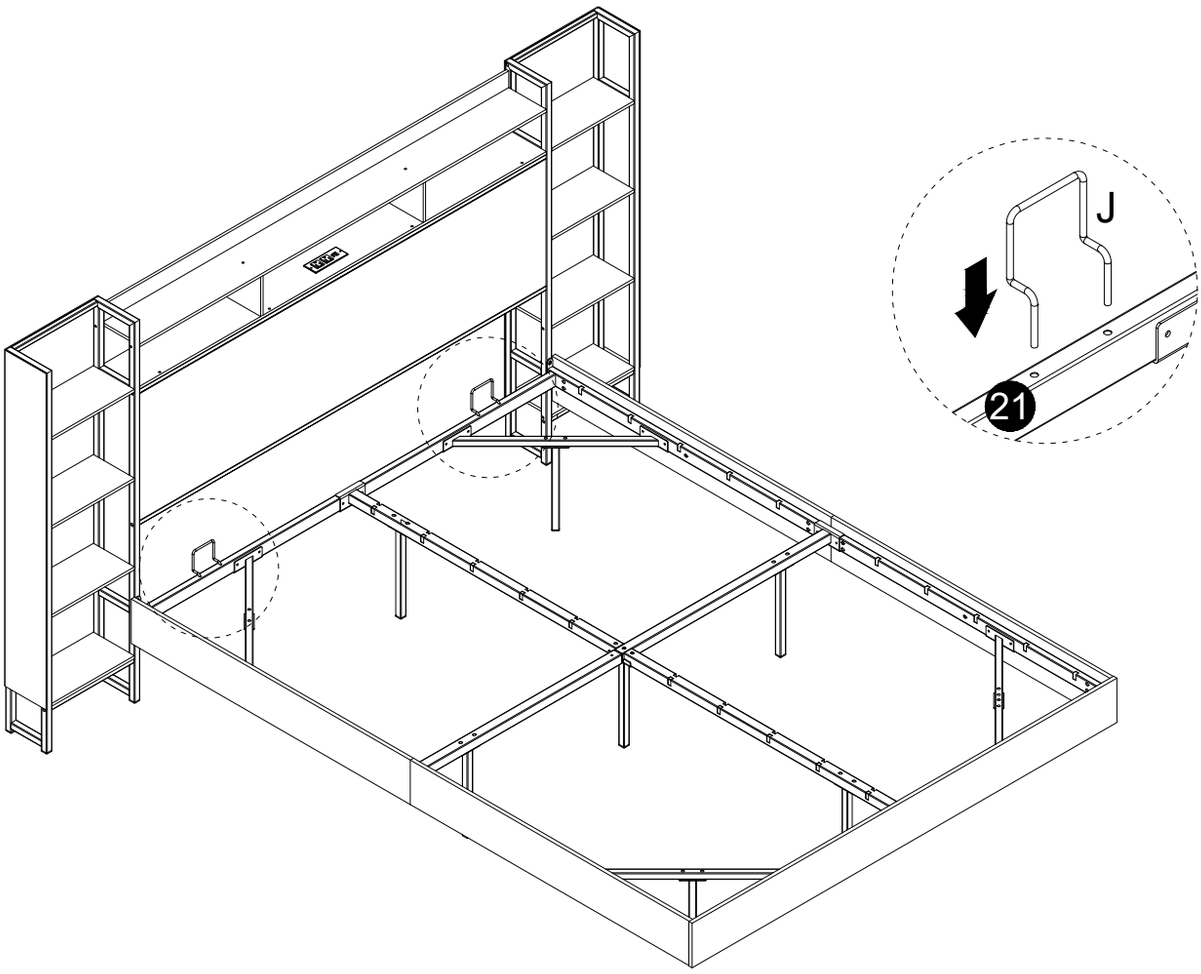

30

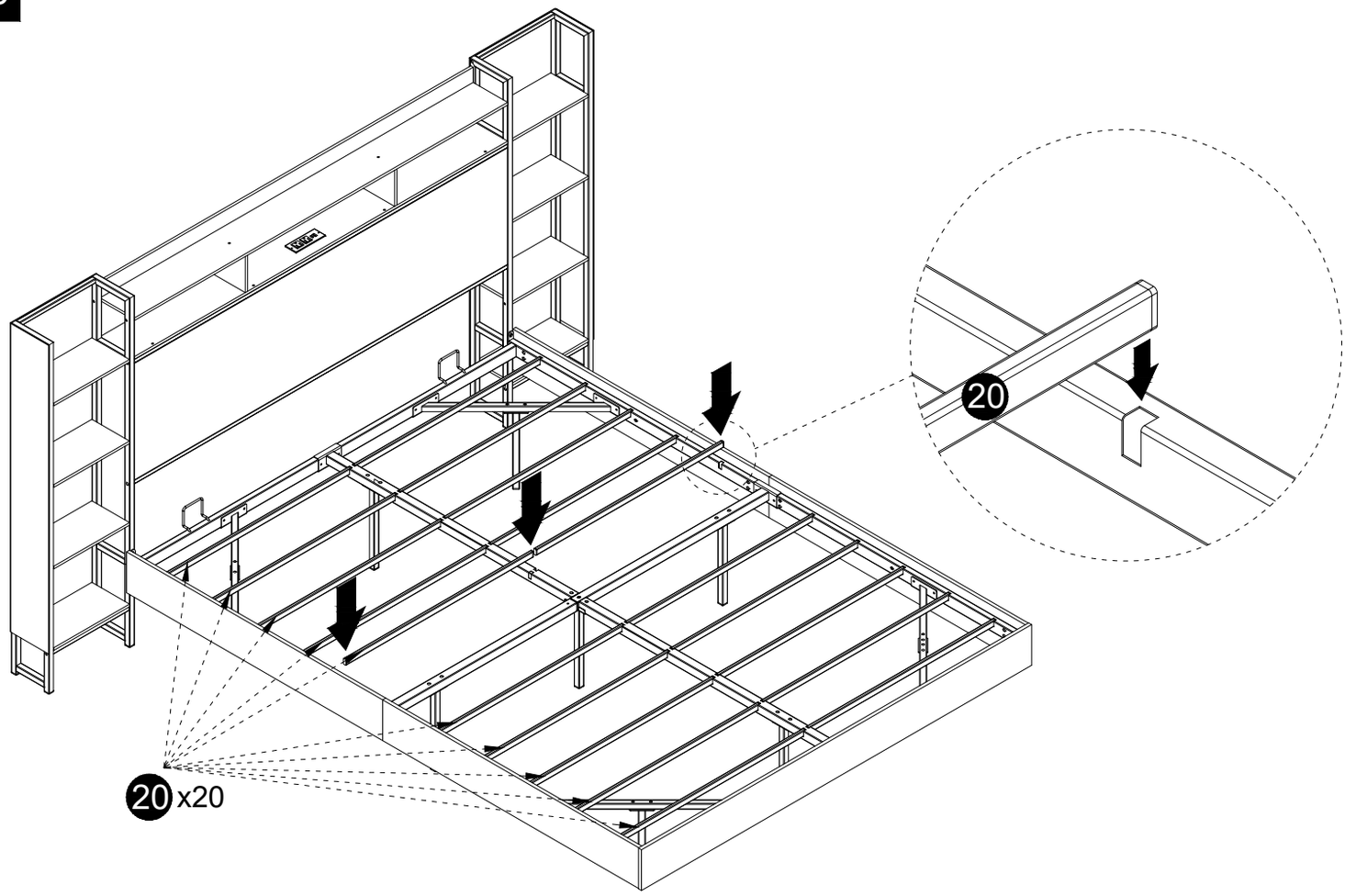

31

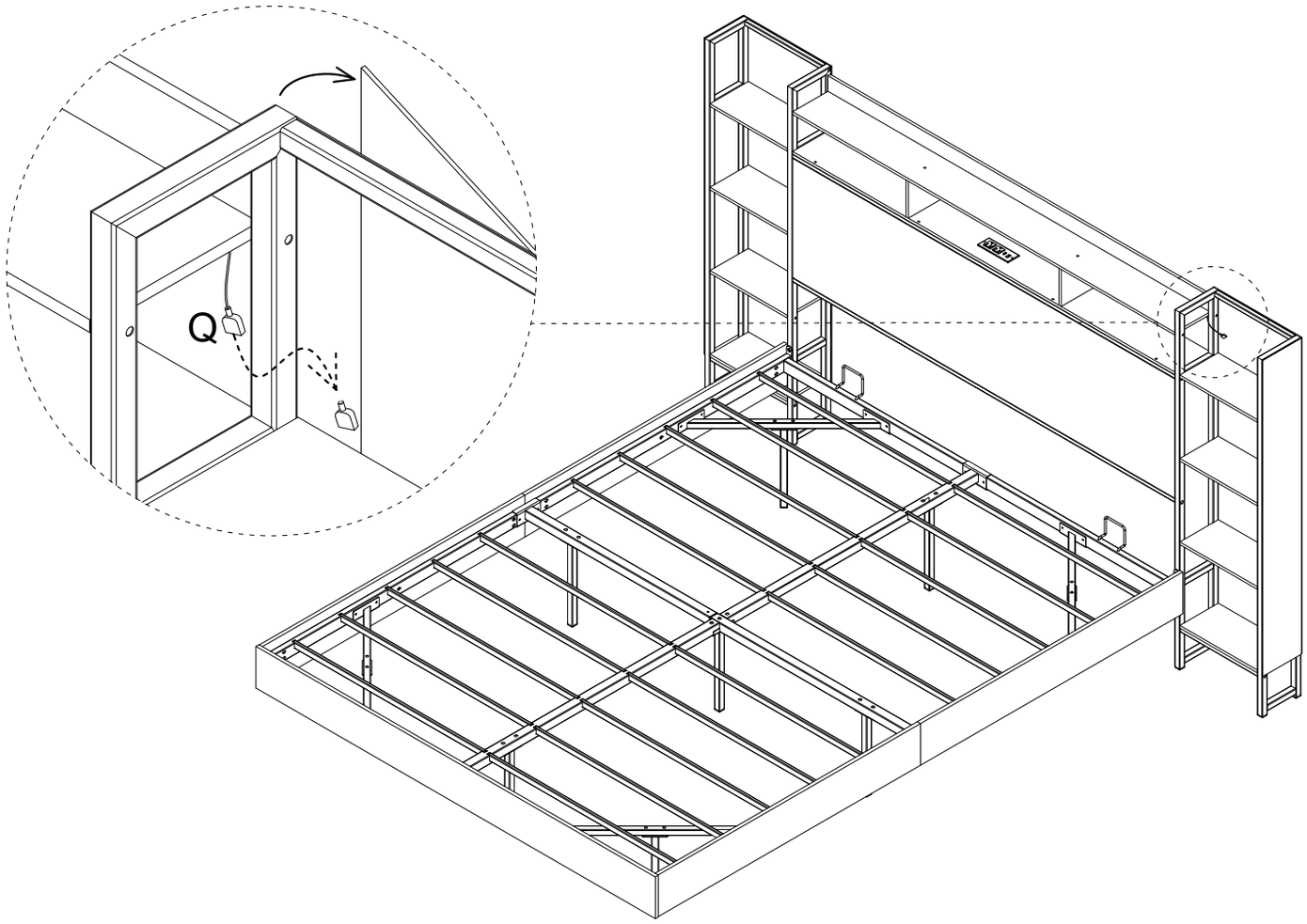

32
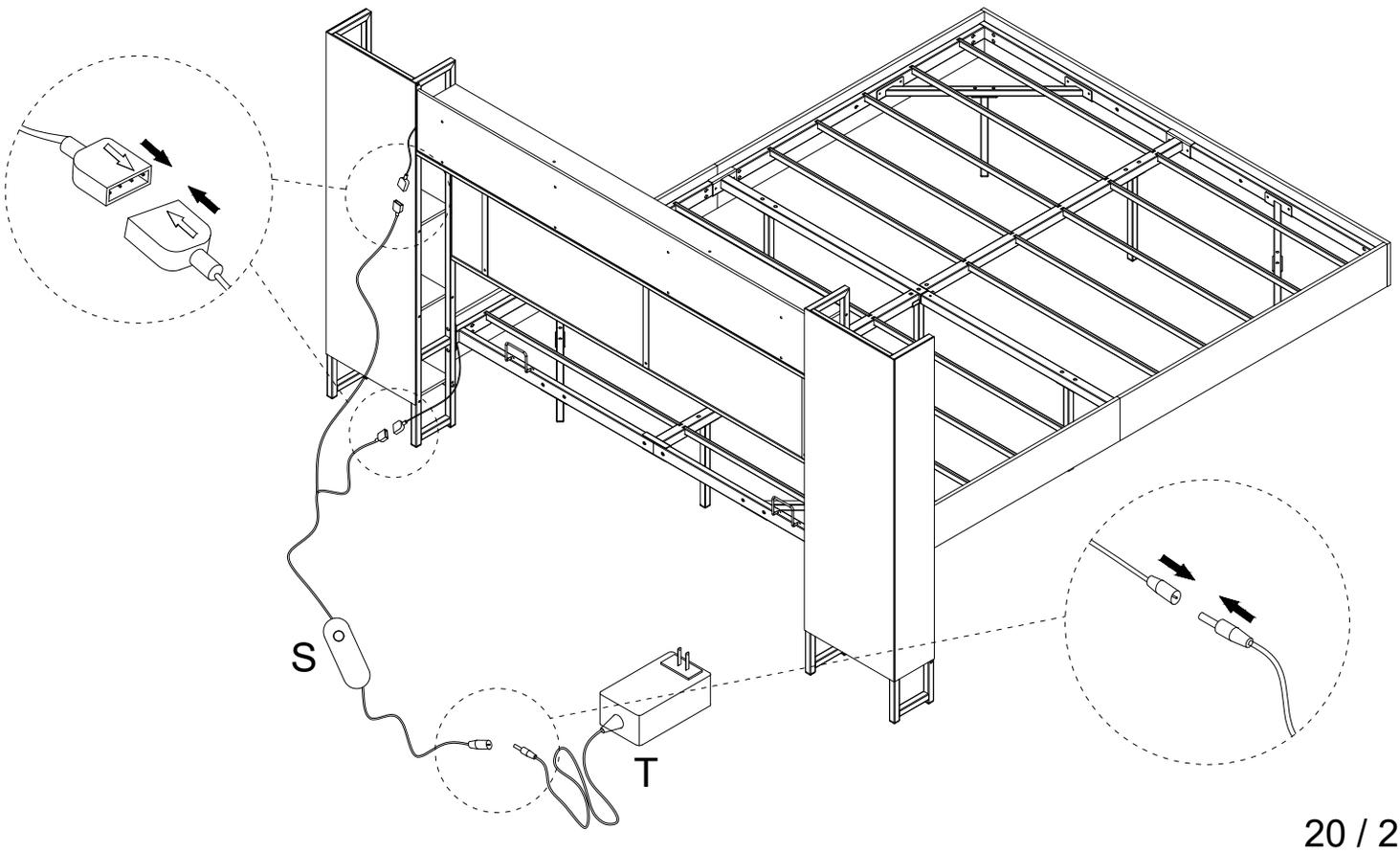
S		1pc
T		1pc