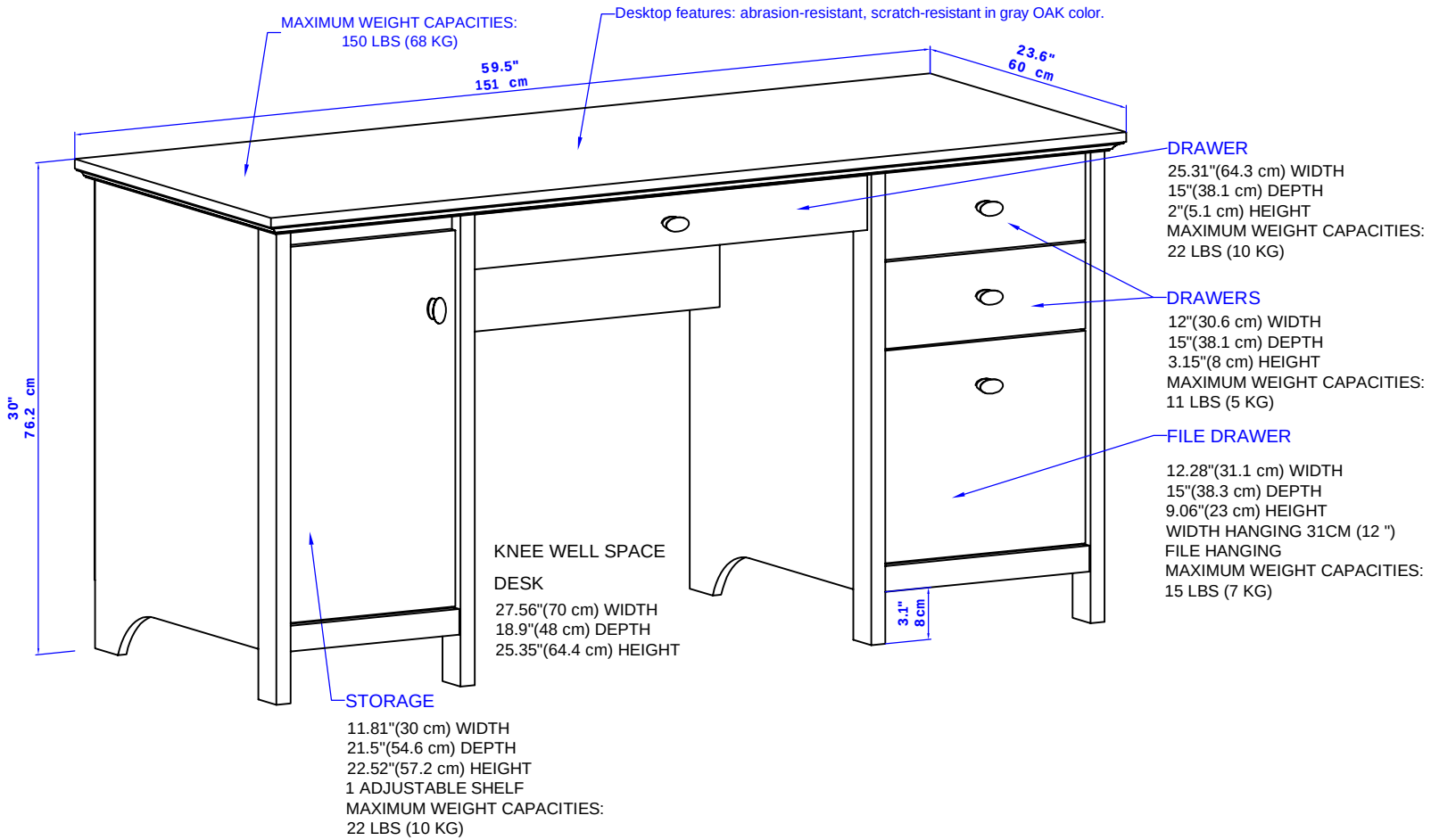

59.5"×23.6"×30"
151cm×60cm×76.2cm