5151#

Mobile TV cabinet

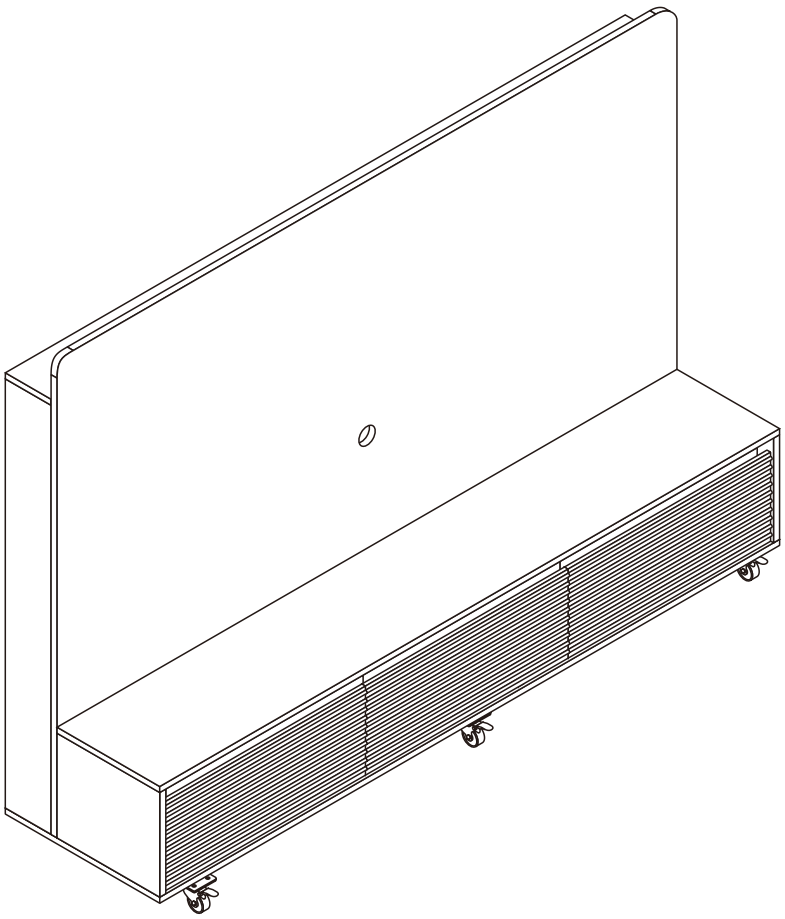

L1800*W450*H1200MM

2 Persons

5151#
Installation Video

Cabinet Hinge
Adjustment Video

Drawer Glide
Adjustment Video

Installation Instructions

Notes: Don't tighten screws completely at first, just in case parts were assembled wrongly and need disassemble. Tighten screws at last when all parts are put together.

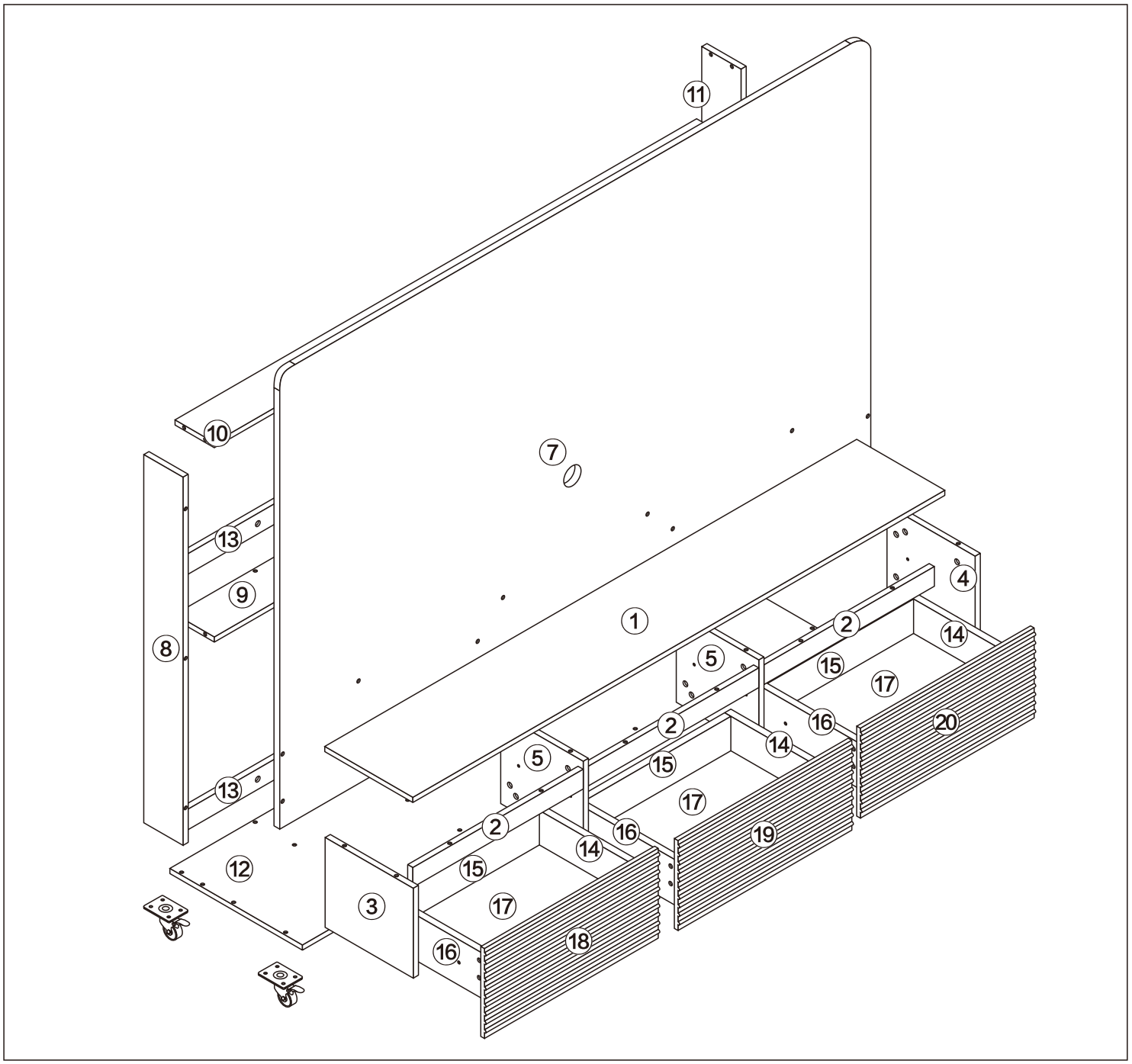

Disassembly and installation of accessories

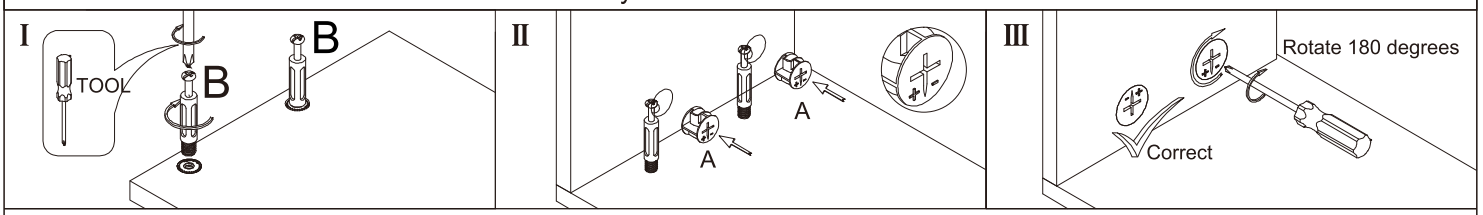

A 84PCS	B 84PCS	D 48PCS	E 12PCS	F 6PCS	G 6PCS	H 1PCS	
	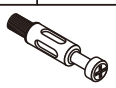				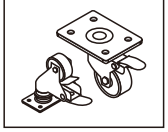		Tools Recommended
15*10mm	6*28mm	3.5*14mm	3.5*40mm				

1

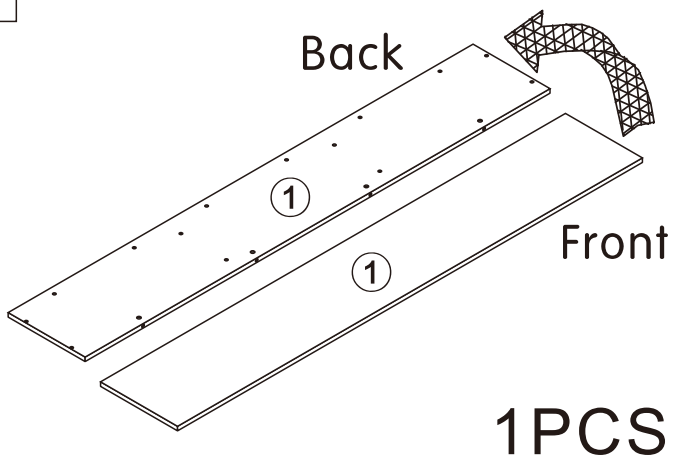

1PCS

2

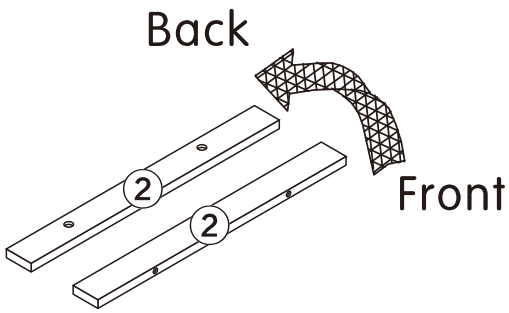

3PCS

3

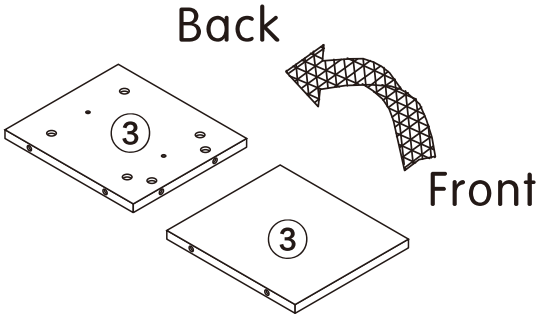

1PCS

4

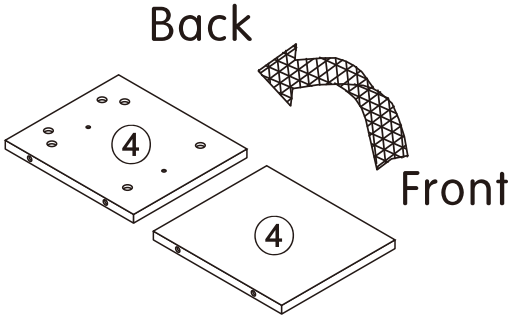

1PCS

5

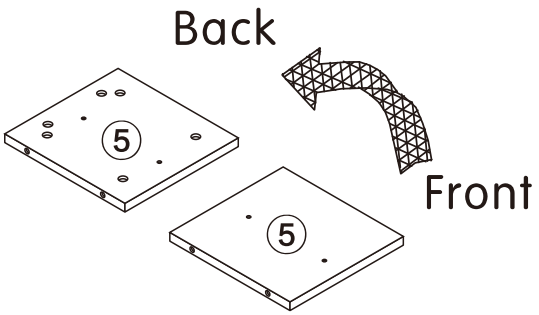

2PCS

7

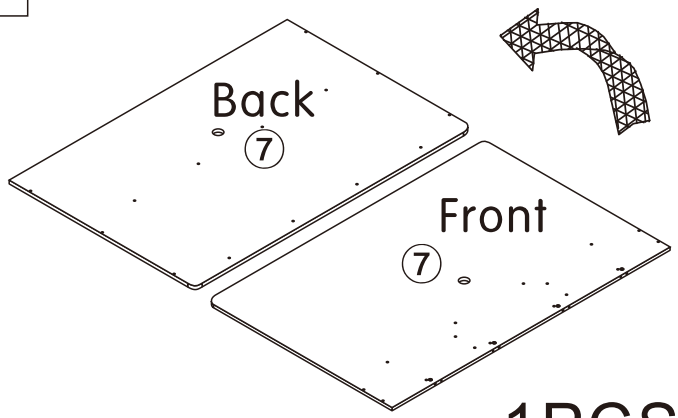

1PCS

8

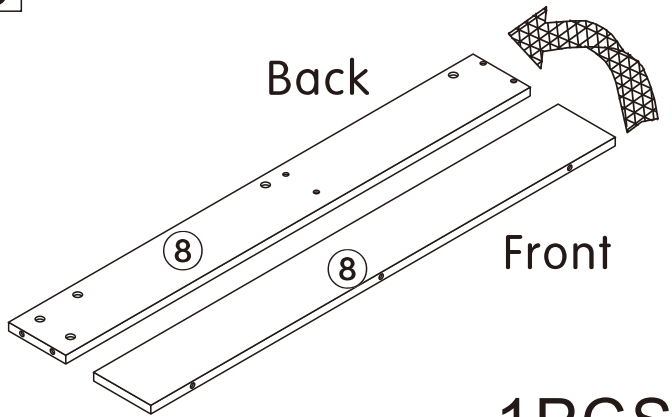

1PCS

9

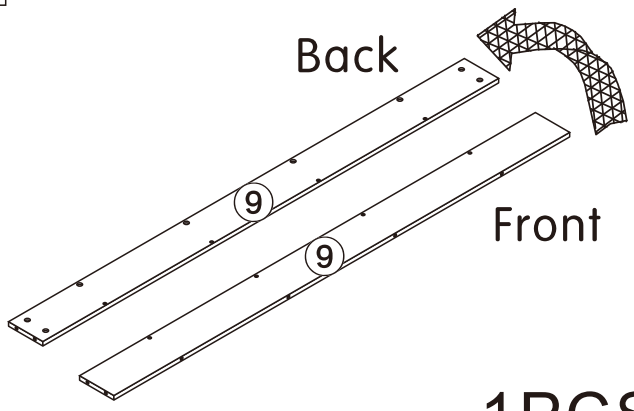

1PCS

10

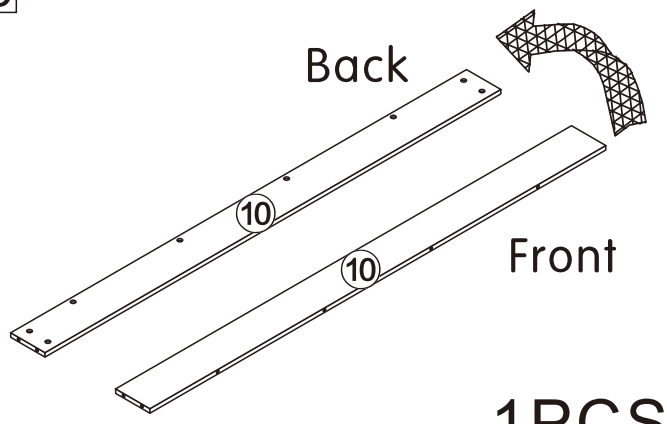

1PCS

11

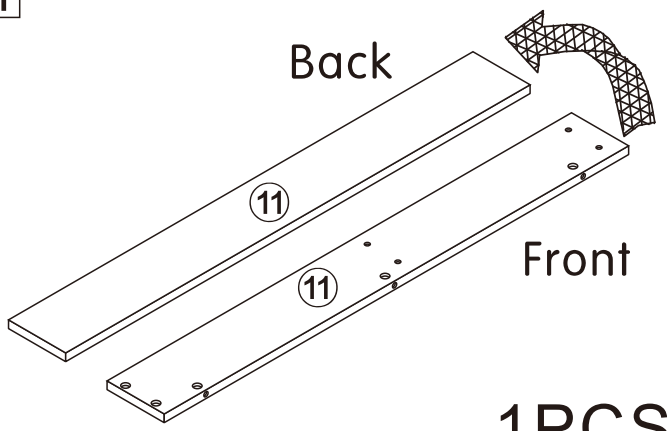

1PCS

12

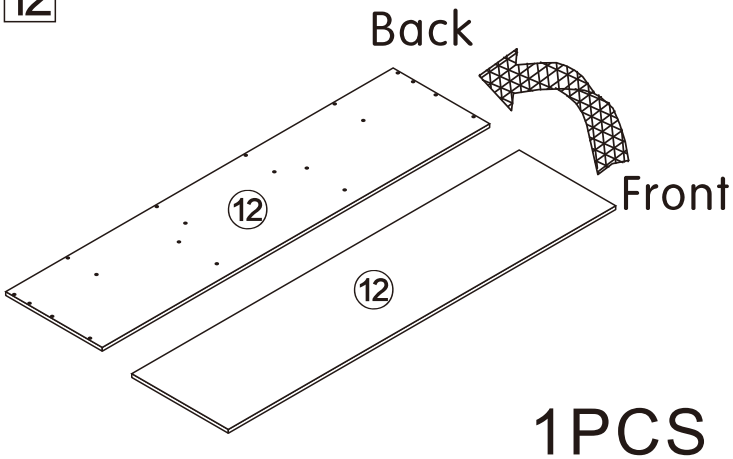

1PCS

13

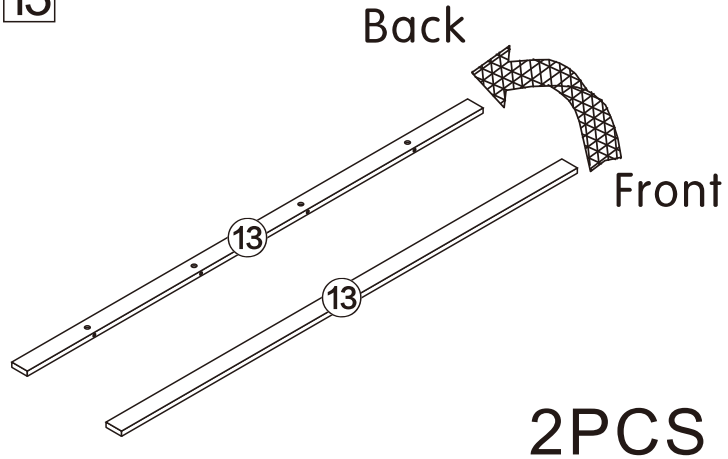

2PCS

14

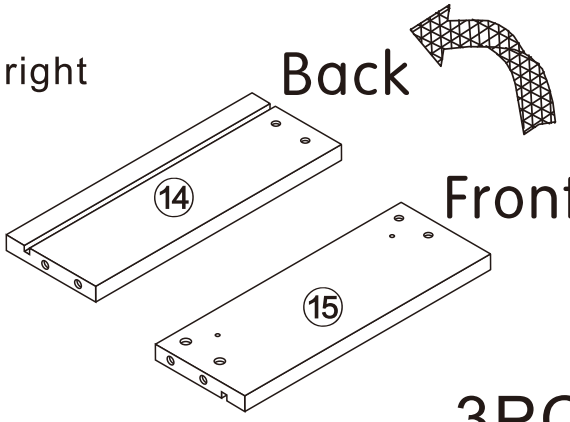

3PCS

15

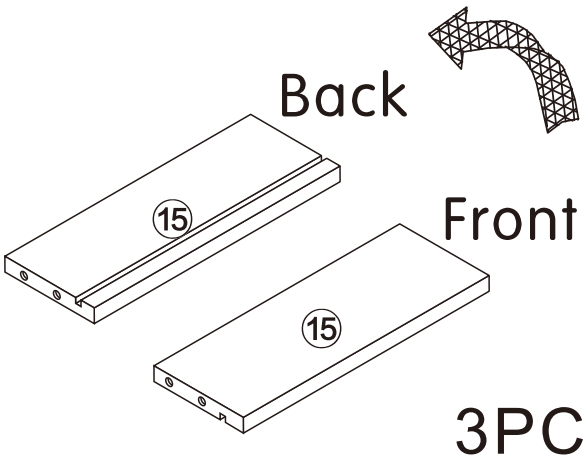

3PCS

16

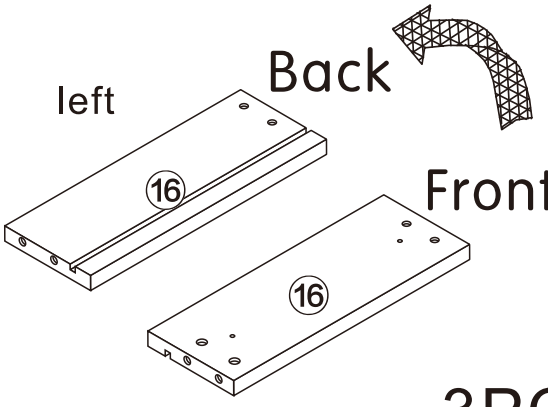

3PCS

17

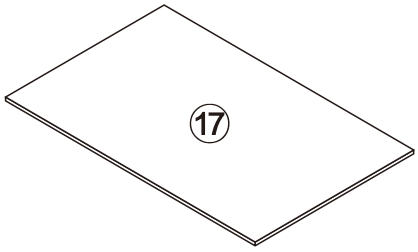

3PCS

18

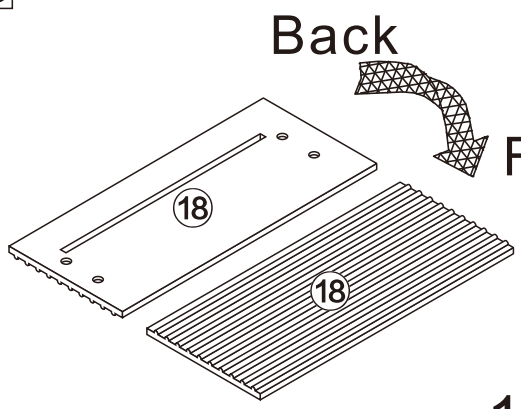

1PCS

19

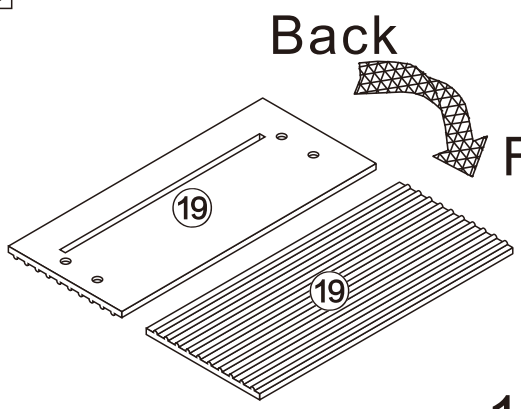

1PCS

20

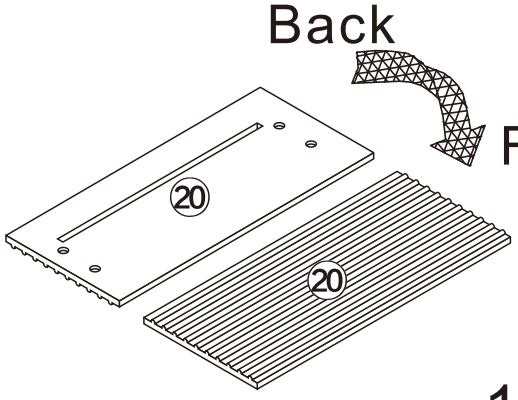

1PCS

1

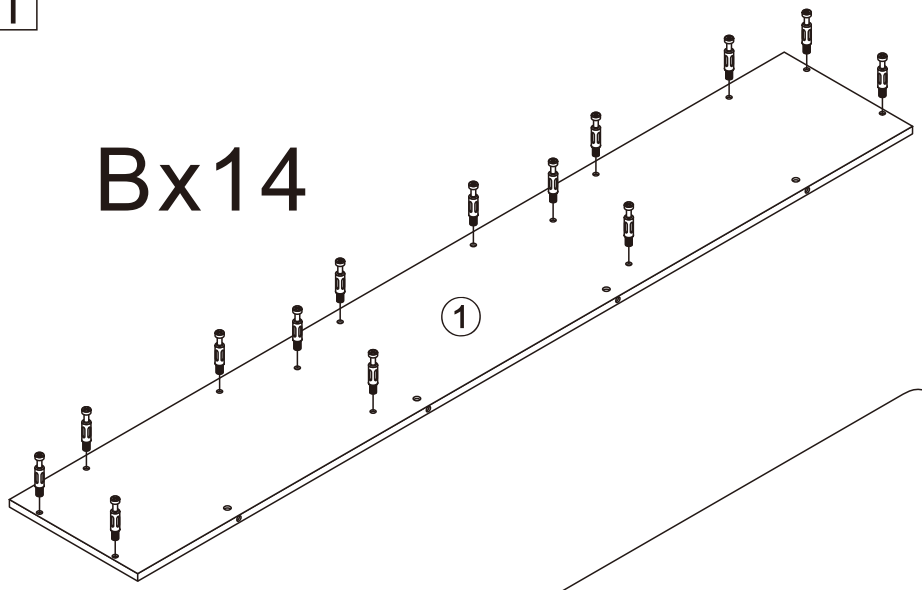

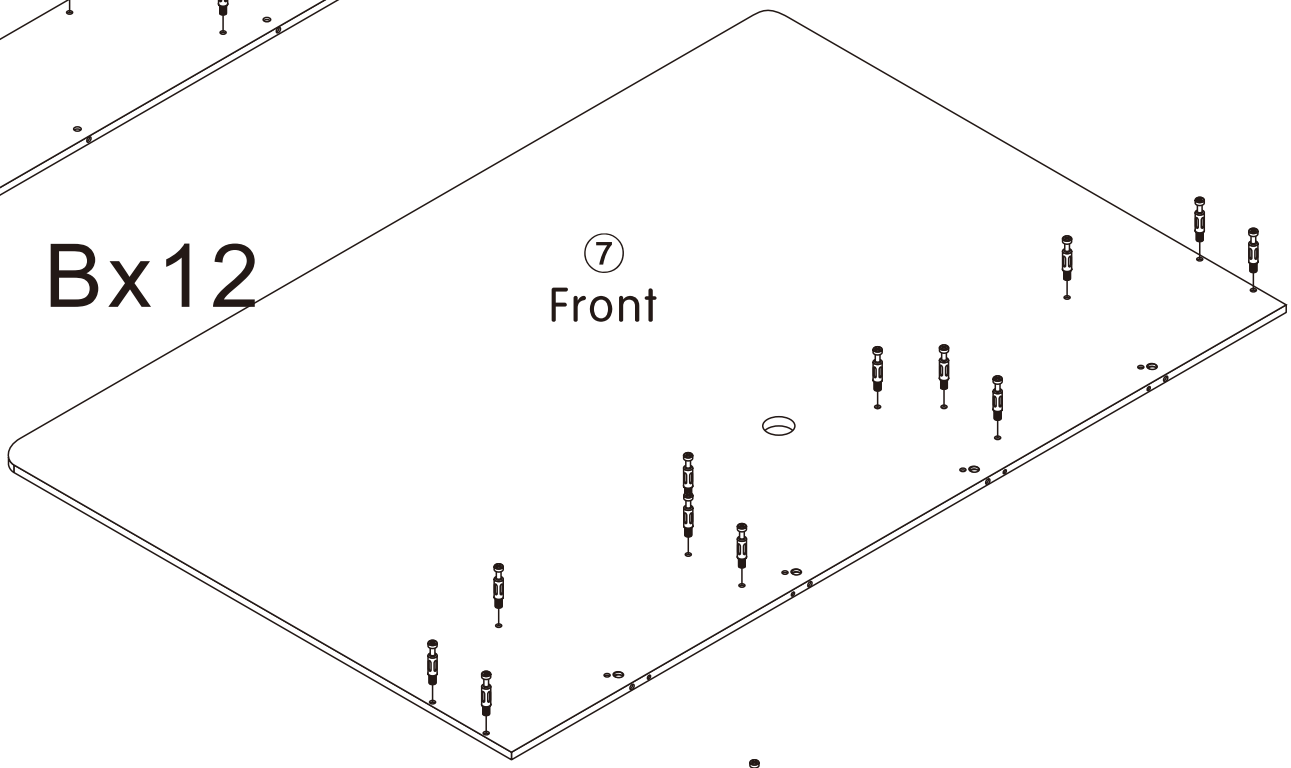

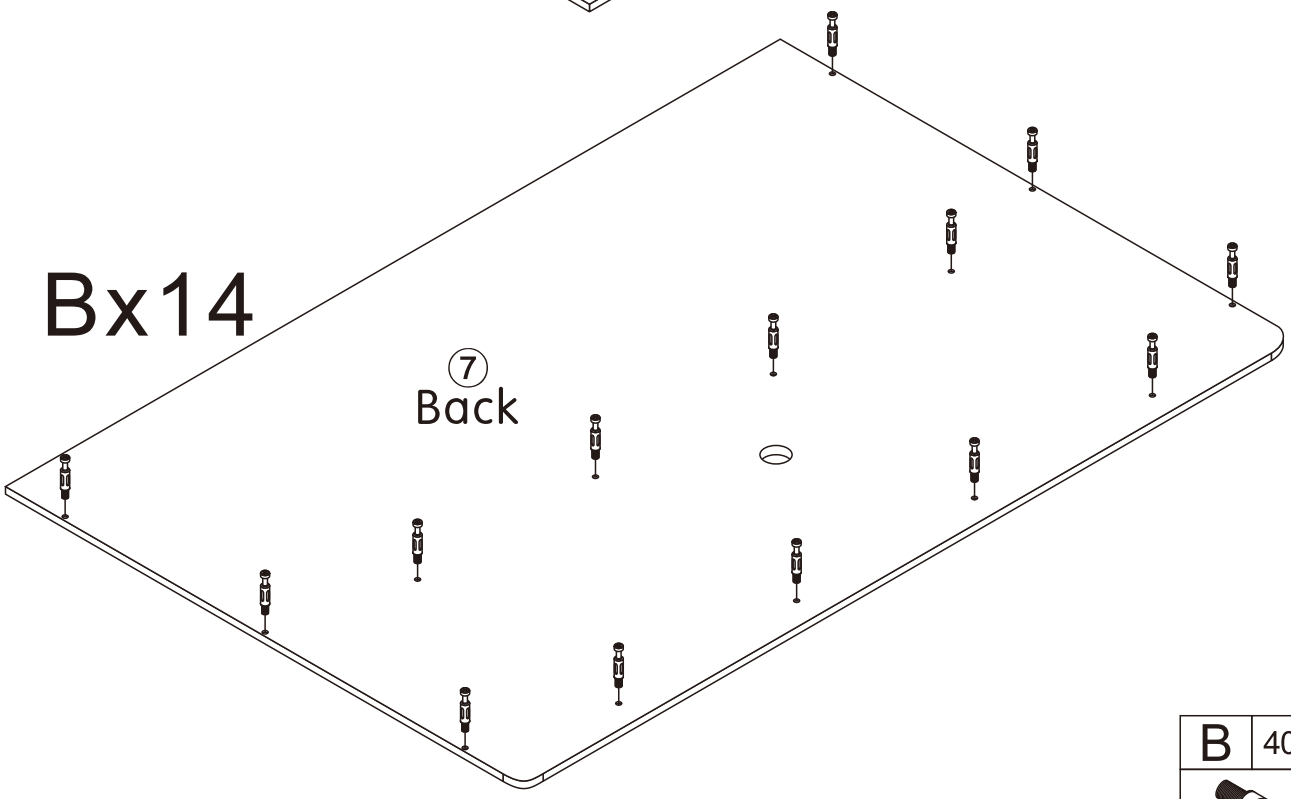

B	40PCS
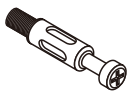	
6*28mm	

1

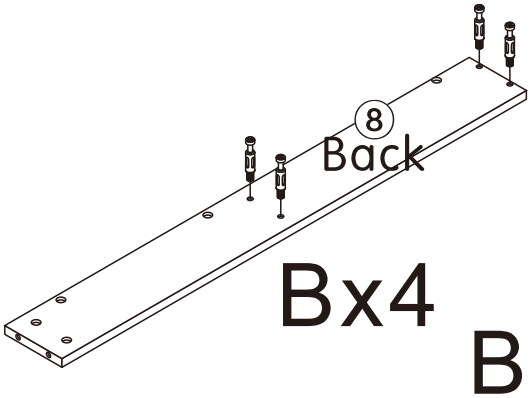

Bx4

Bx4

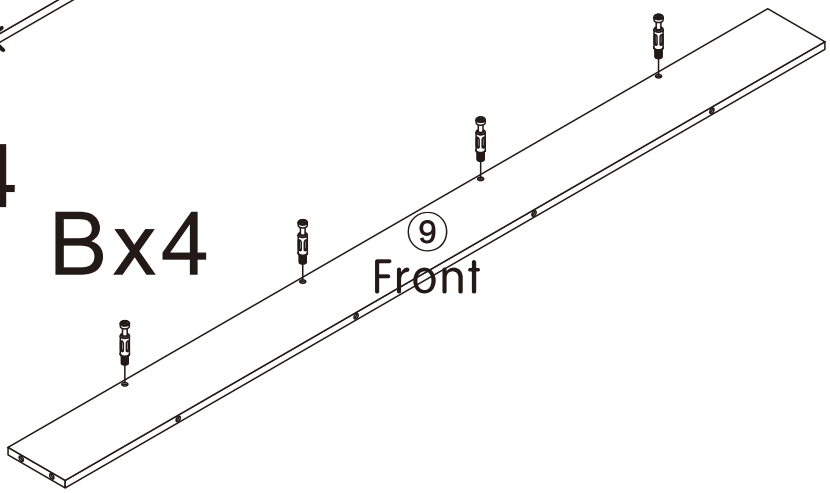

Bx4
Front

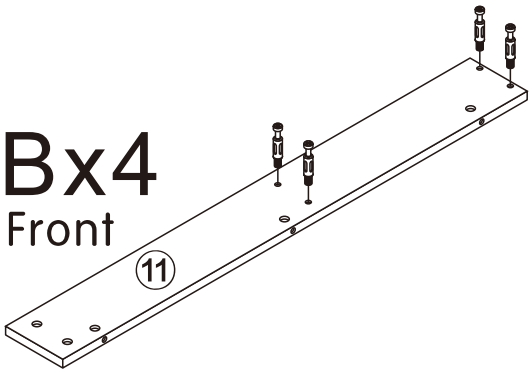

Bx20

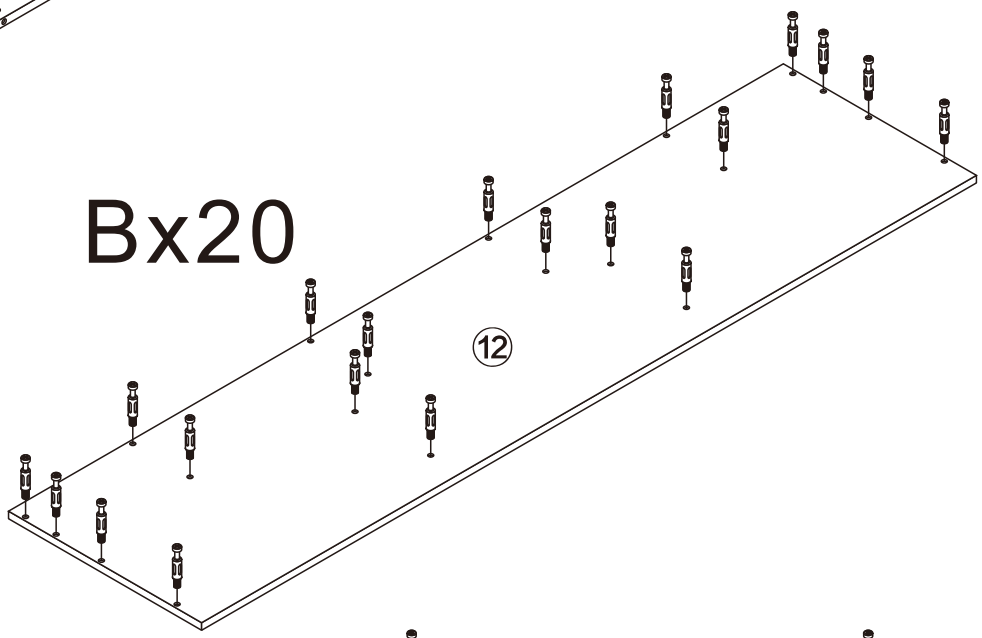

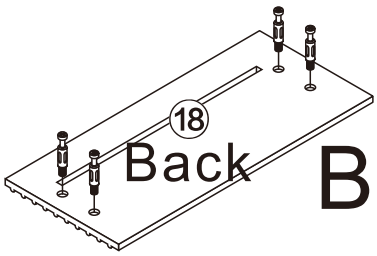

Bx4

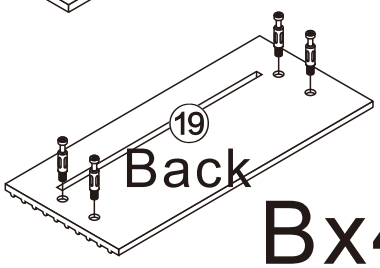

Bx4

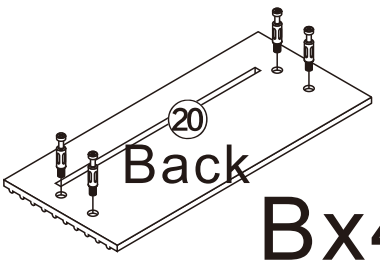

Bx4

B	44PCS
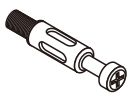	
6*28mm	

2

Fx6

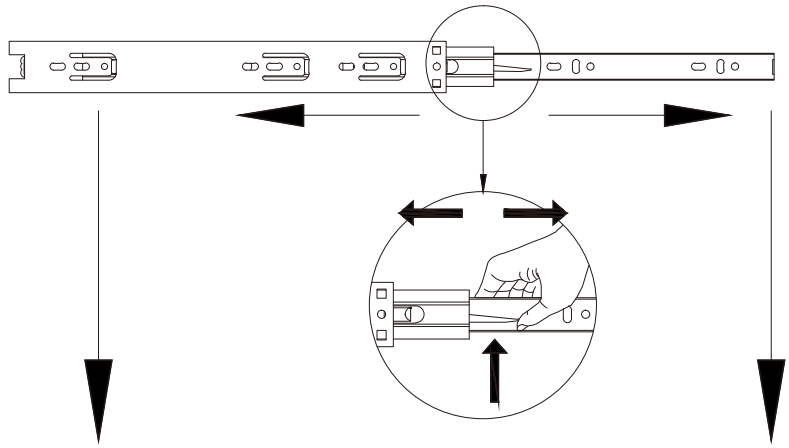

F_1



G_2



F	6PCS
	
Three-section Rail	

3

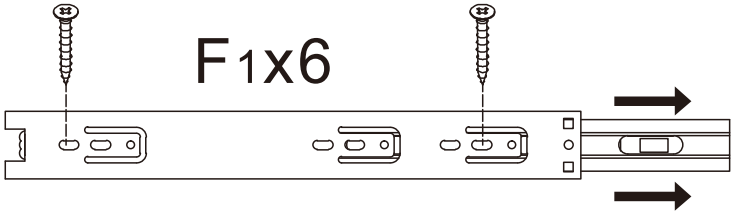

F_1X6

DX2X6

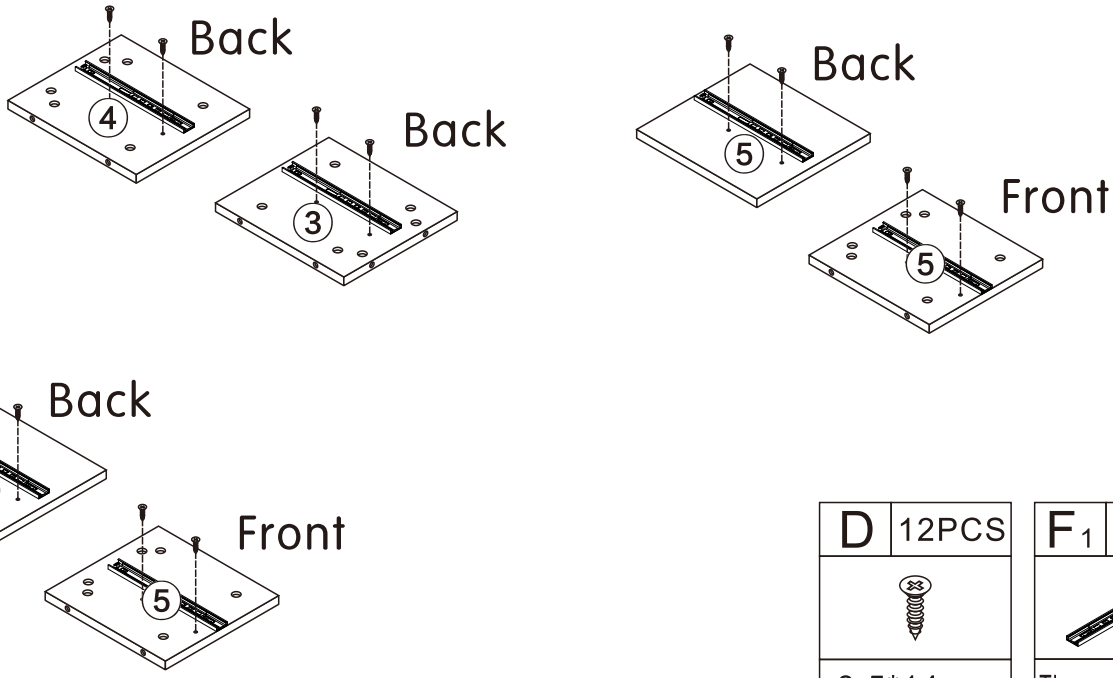

D	12PCS
3.5*14mm	

F_1	6PCS
	
Three-section Rail	

4

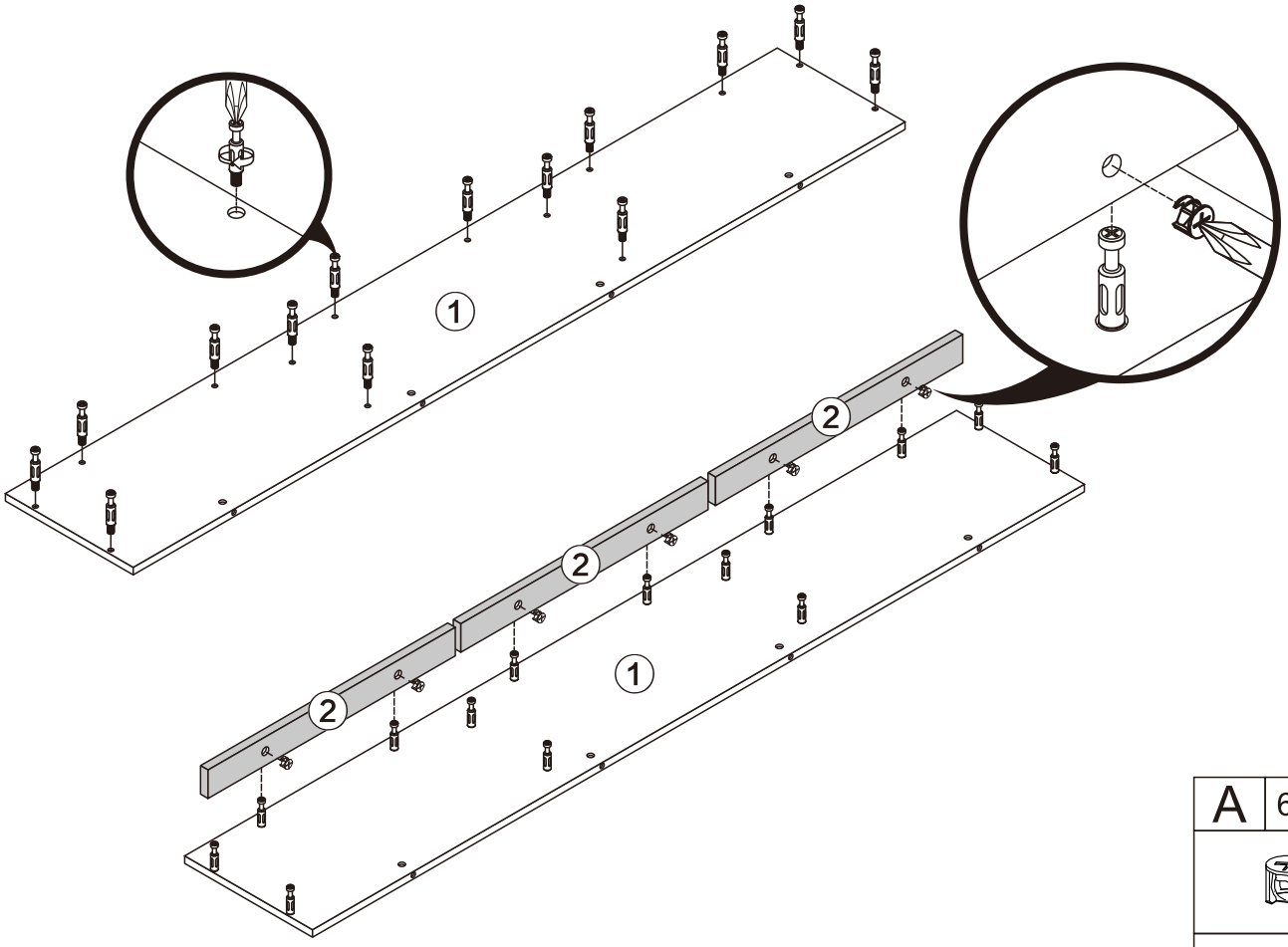

A	6PCS
	
15*10mm	

5

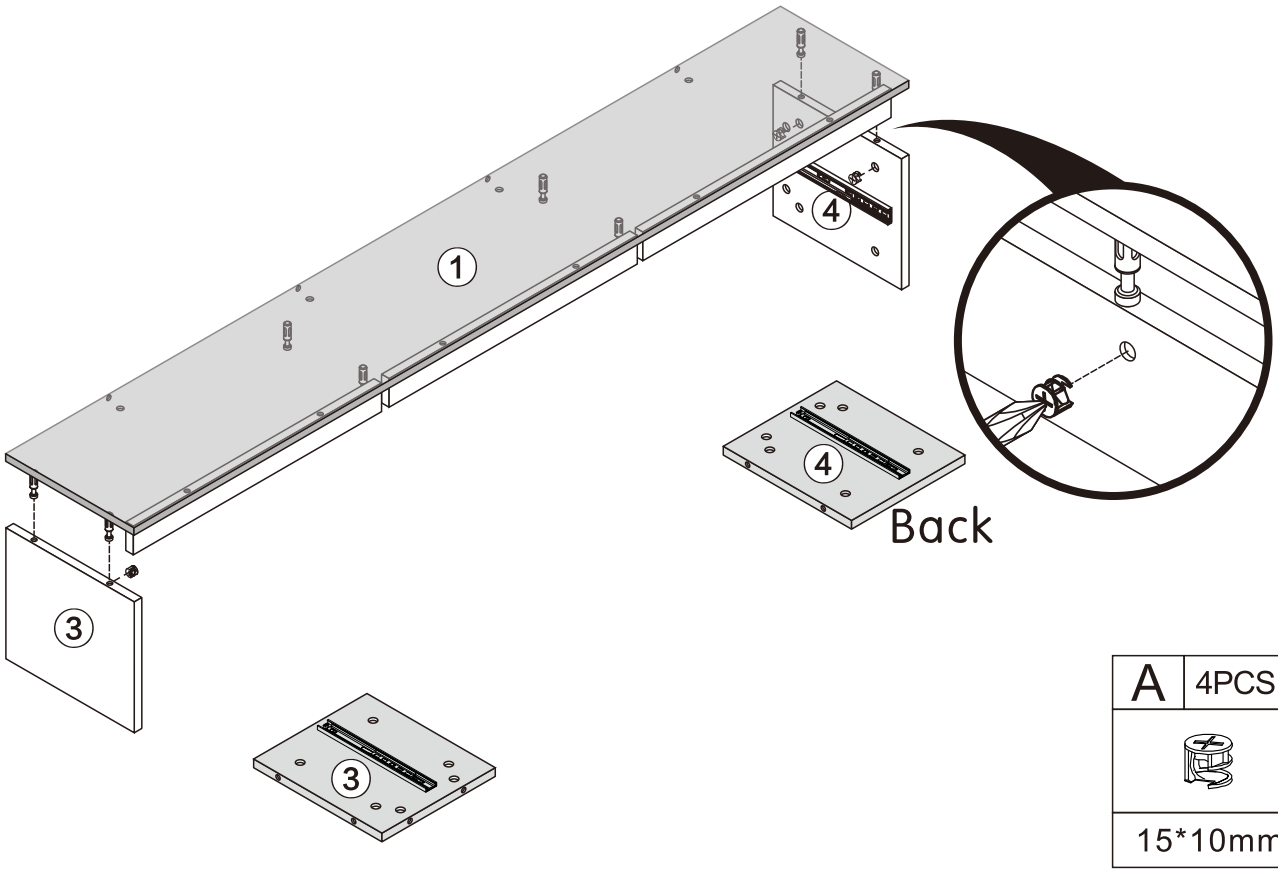

A	4PCS
15*10mm	

6

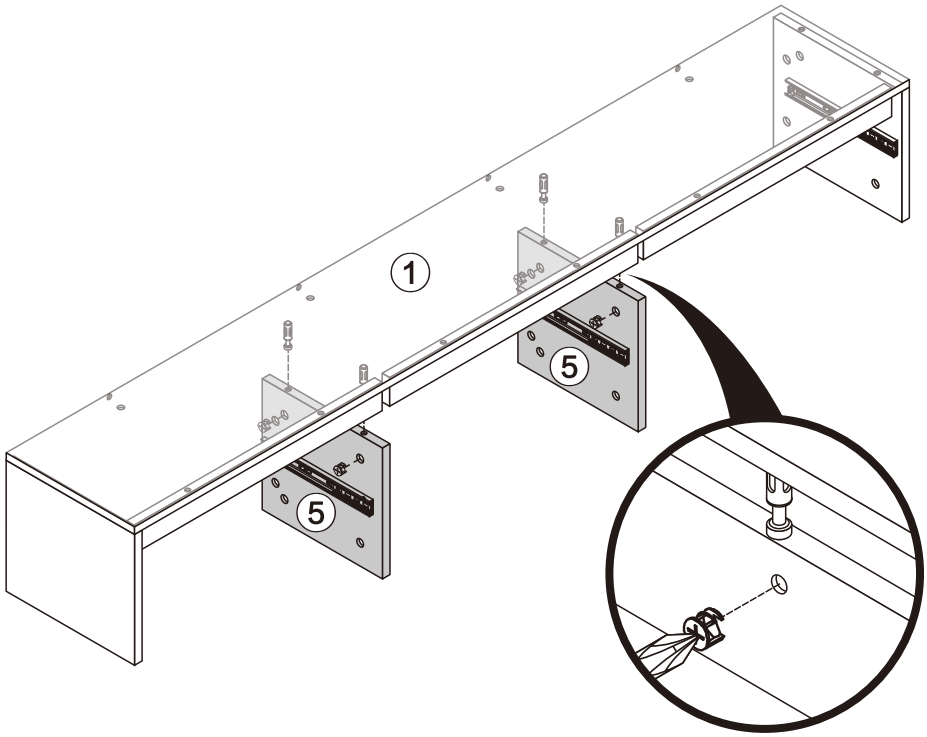

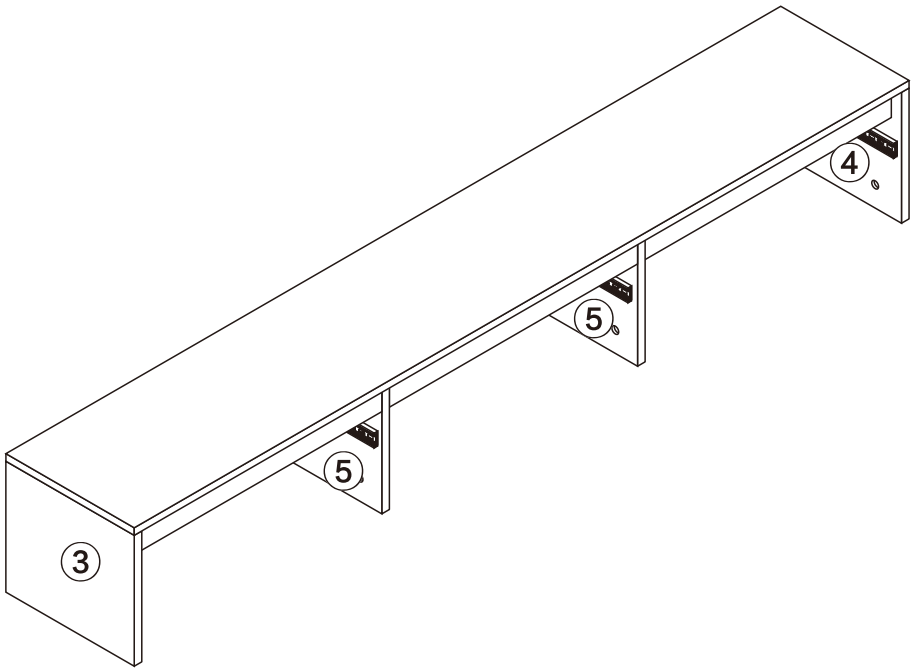

A	4PCS
	
15*10mm	

7

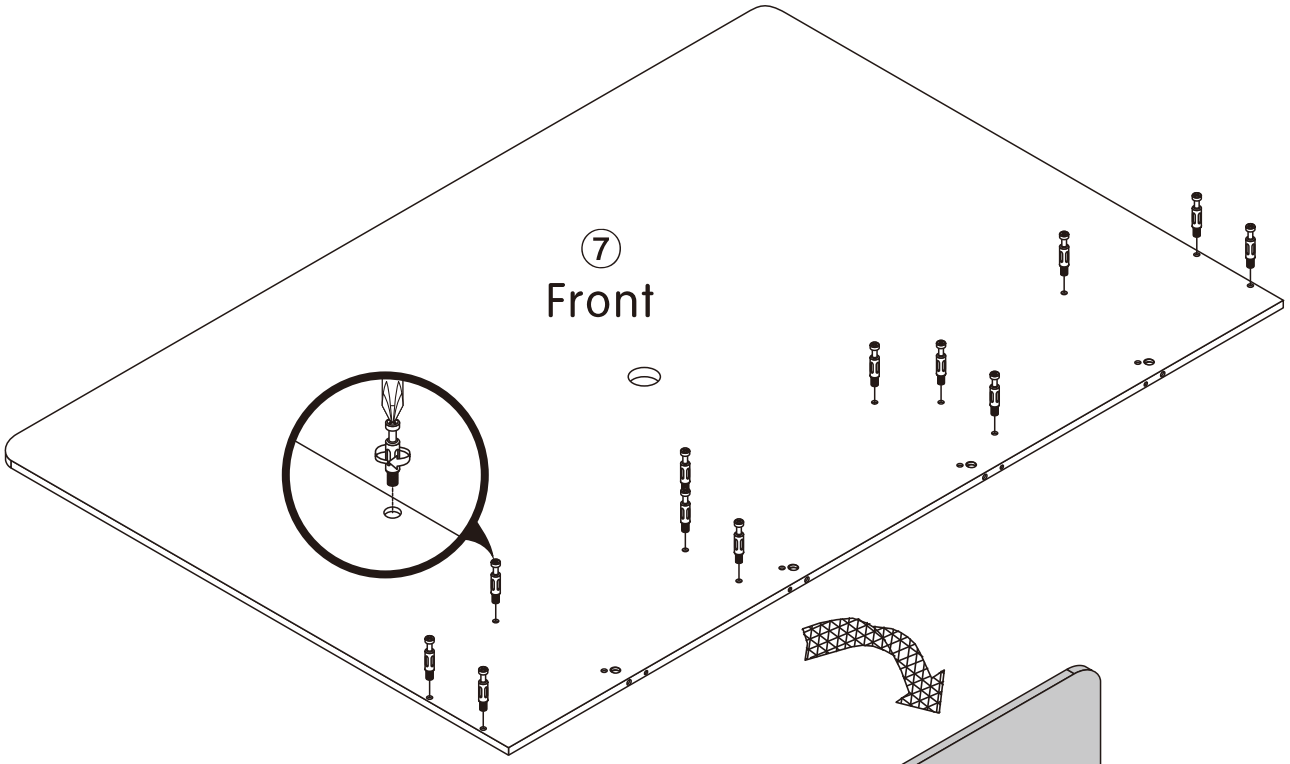

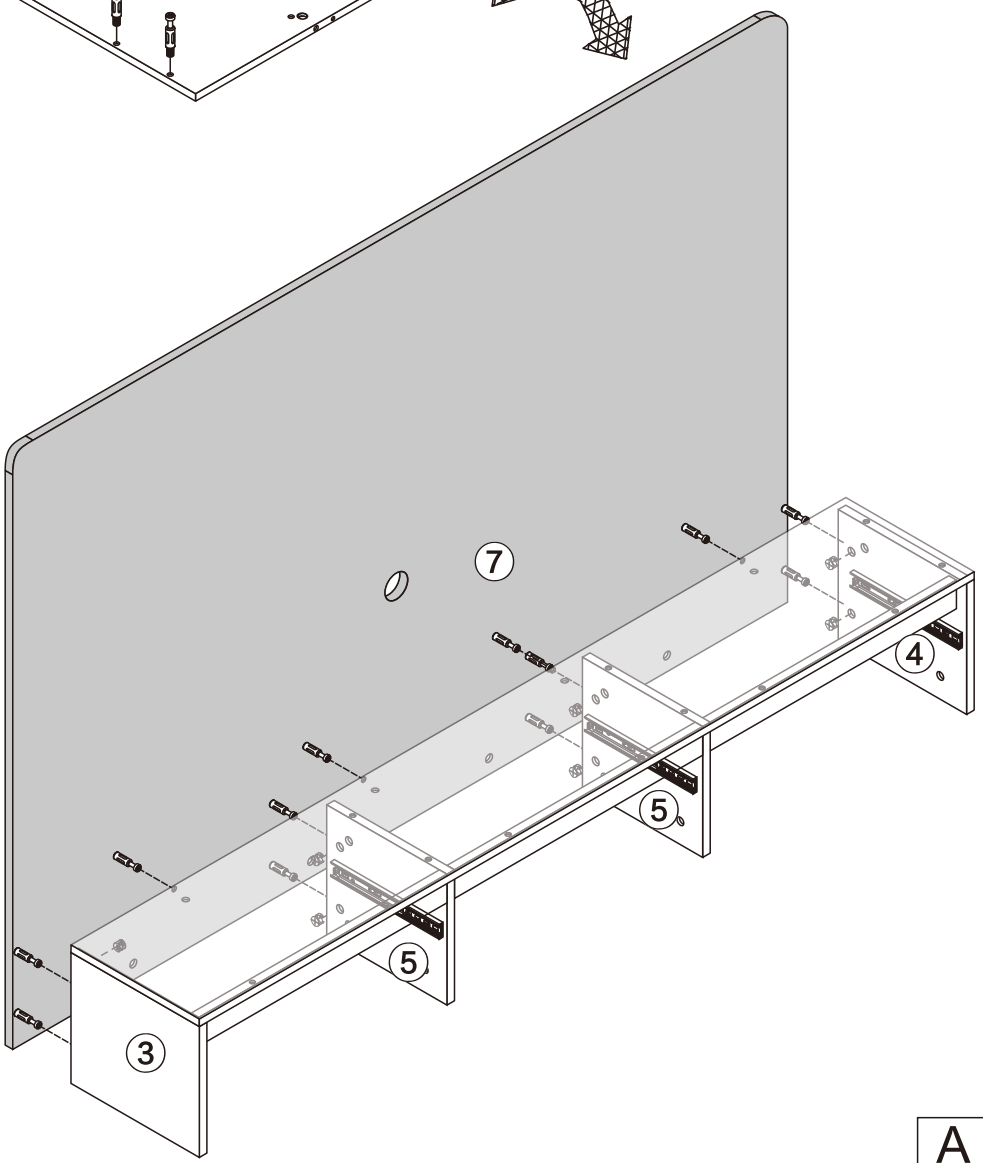

A	12PCS
	
15*10mm	

8

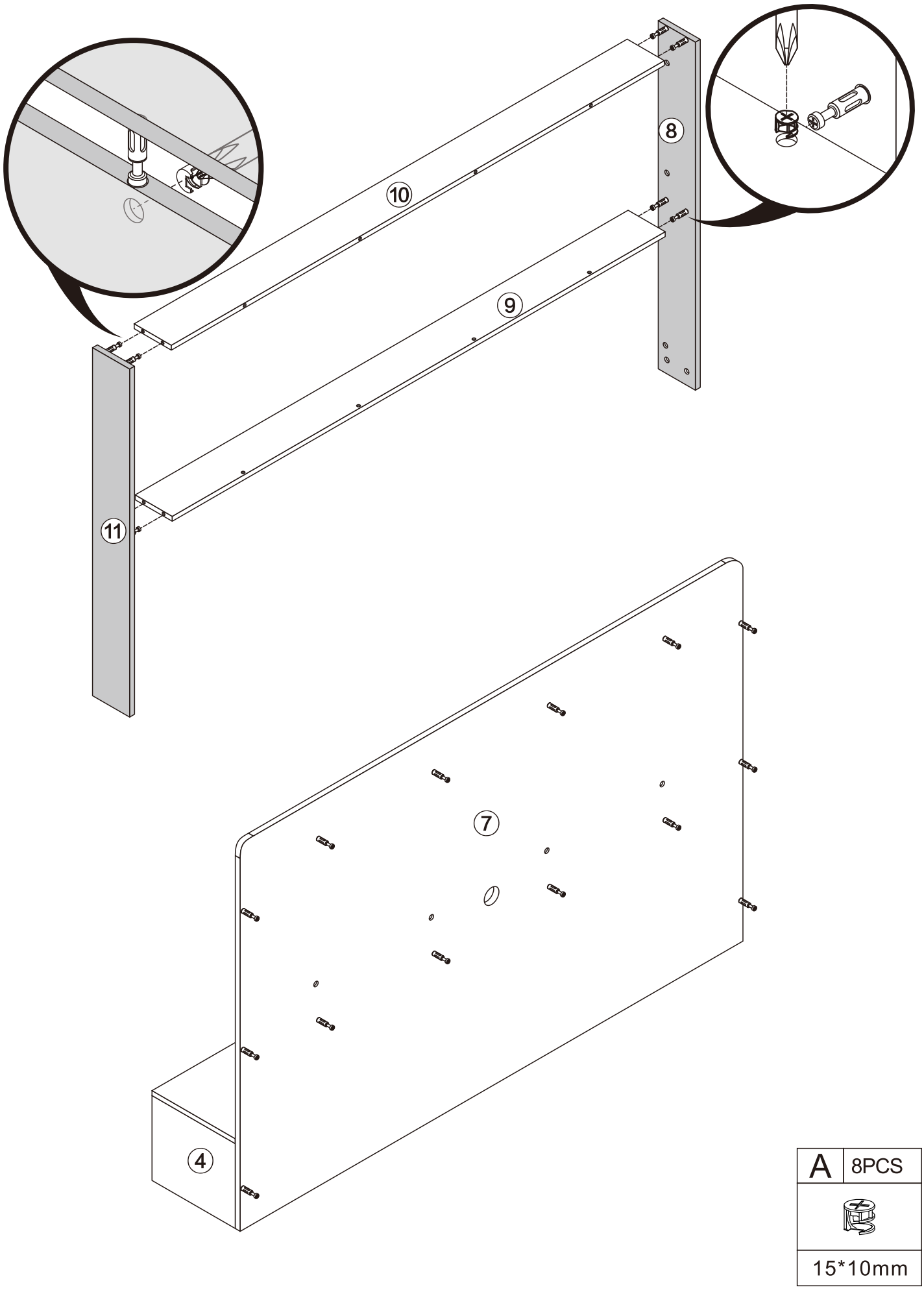

A	8PCS
15*10mm	

9

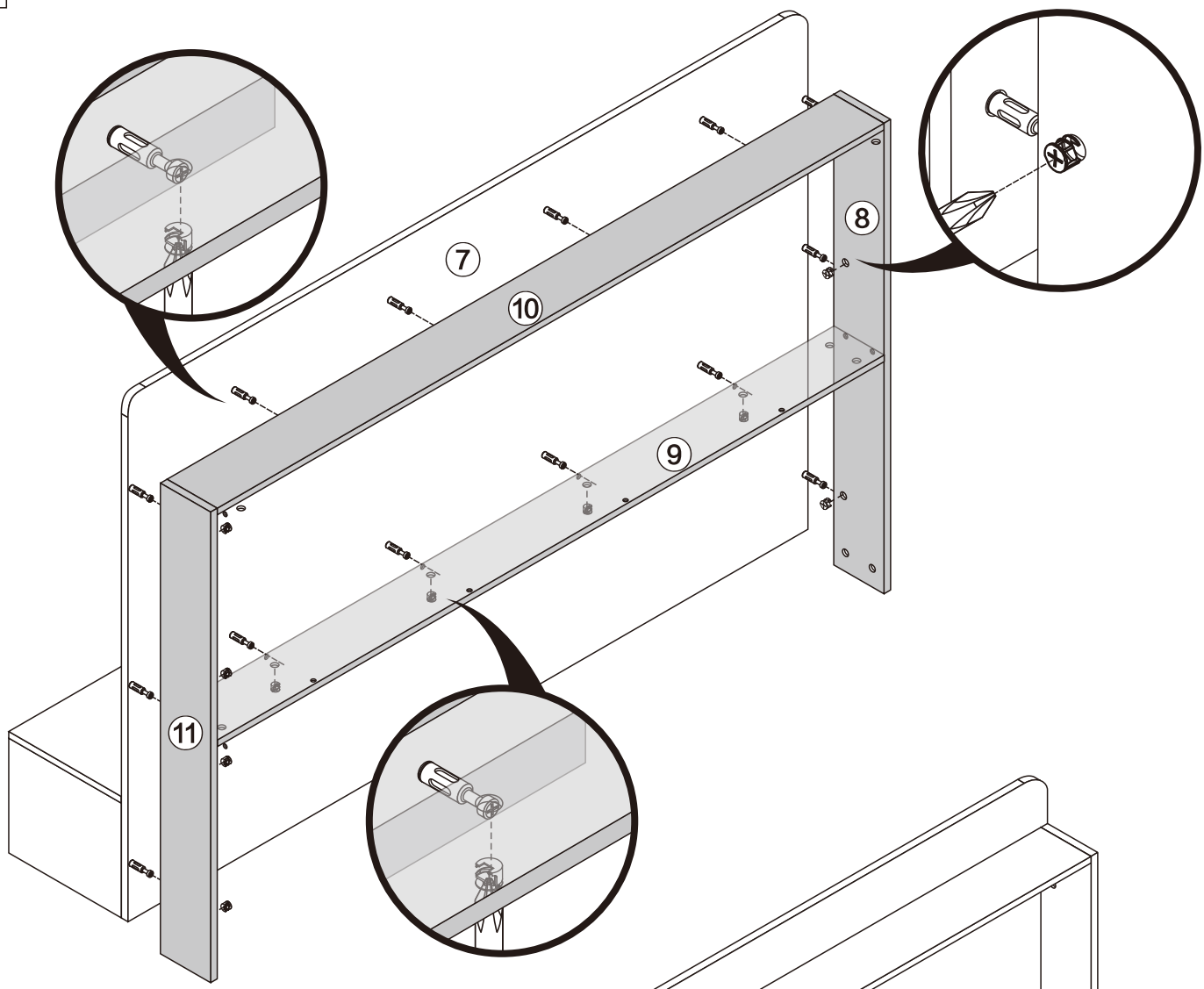

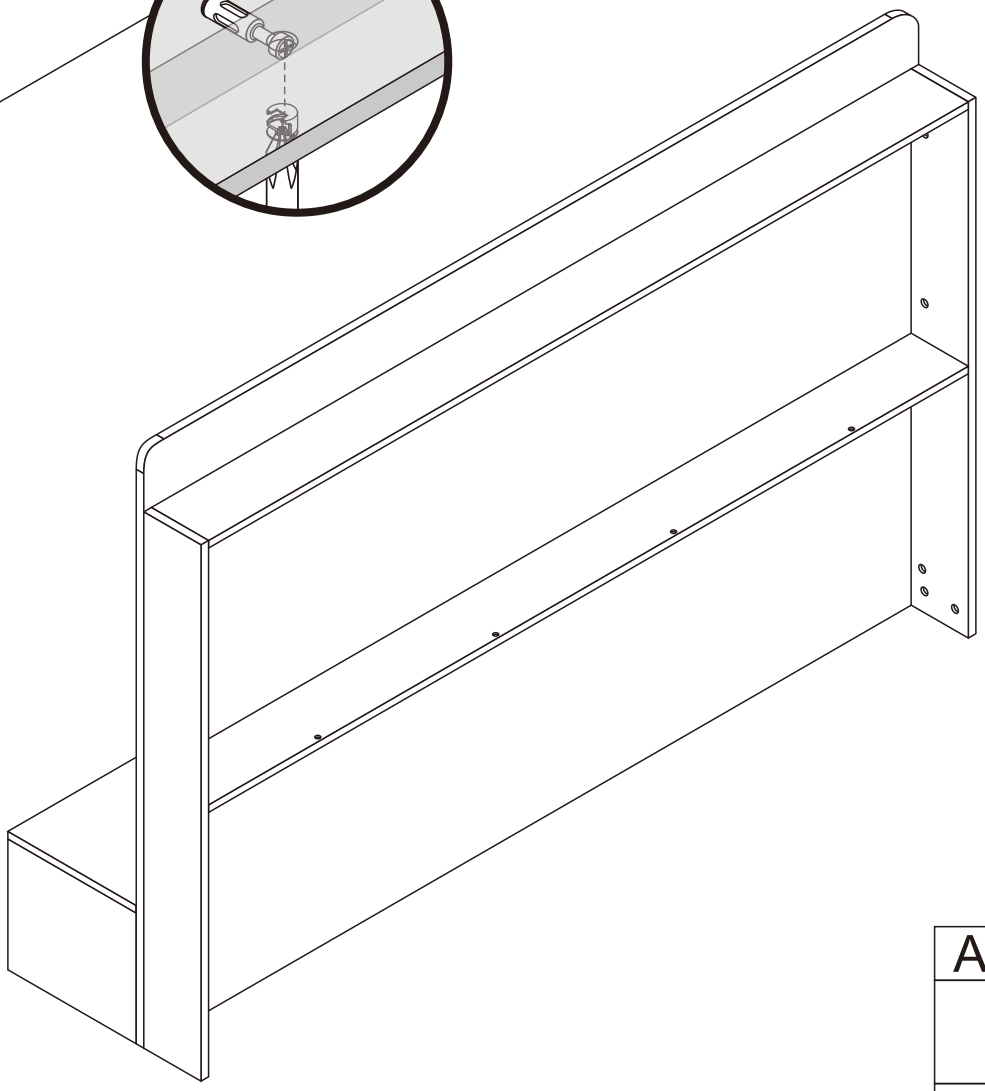

A	14PCS
	
15*10mm	

10

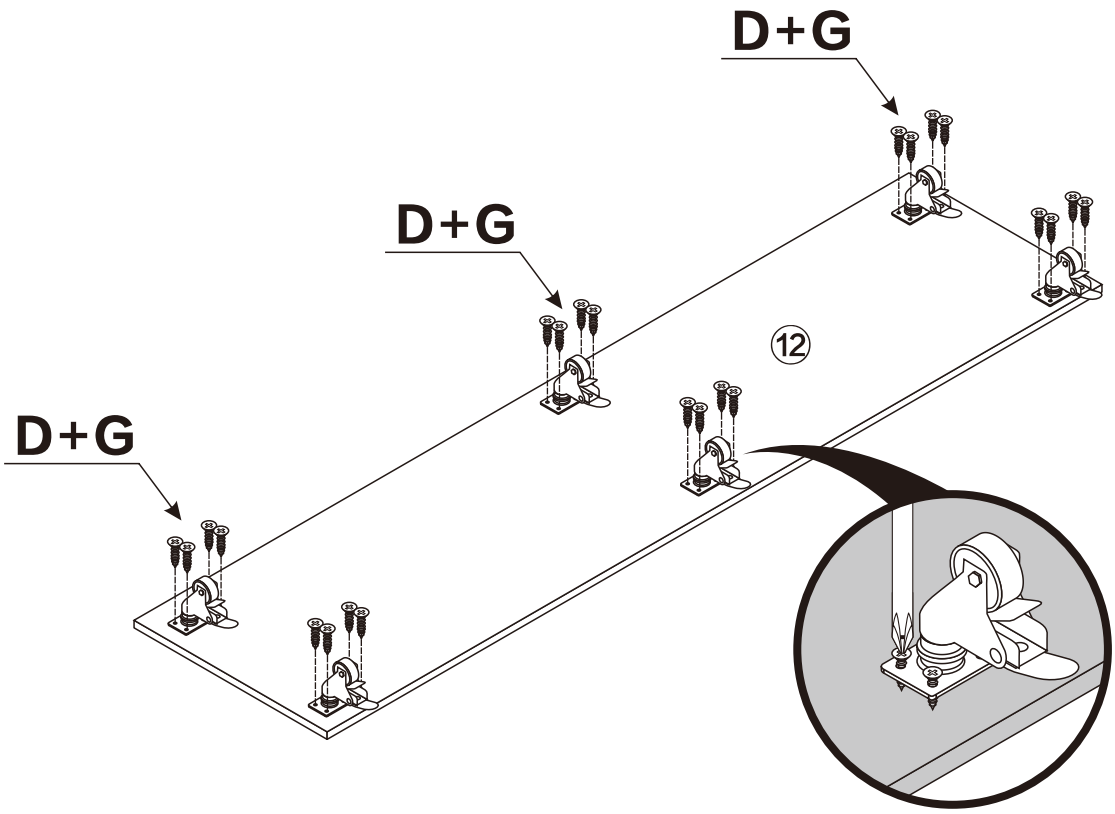

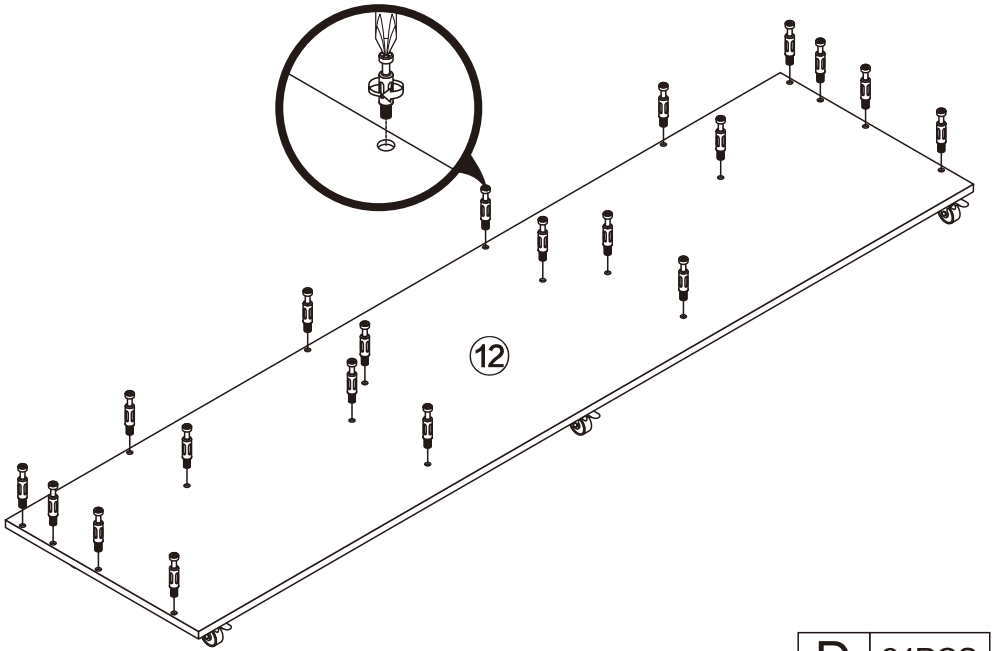

D	24PCS
	
3.5*14mm	

G	6PCS
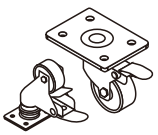	

11

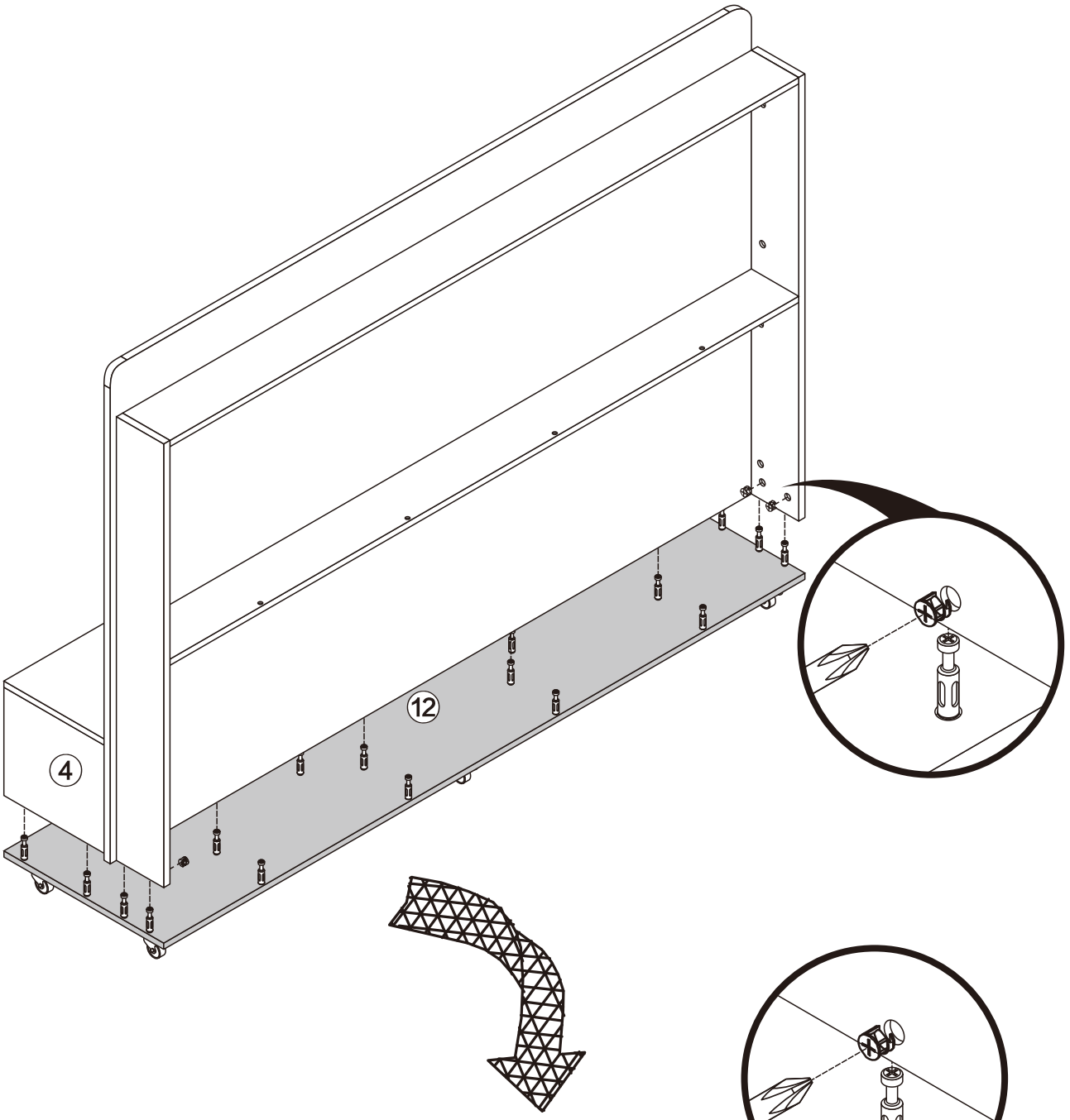

Front

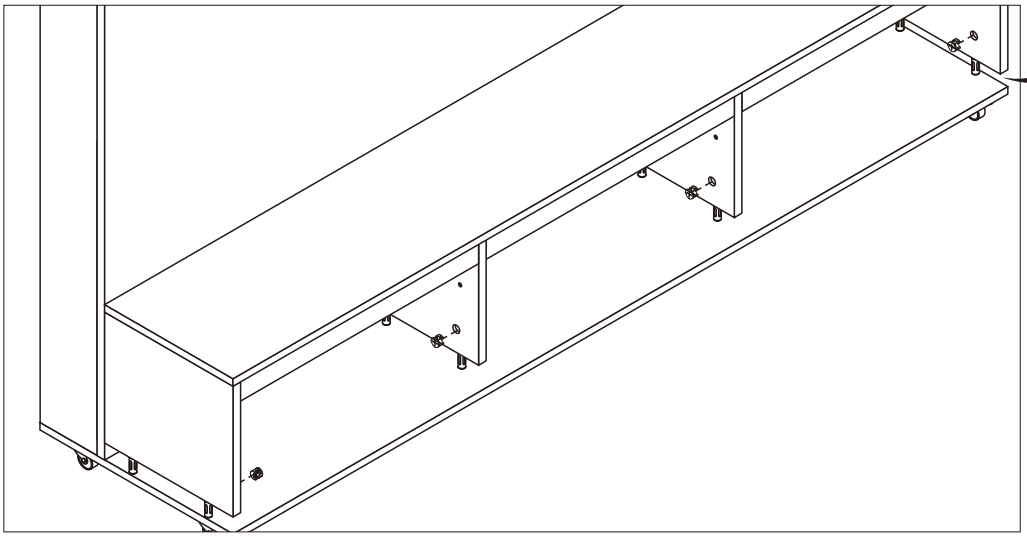

A	16PCS
	
15*10mm	

12

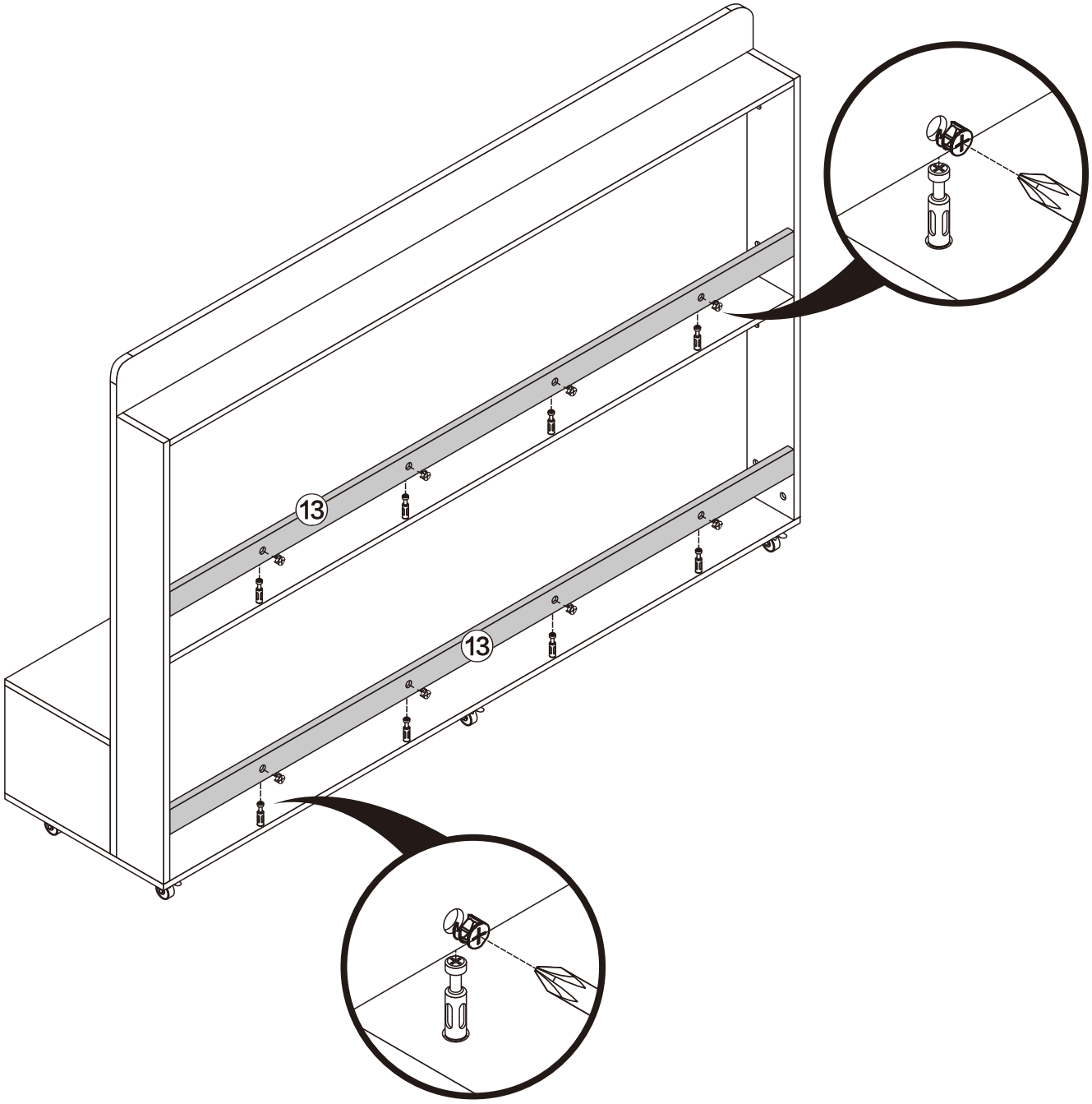

A	8PCS
	
15*10mm	

13

Ex4x3

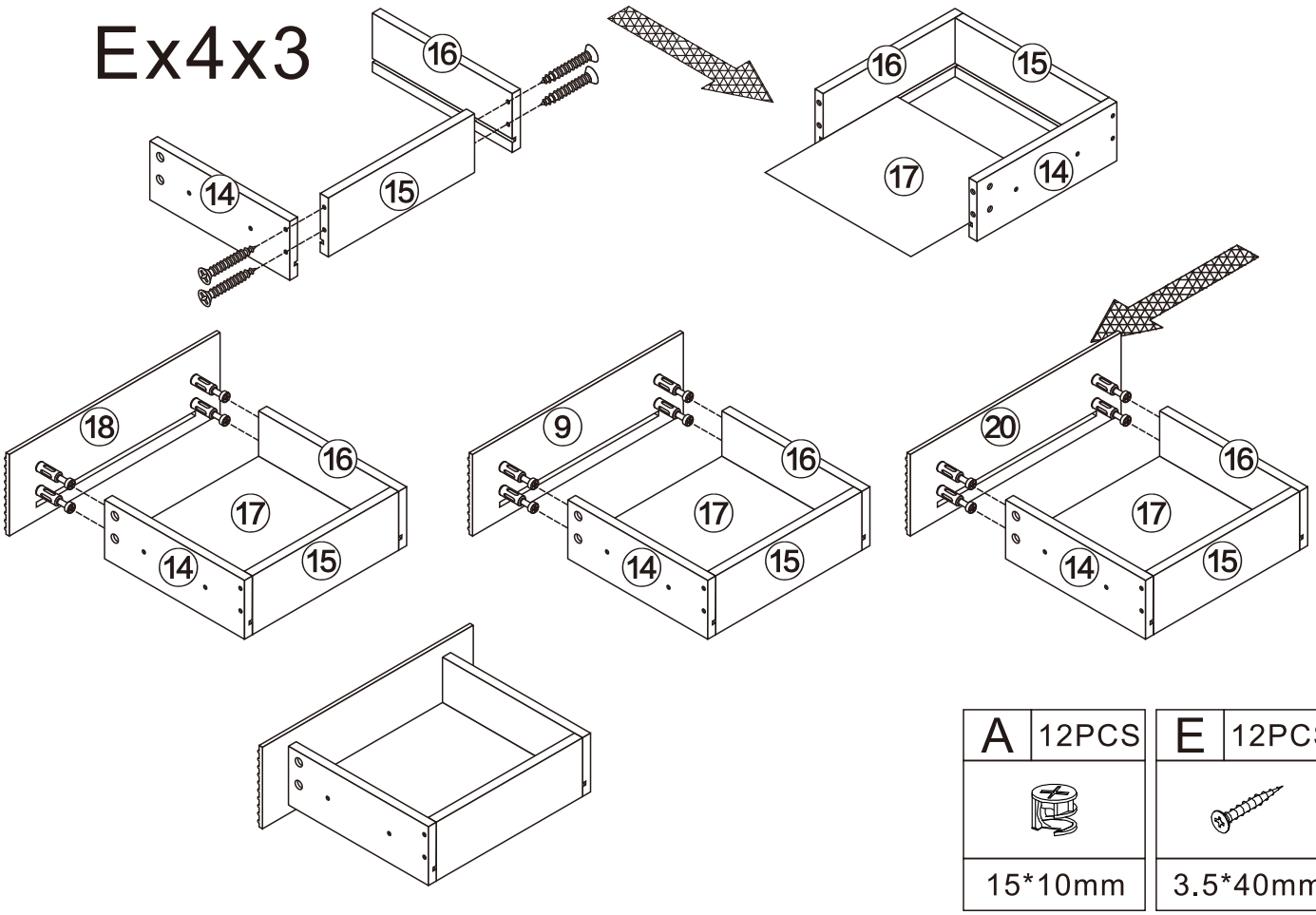

A	12PCS
15*10mm	

E	12PCS
3.5*40mm	

14

F2x6

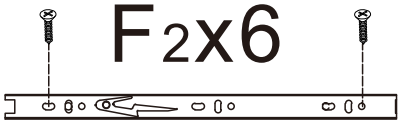

Dx12

F2

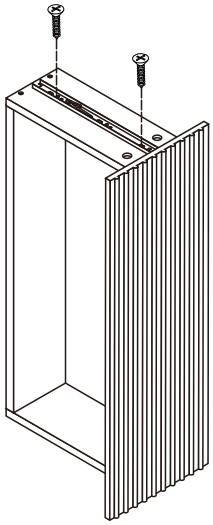

F2

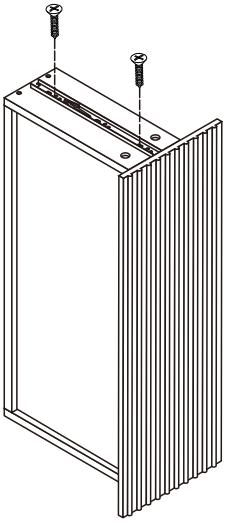

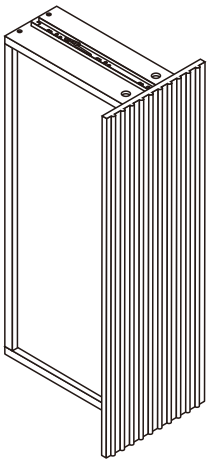

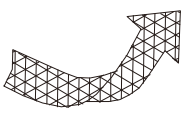

D	12PCS
	
3.5*14mm	

F2	6PCS
	
Three-section Rail	

15

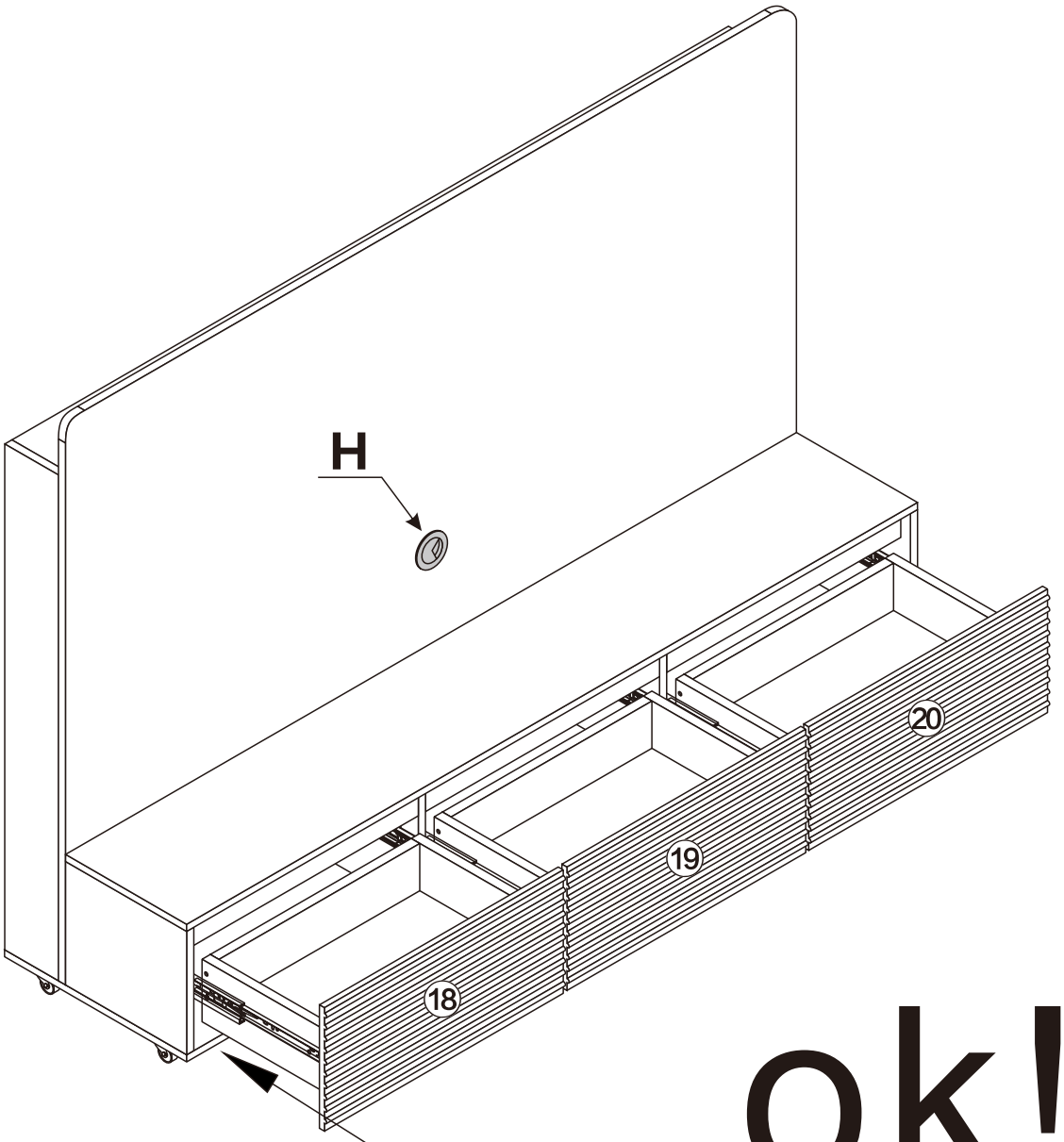

ok!

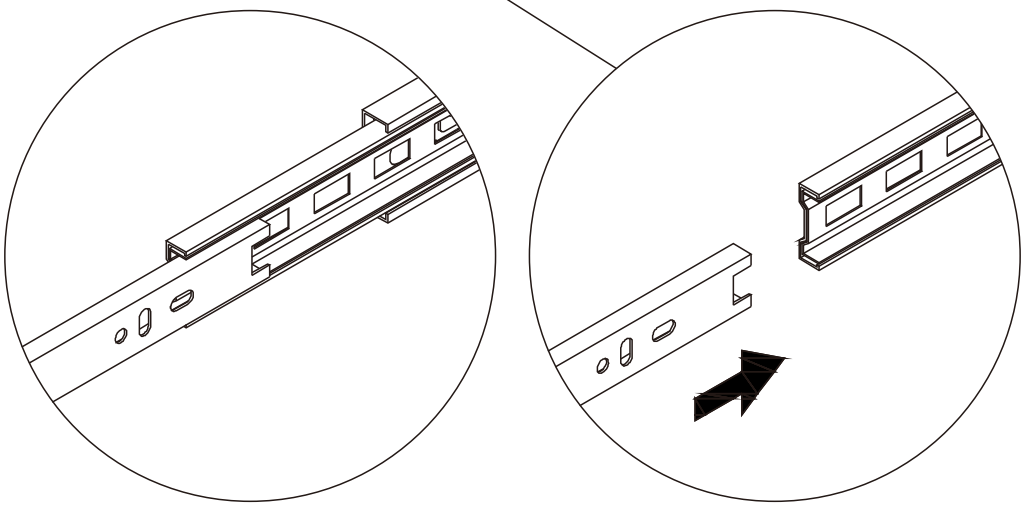

H	1PCS

