INSTALLATION
Product Manual

Version: 200330US-01-26A-AA

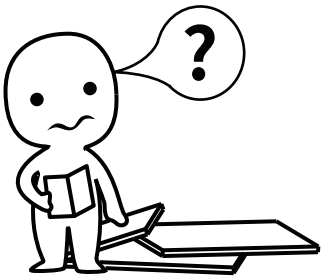

IMPORTANT INFORMATION!

please read the entire manual before starting to assemble and/or using this product.follow the manual thoroughly and keep it for further reference.

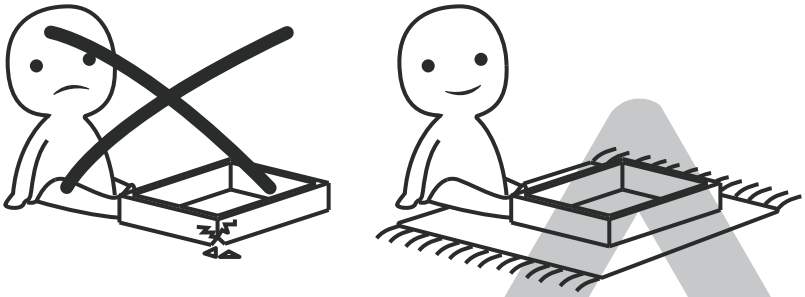

AVOID SCRATCHES!

In order to avoid scratching this furnuture should be assembled on a soft layer-could be a rug.

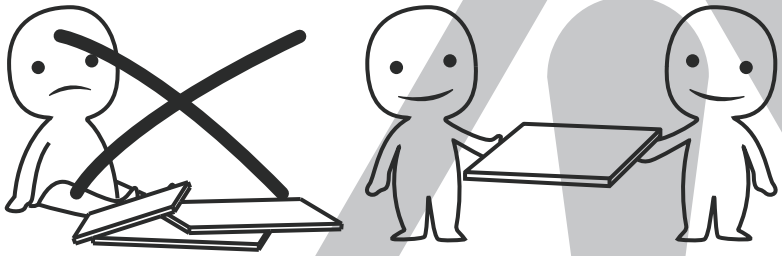

IMPROVE EFFICIENCY !

Try to find a partner to install with you, which can speed up the installation efficiency and shorten the time.

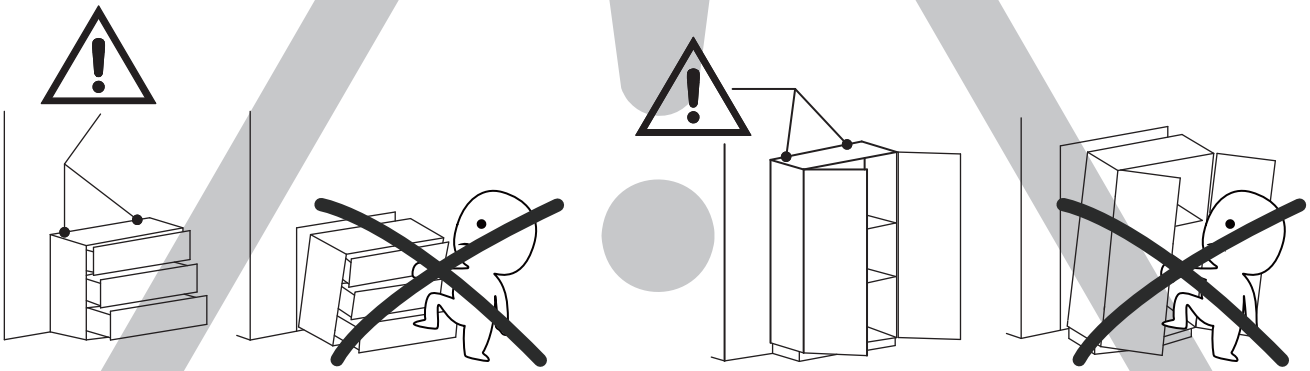

ANTI-TOPPLE WARNING !

Overturned furniture can cause serious or fatal crush injuries. To prevent tipping over, be sure to use the wall attachment, if not included with this product. Please purchase the wall attachment that fit your wall. If unsure, seek professional advice. Please read and follow each step of the instructions carefully.

IMPORTANT !

It is important that any product which is assembled using any kind of screw is re-tightened 2 weeks after assembly,and once every 3 months - in order to assure stability through-out the lifespan of the product.

For regular maintenance and cleaning of the product, for the frame, please use a rag dipped in neutral detergent to fully wipe it, and then dry it with a clean rag.For glass materials, wipe with a rag dampened with water glass cleaner, and then dry with a dry rag.

Do not use an electric screwdriver, and do not use too much force when installing, because the board is easy to break.

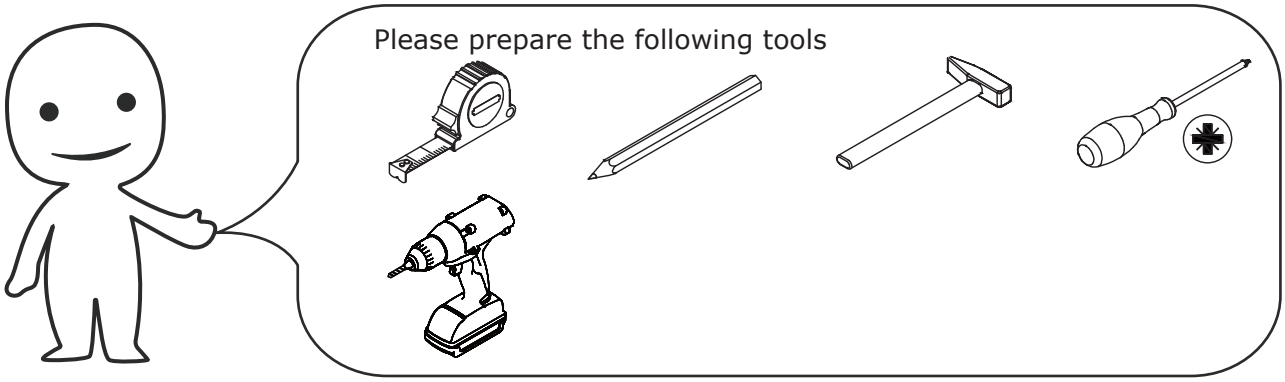



When installing, please carefully confirm whether each screw corresponds to the manual, accessories with similar shapes can be distinguished by size

A x 51	B x 51	C x 51	D x 18
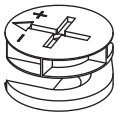	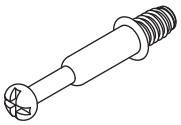		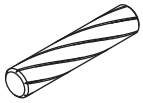
∅15 x 10 mm	∅6 x 35 mm		∅6 x 30 mm

E x 31	F x 2	G x 12	H x 5
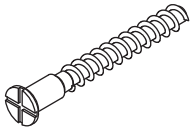		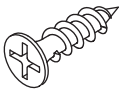	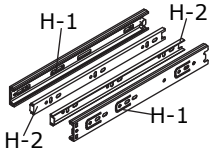
∅5 x 40 mm		∅3.5 x 14 mm	300mm

J x 60	K x 6	L x 12	M x 4
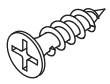	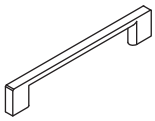	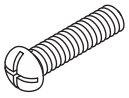	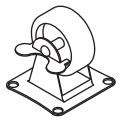
∅3.5 x 12 mm		∅4 x 18 mm	

N x 24	P x 1	Q x 4	R x 12
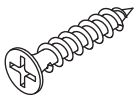	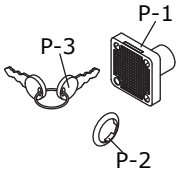	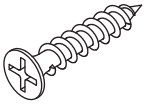	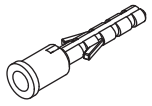
∅4 x 16 mm		∅3.5 x 20 mm	∅8 x 38 mm

S x 12	T x 14	U x 1	V x 1
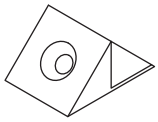	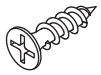 ∅3 x 14 mm	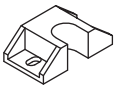	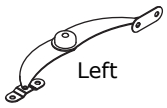

W x 1	X x 1	Y x 8
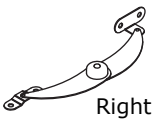	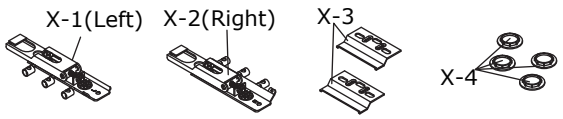	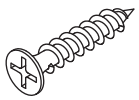 ∅3.5 x 25 mm

Z x 6	AA x 6	BB x 4	CC x 4
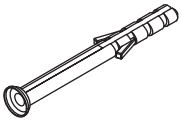 ∅8 x 80 mm	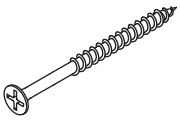 ∅5 x 80 mm	 ∅6 x 12 mm	

DD x 1	EE x 1	FF x 18	GG x 18
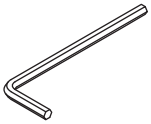	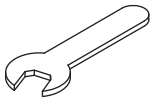	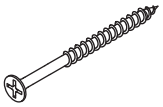 ∅4 x 68 mm	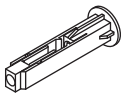

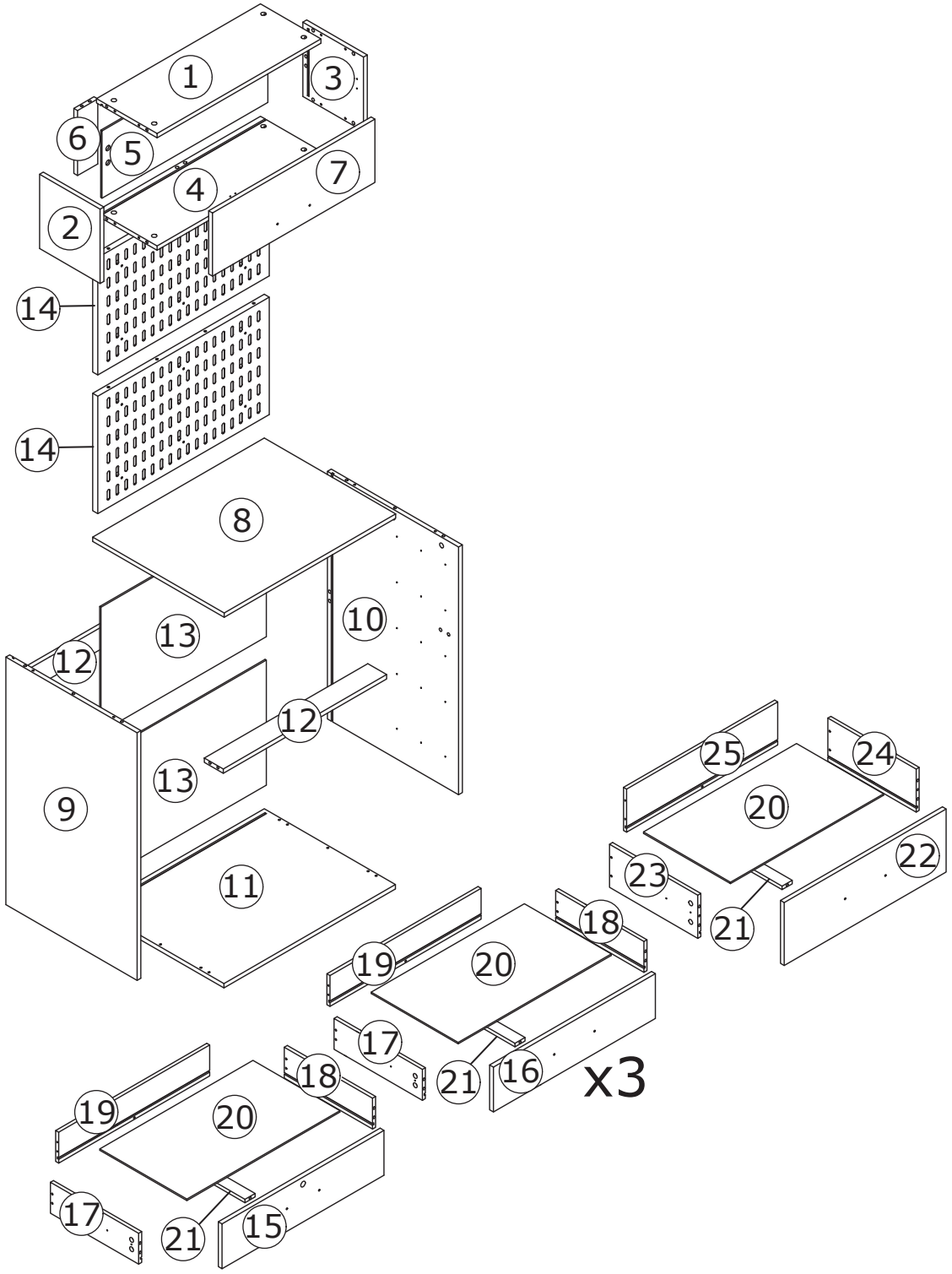

⚠WARNING





Children have died from furniture tipover.To reduce the risk of furniture tipover:

- ALWAYS install Anti-tip device provided.
- NEVER put a TV on this product.
- NEVER allow children to stand,climb or hang on drawers,doors,or shelves.
- NEVER open more than one drawer at a time.
- Place heaviest items in the lowest drawers.

This is a permanent label.
Do not remove!

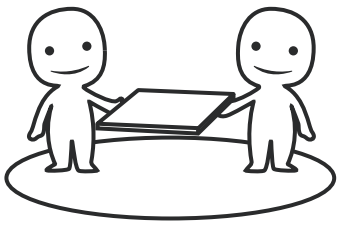

ASSEMBLED BY 2 ADULTS

Sllides Must Be Separated Before Assembly.
After Separated, Set Aside Until Needed for Assembly.

Las diapositivas deben separarse antes del montaje.
Después de la separación, déjelo a un lado hasta que sea necesario.

Les glissières doivent être séparées avant I'assemblage.
Après la séparation, mettez de côté jusqu'au moment de I'assemblage.

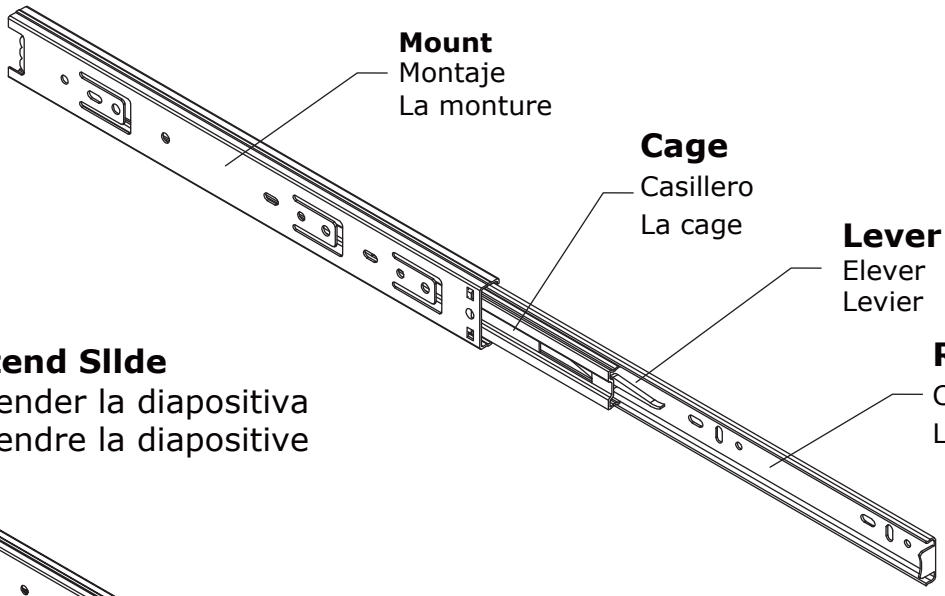

STEP 1: Extend Sllde
Extender la diapositiva
Extendre la diapositive

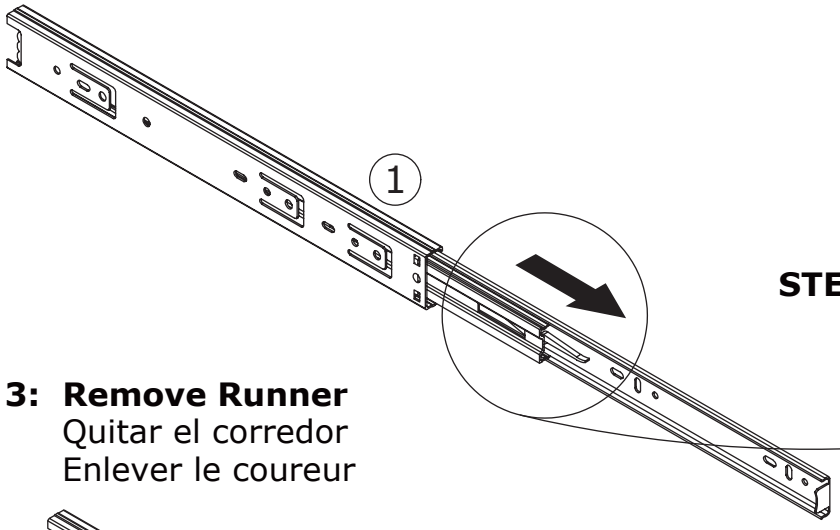

STEP 2: Push Lever UP
Empujar hacia arriba
Lever le levier

STEP 3: Remove Runner
Quitar el corredor
Enlever le coureur

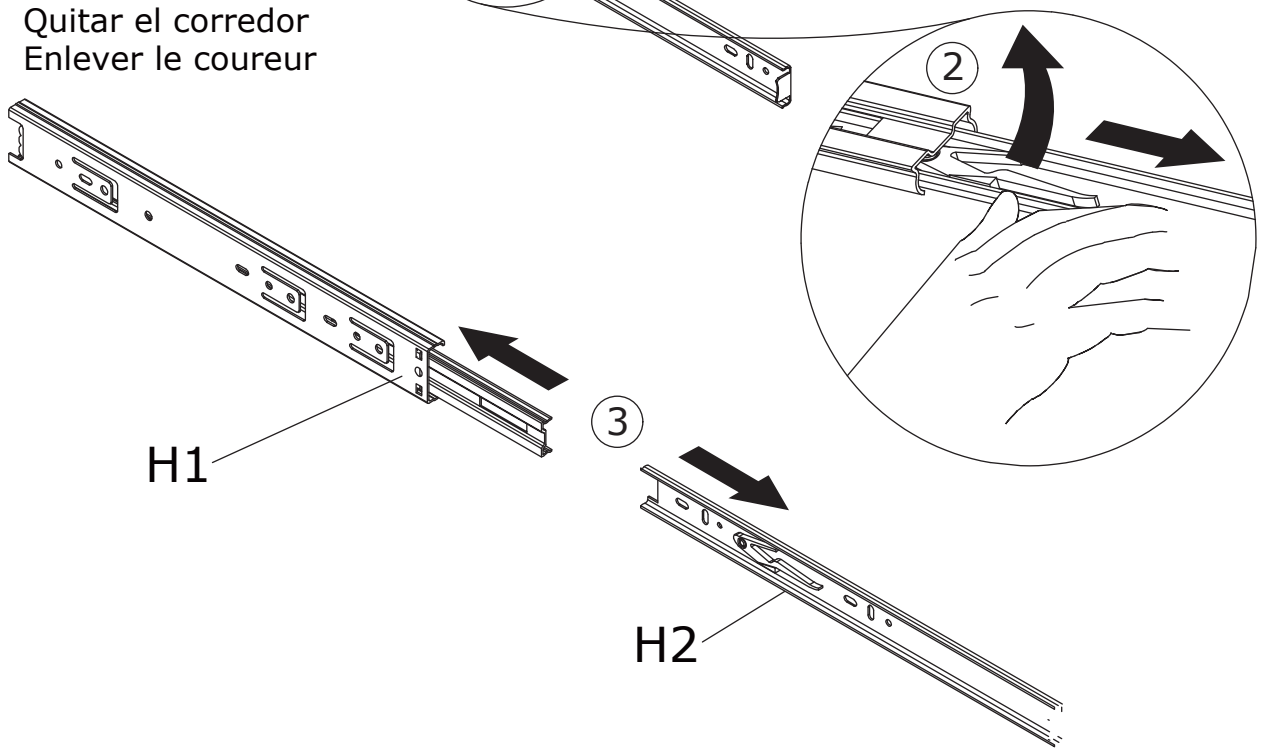

1

B x 8	C x 8	
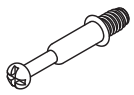 ∅6 x 35 mm		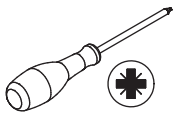

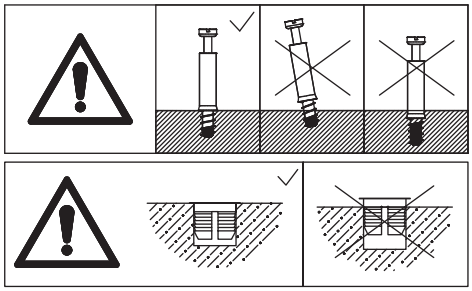

Install plug (C) onto panels 9 and 10, then screw self-tapping rod (B) into panels 9 and 10.

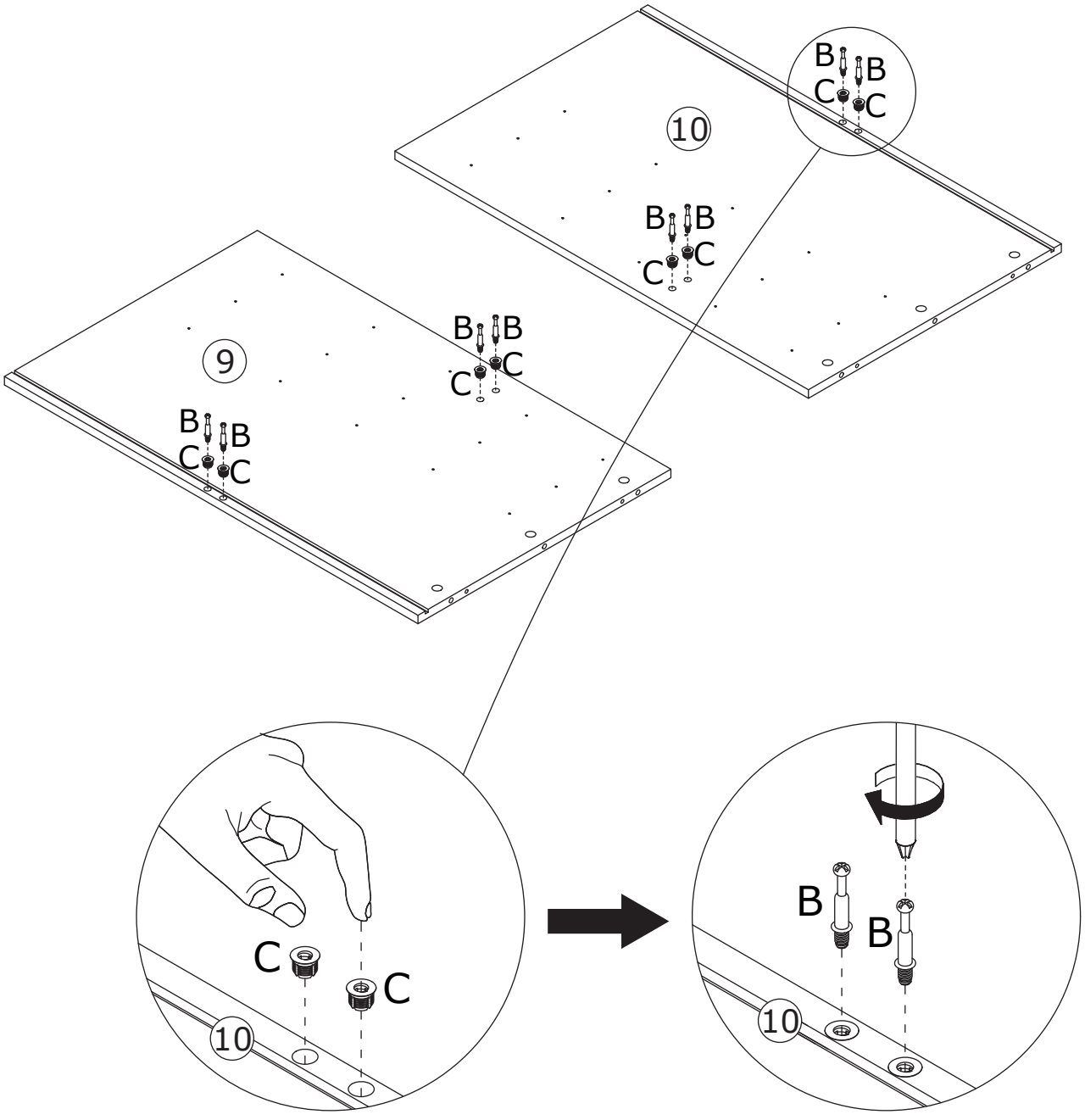

2

H x 5	J x 20	
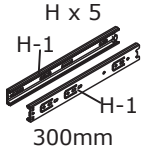 300mm	 ∅3.5 x 12 mm	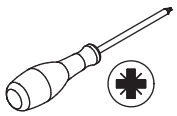

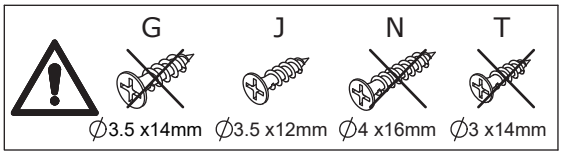

Extend the slide rail.
Secure slide rail (H-1) to panel 9 and 10 using screw (J).

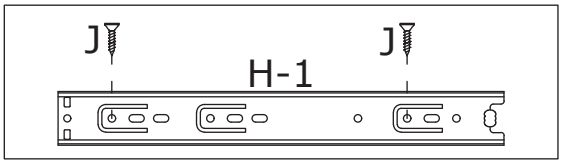

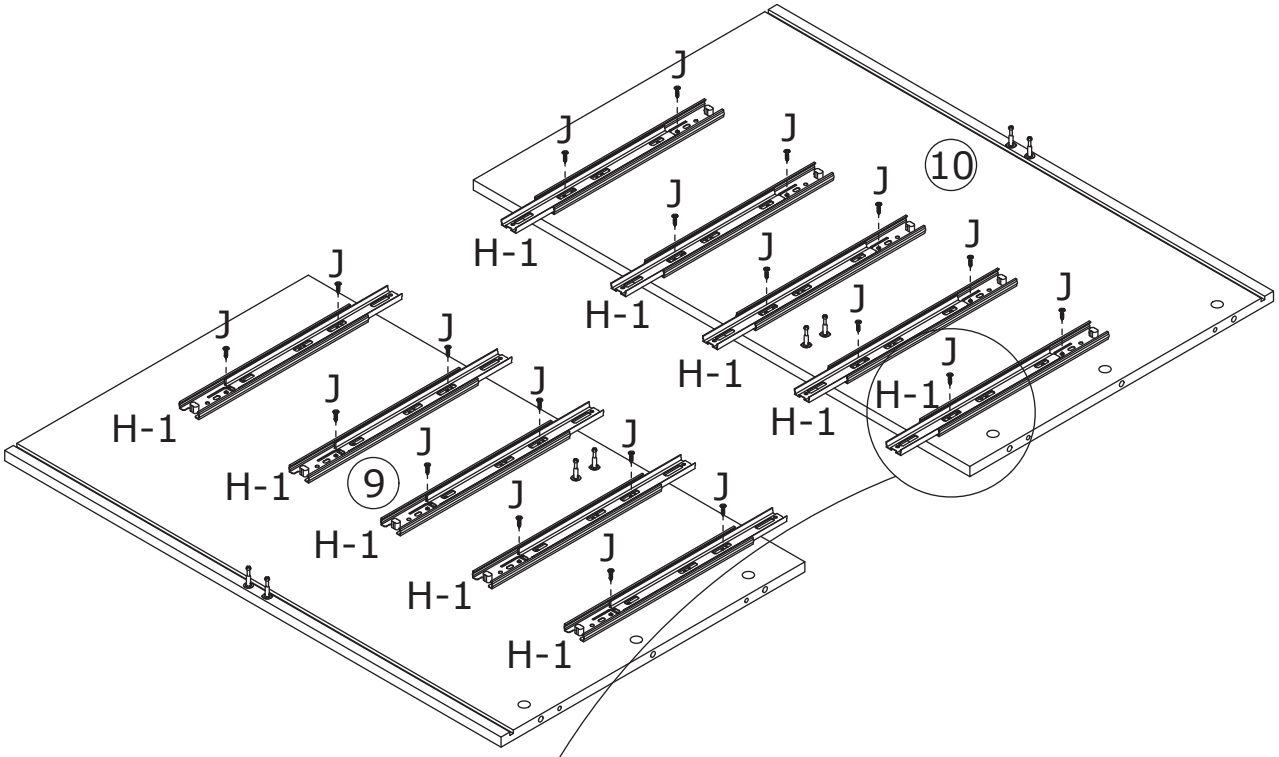

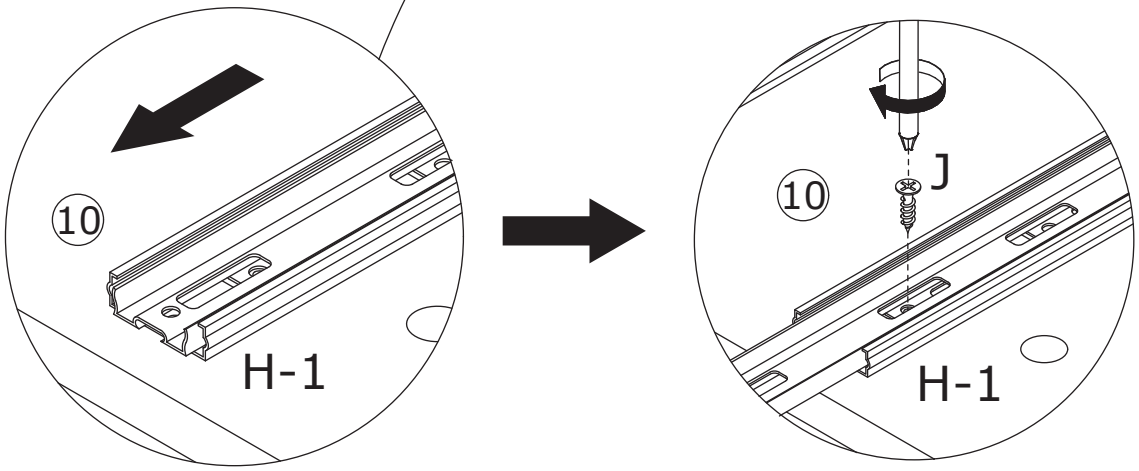

3

J x 10

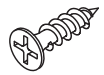

∅3.5 x 12 mm

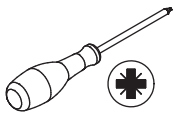

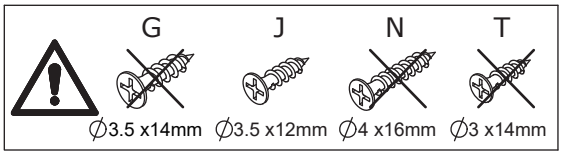

Shorten the slide rail.
Secure slide rail (H-1) to panel 9 and 10 using screw (J).

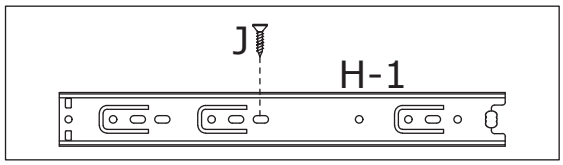

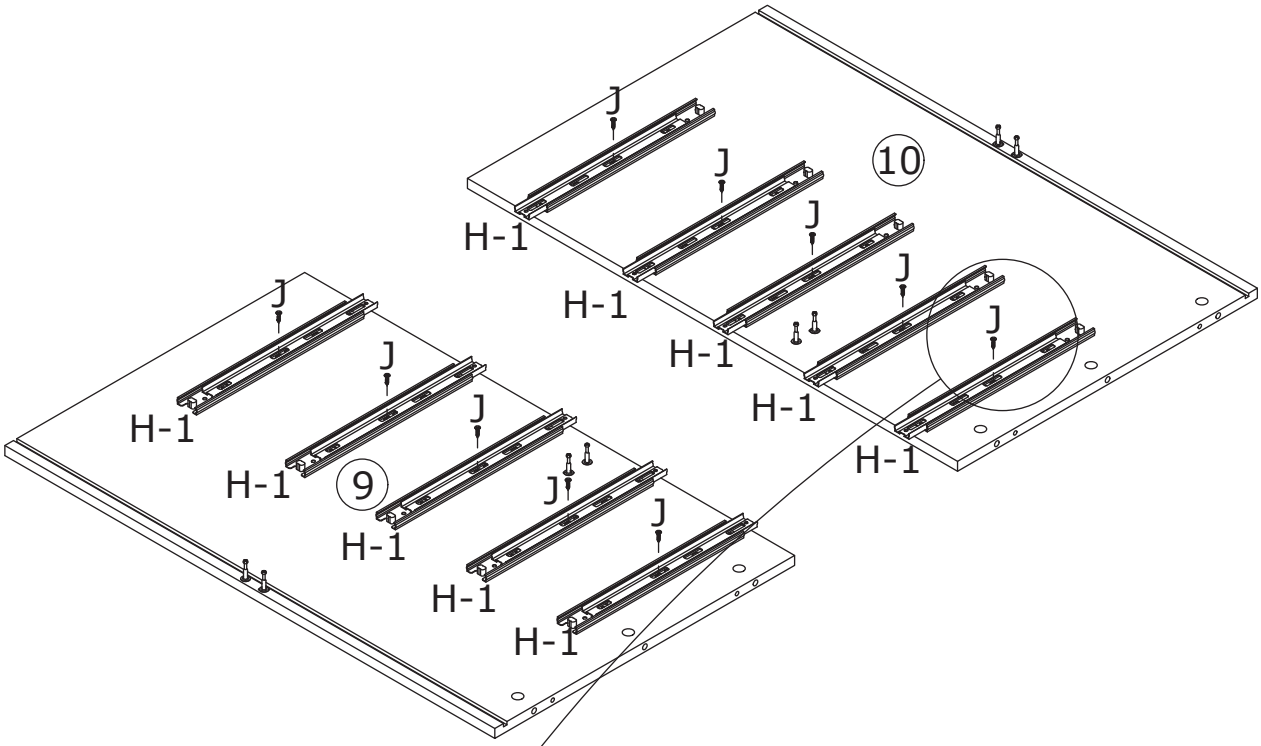

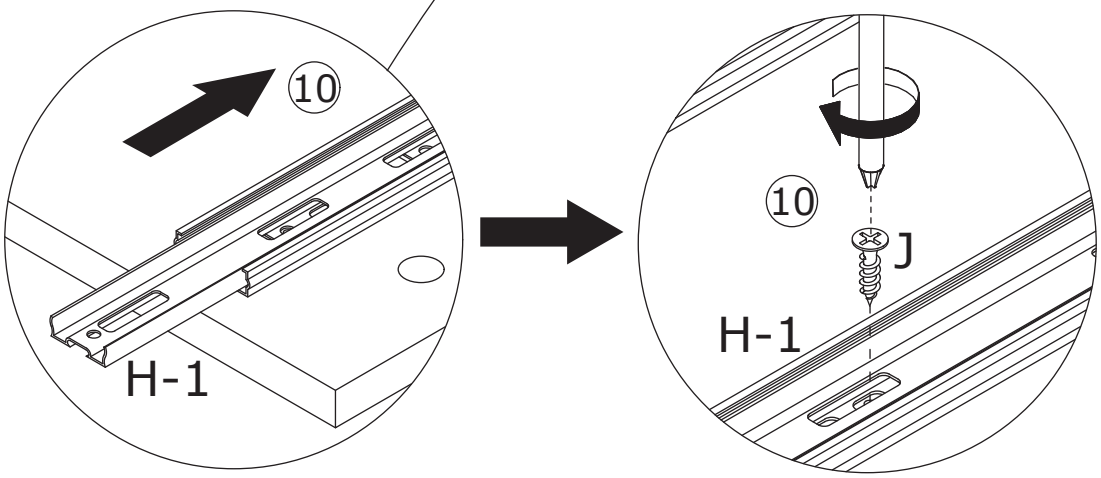

4

A x 4



∅15 x 10 mm

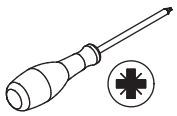

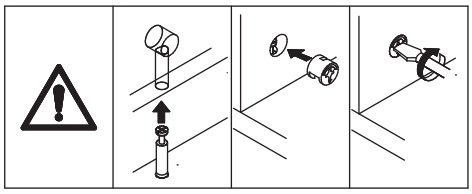

Connect panels 9 and 10 to panel 12, then tighten by turning cam lock (A) clockwise.

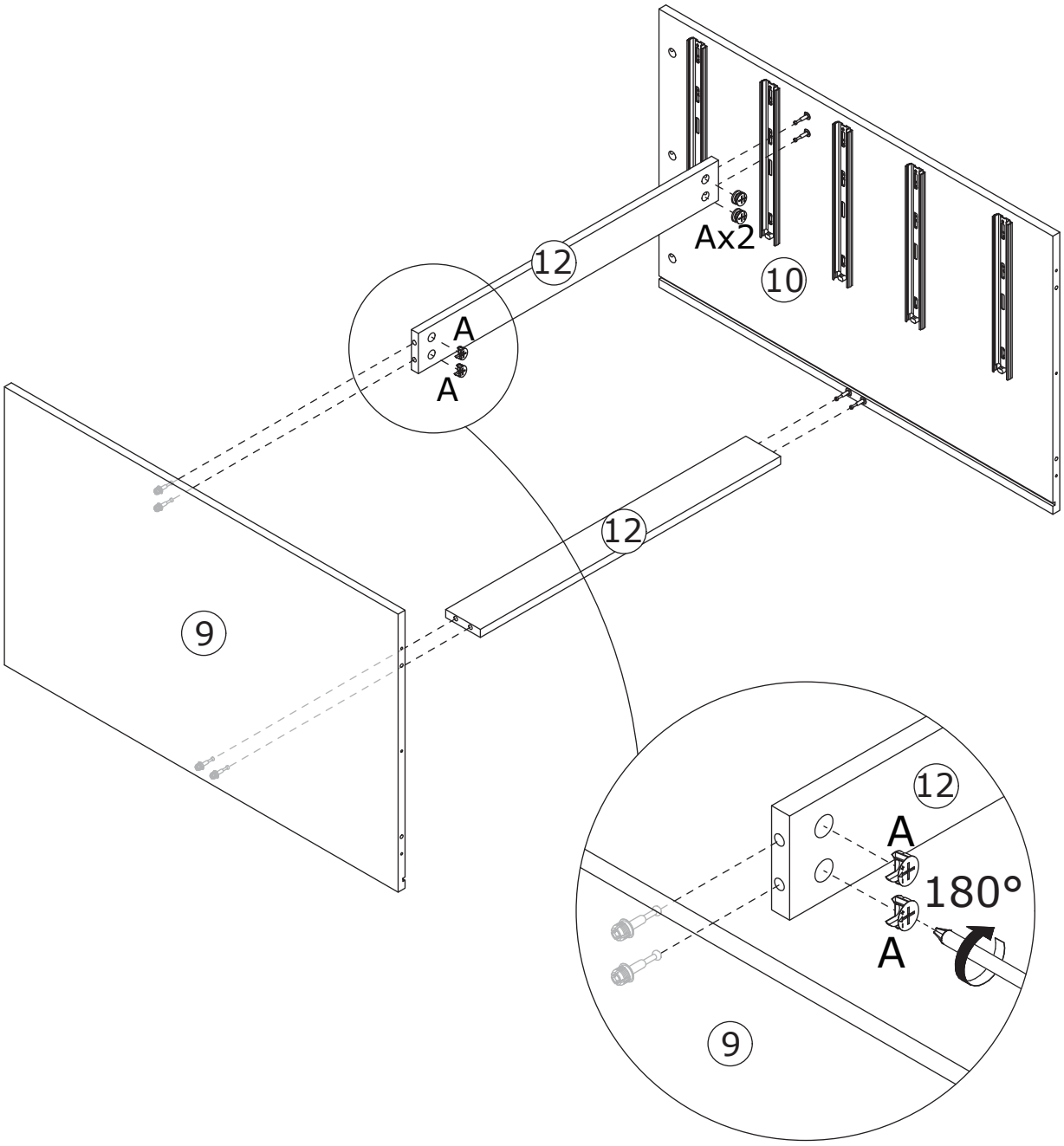

5

B x 6	C x 6	
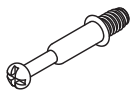 ∅6 x 35 mm		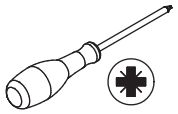

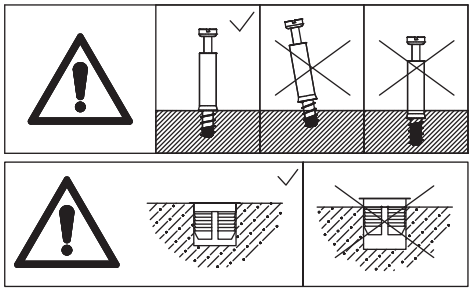

Install plug (C) onto panel 8, then screw self-tapping rod (B) into panel 8.

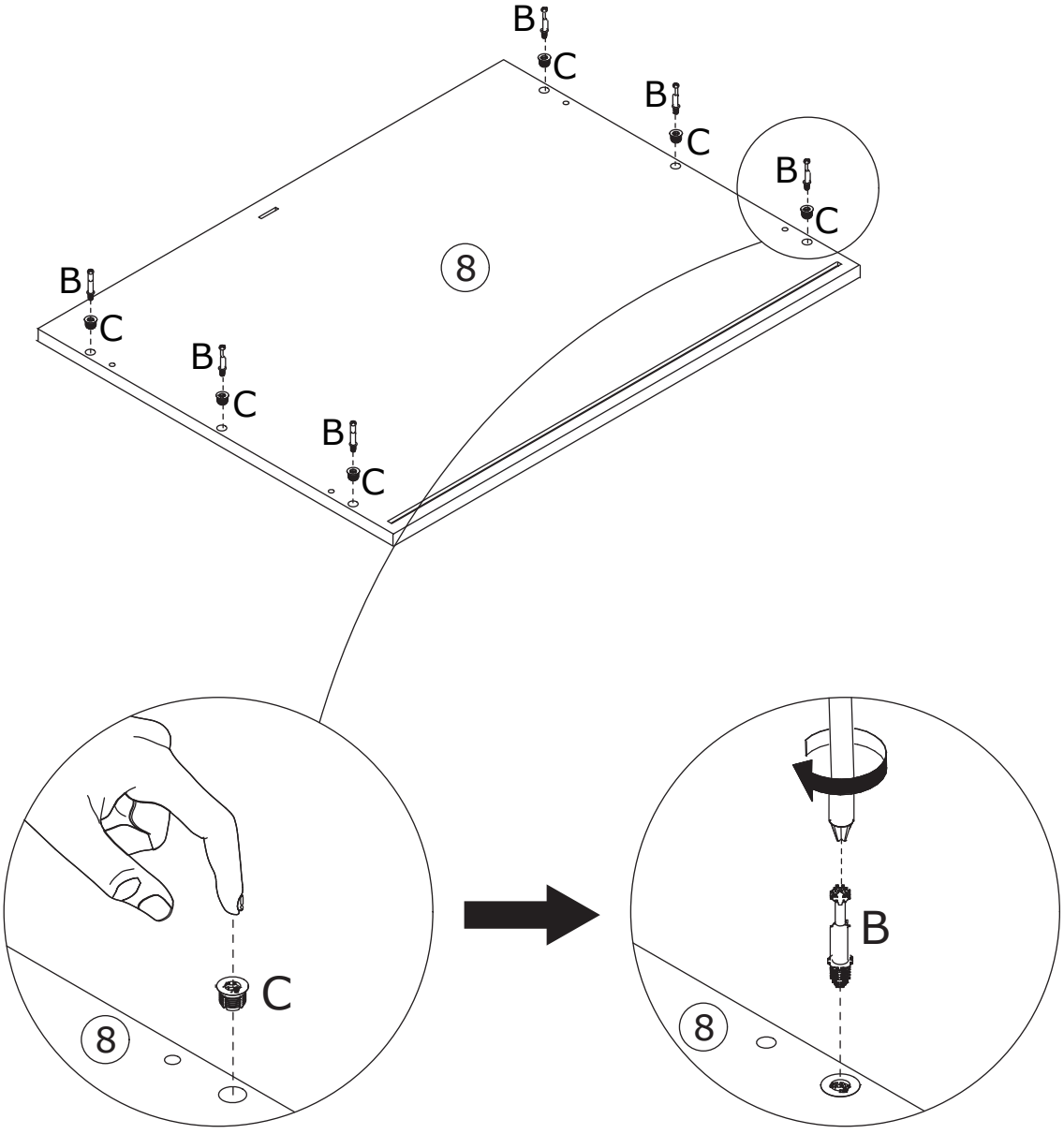

6

A x 6	D x 4	
	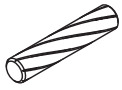	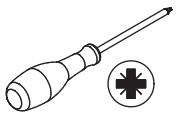
∅15 x 10 mm	∅6 x 30 mm	

Connect panel 8 to panels 9 and 10 using wooden dowel (D), then tighten by turning cam lock (A) clockwise.

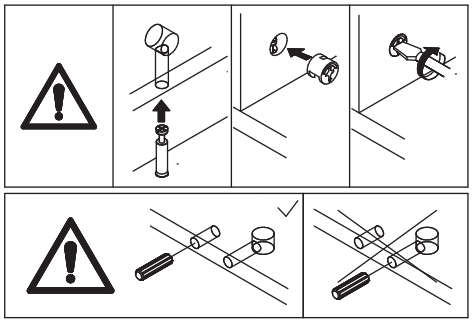

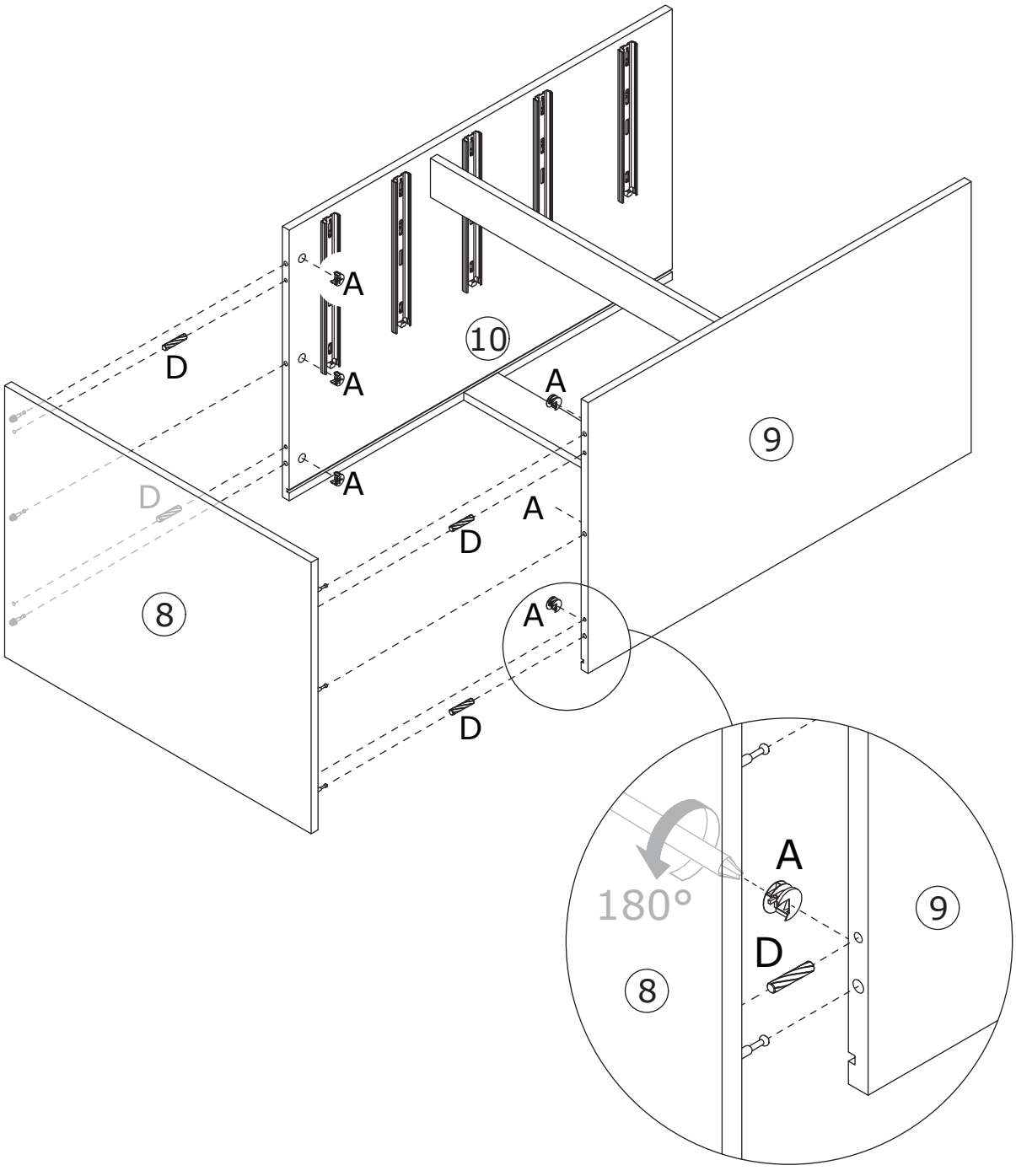

7

A x 4



∅15 x 10 mm

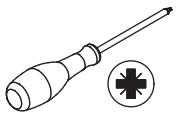

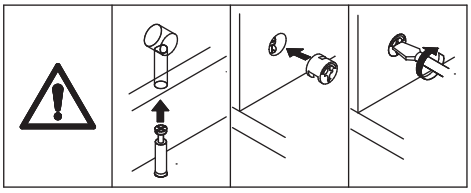

Flip the cabinet body, insert cam lock (A) into panel 12, and tighten it clockwise.

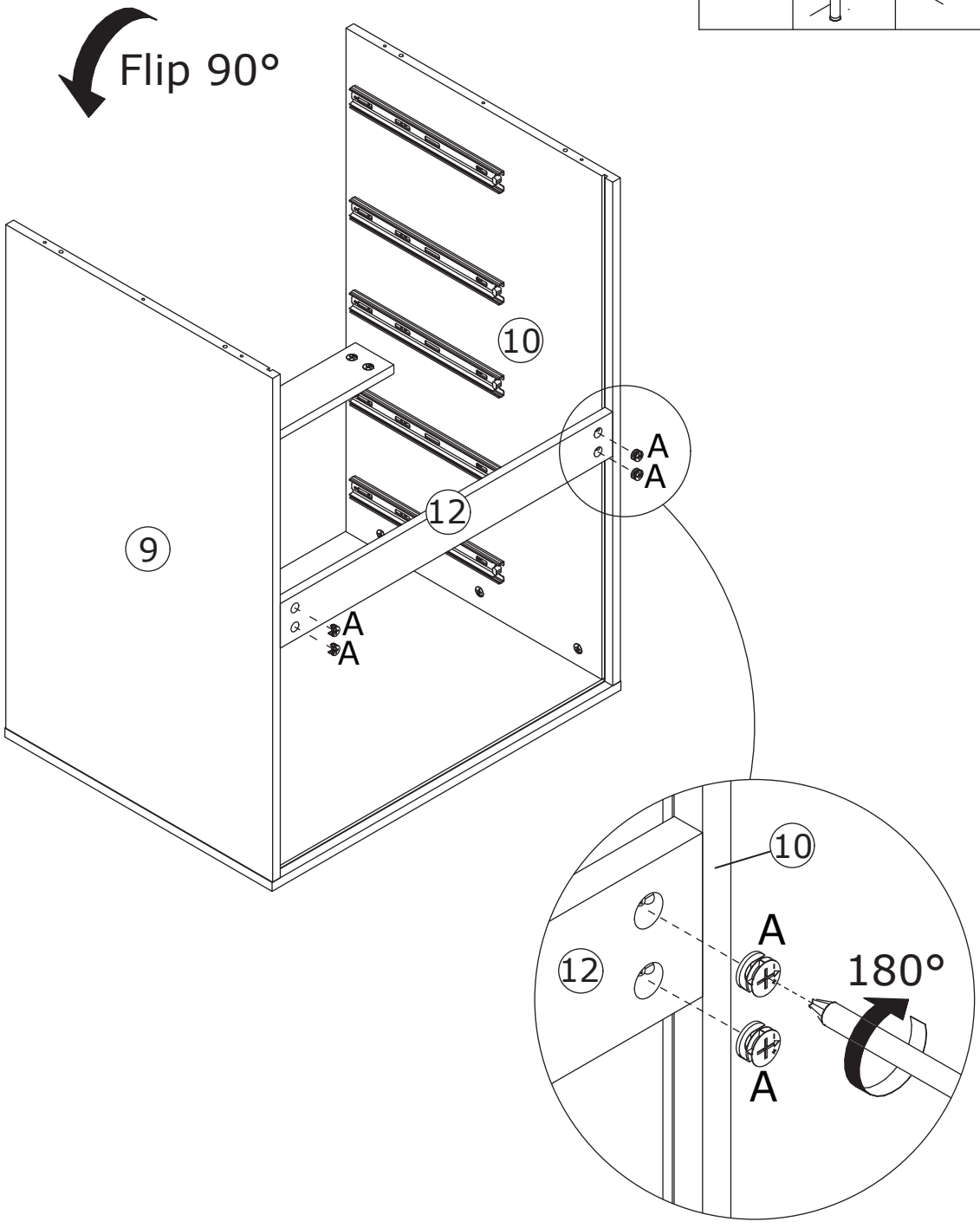

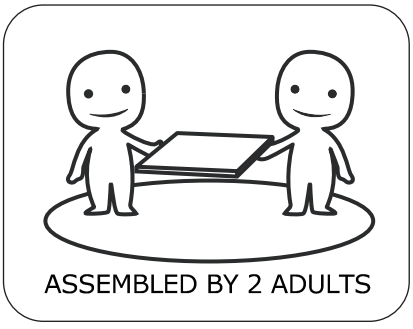

8

Insert panel 13 into the available grooves.

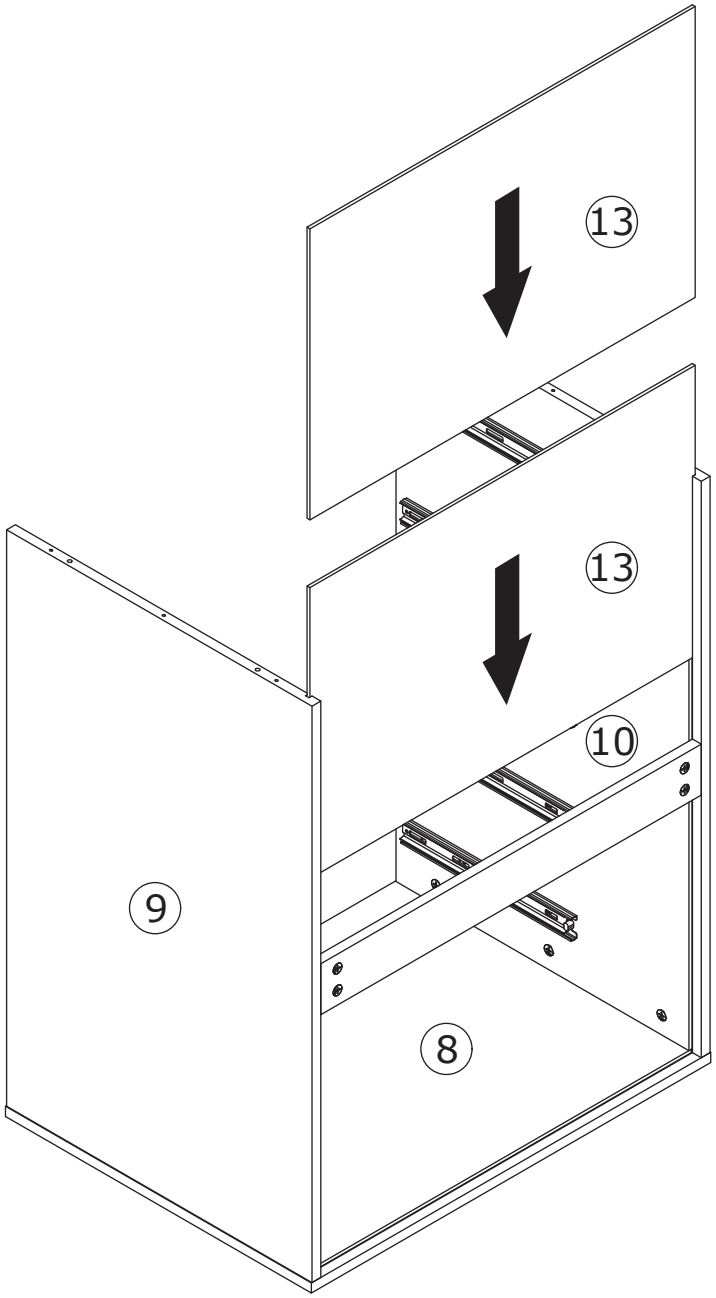

9

D x 4	E x 6	
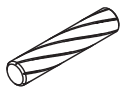	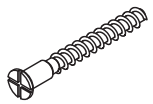	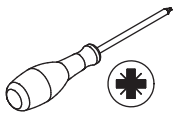
∅6 x 30 mm	∅5 x 40 mm	

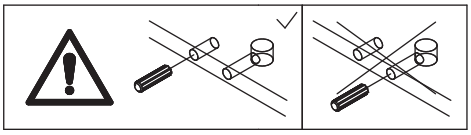

Connect panel 11 to panels 9 and 10 using wooden dowel (D), and secure them with screw (E).

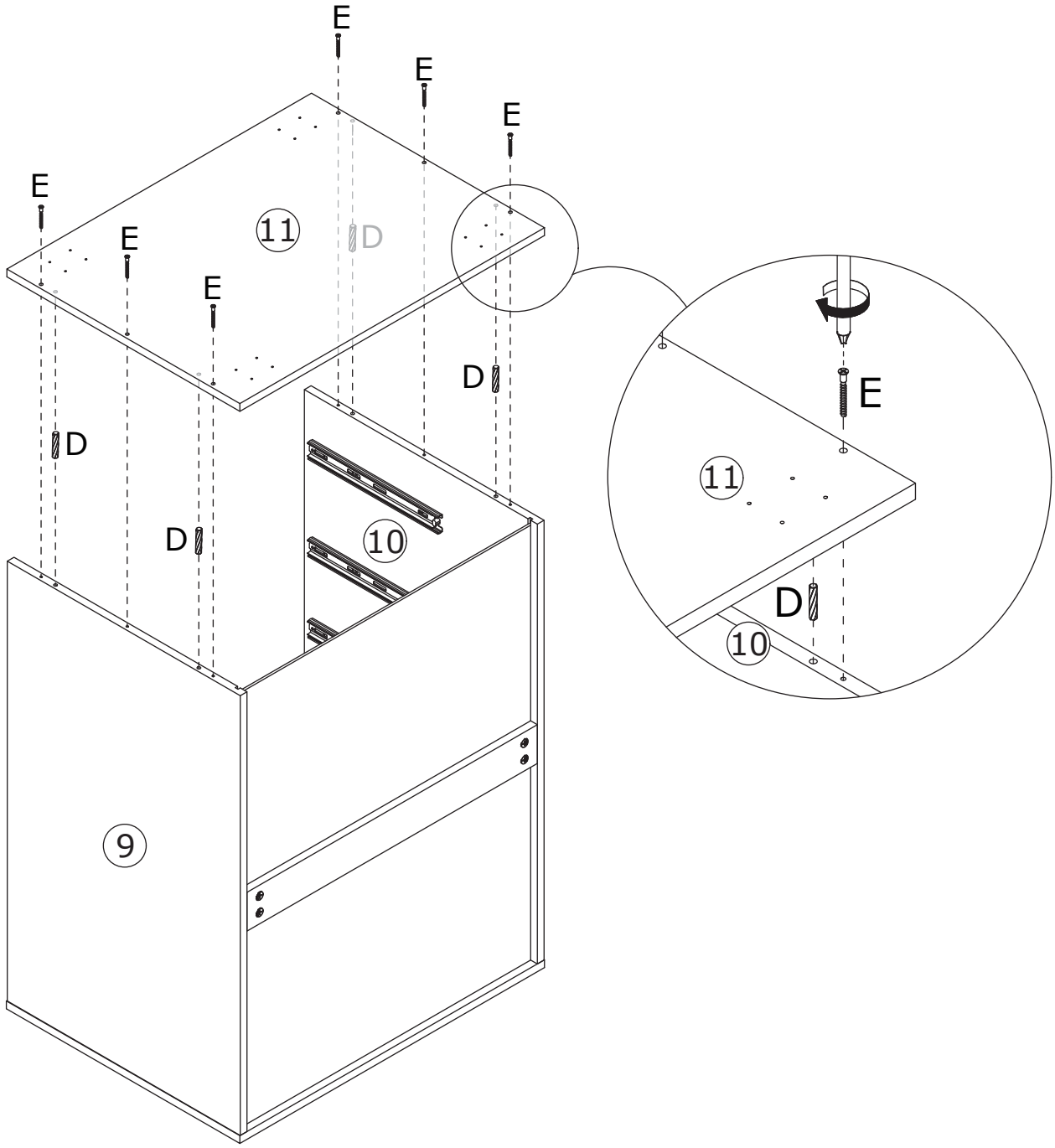

10

S x 6

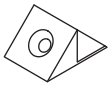

T x 6

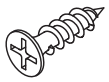

∅3 x 14 mm

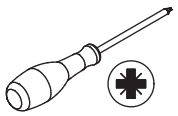

First, insert clip (S) into the available slots, then secure them with screw (T).

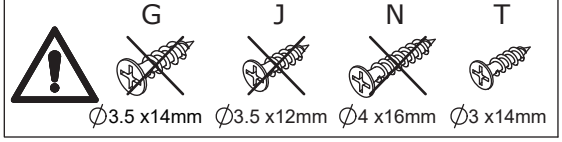

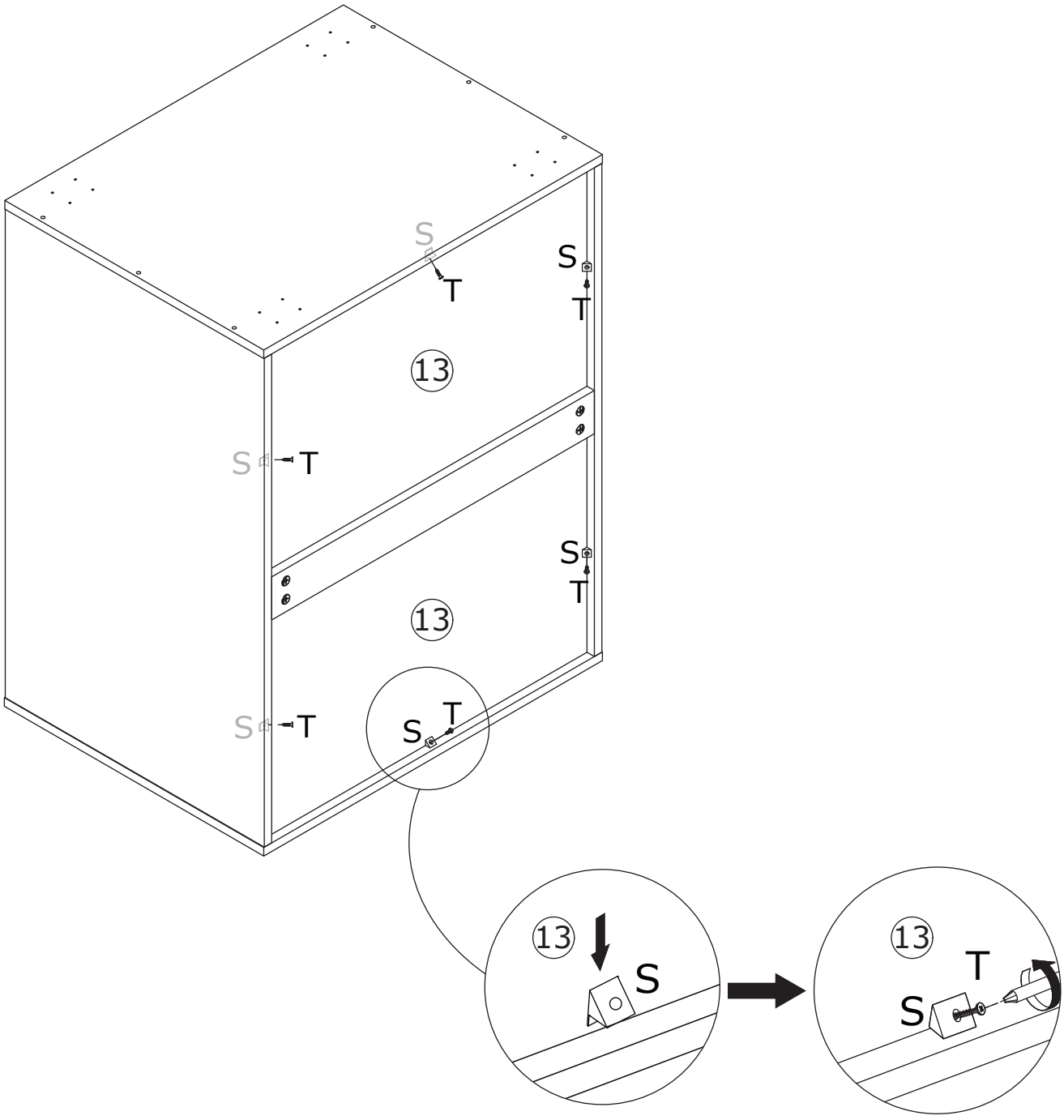

11

M x 4	N x 16	
	 ∅4 x 16 mm	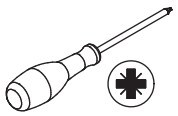

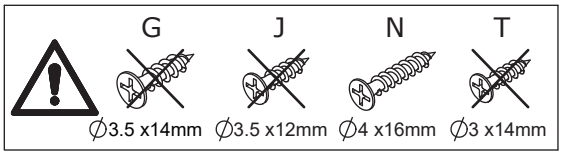

Install caster (M) to panel 11 using screw (N).

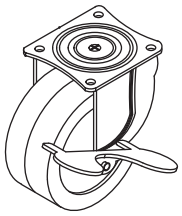

Movable

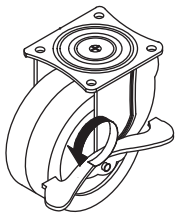

Immovable

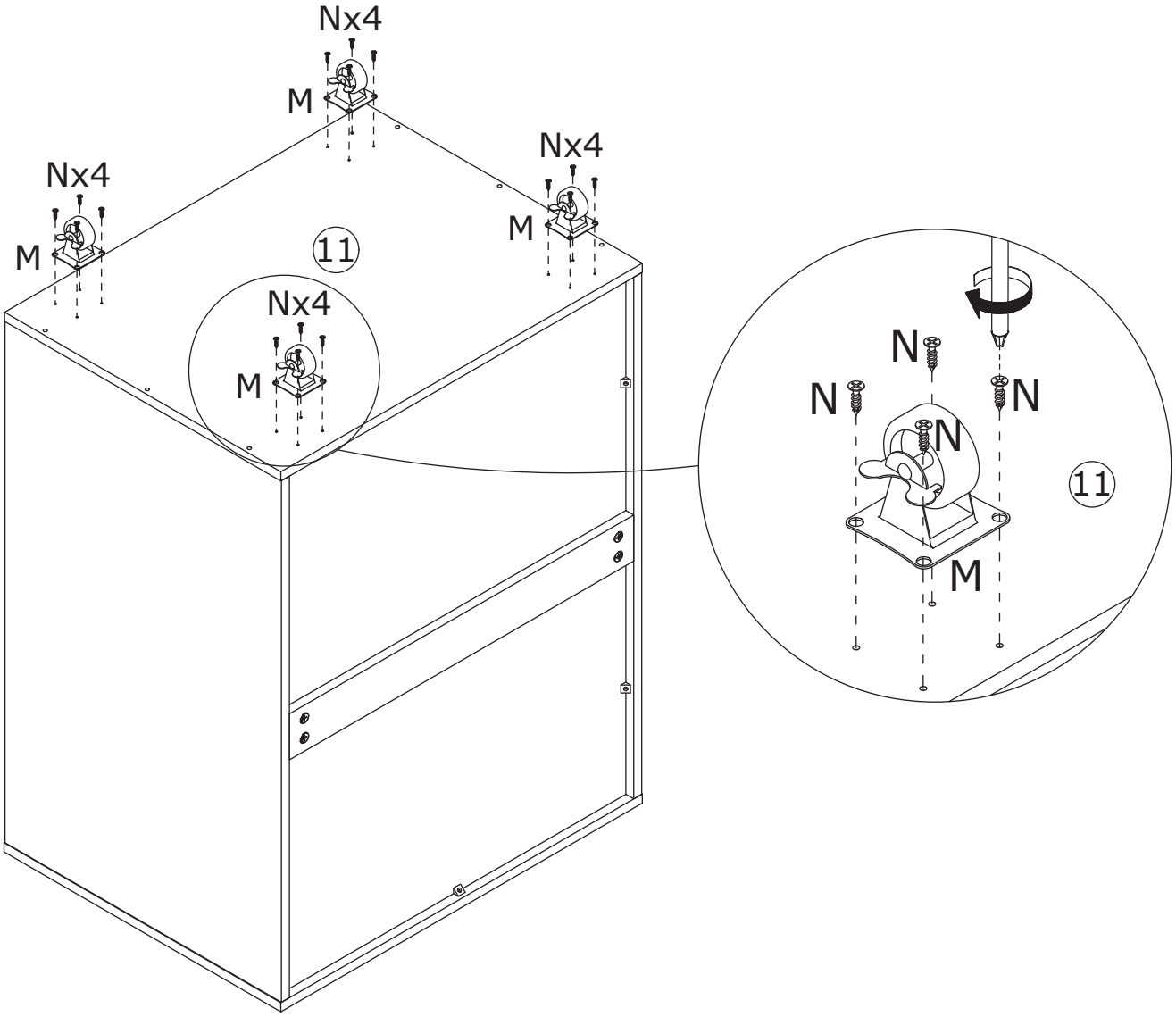

12

B x 25	C x 25	
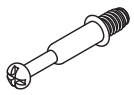 ∅6 x 35 mm		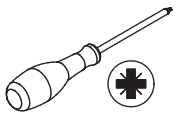

Install plug (C) onto panels 15, 16, and 22, then screw self-tapping rod (B) into panels 15, 16, and 22.

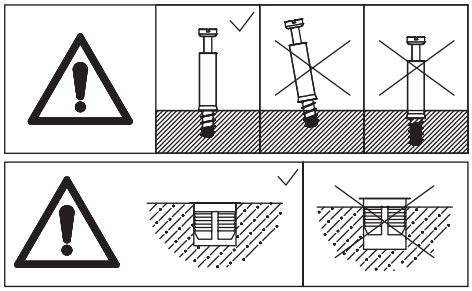

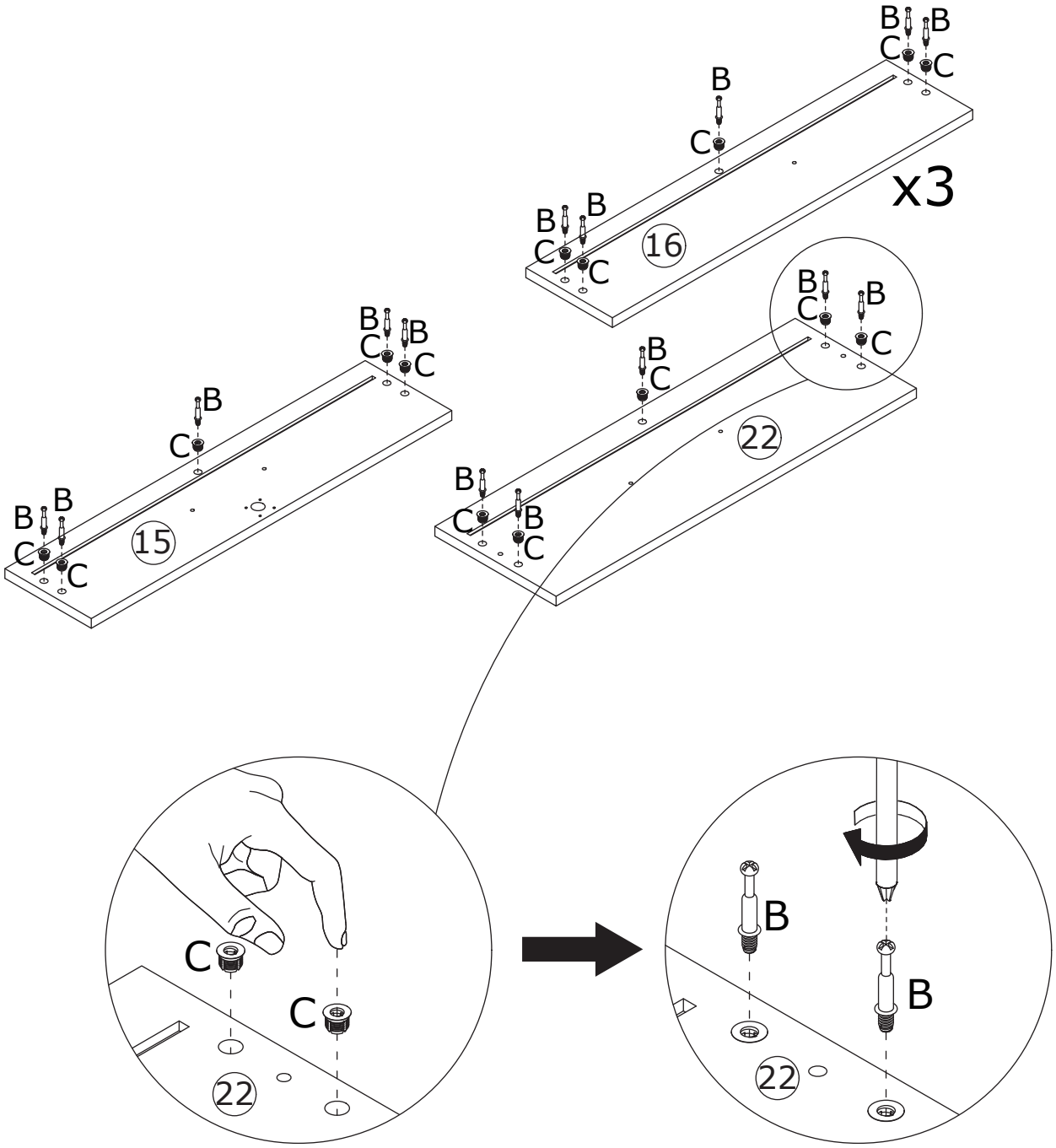

13

A x 25	D x 2	
	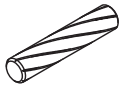	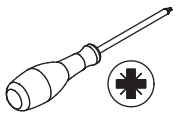
∅15 x 10 mm	∅6 x 30 mm	

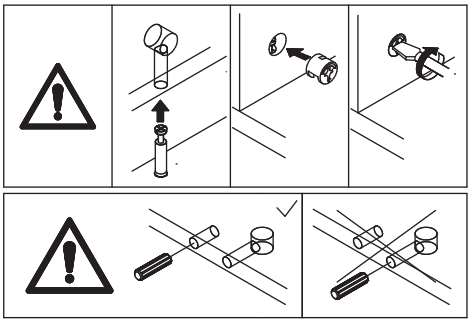

Connect panels 17, 18, and 21 to panels 15 and 16, then tighten by turning cam lock (A) clockwise.

Insert wooden dowel (D) to panels 23 and 24. Connect panels 23, 21, and 24 to panel 22, then tighten by turning cam lock (A) clockwise.

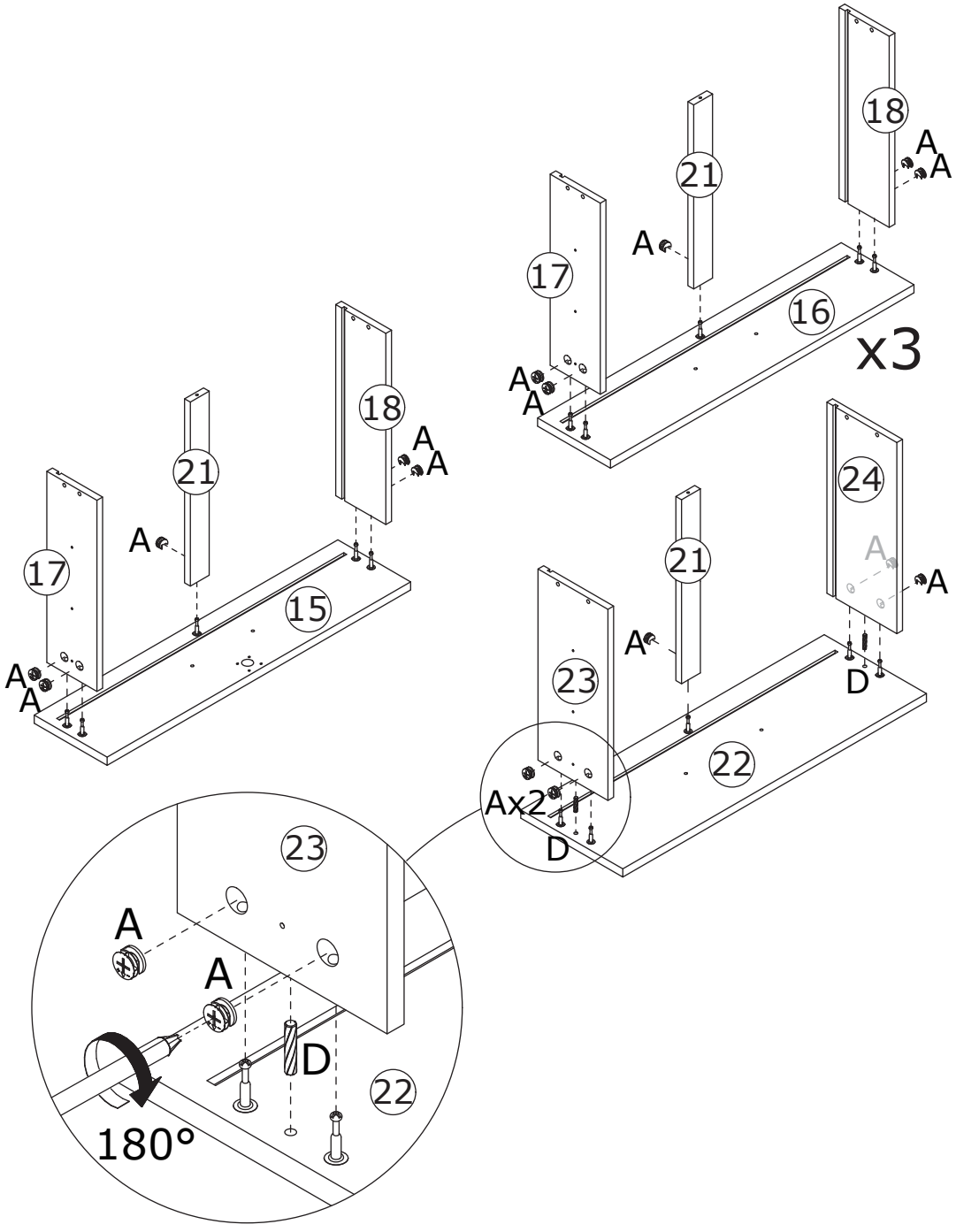

14

Insert panel 20 into the available grooves.

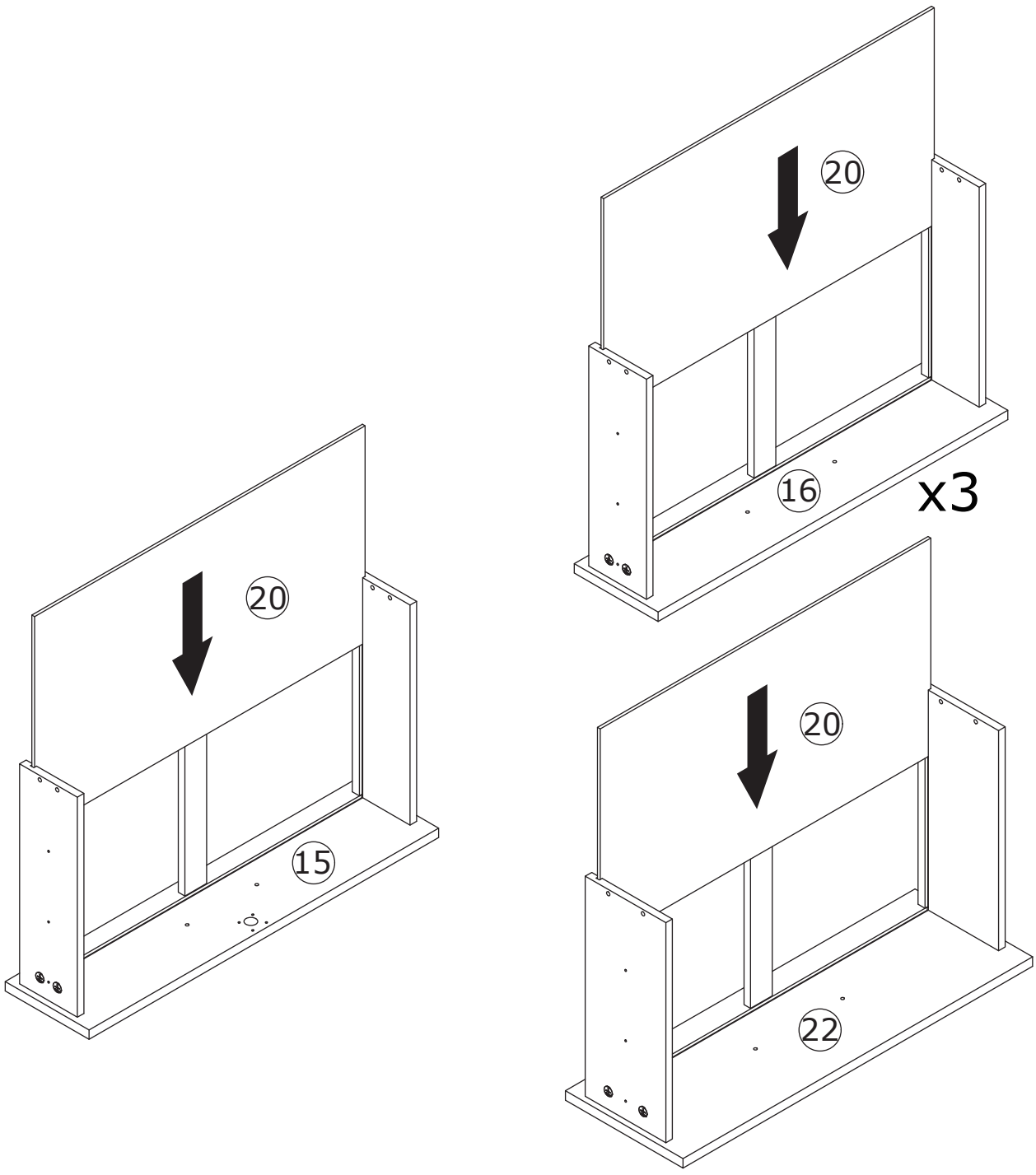

15

E x 25

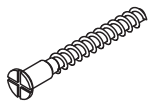

∅5 x 40 mm

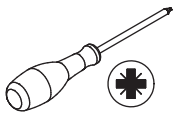

Connect panels 17, 21, and 18 to panel 19 using screw (D).
Connect panels 21, 23, and 24 to panel 25 using screw (D).

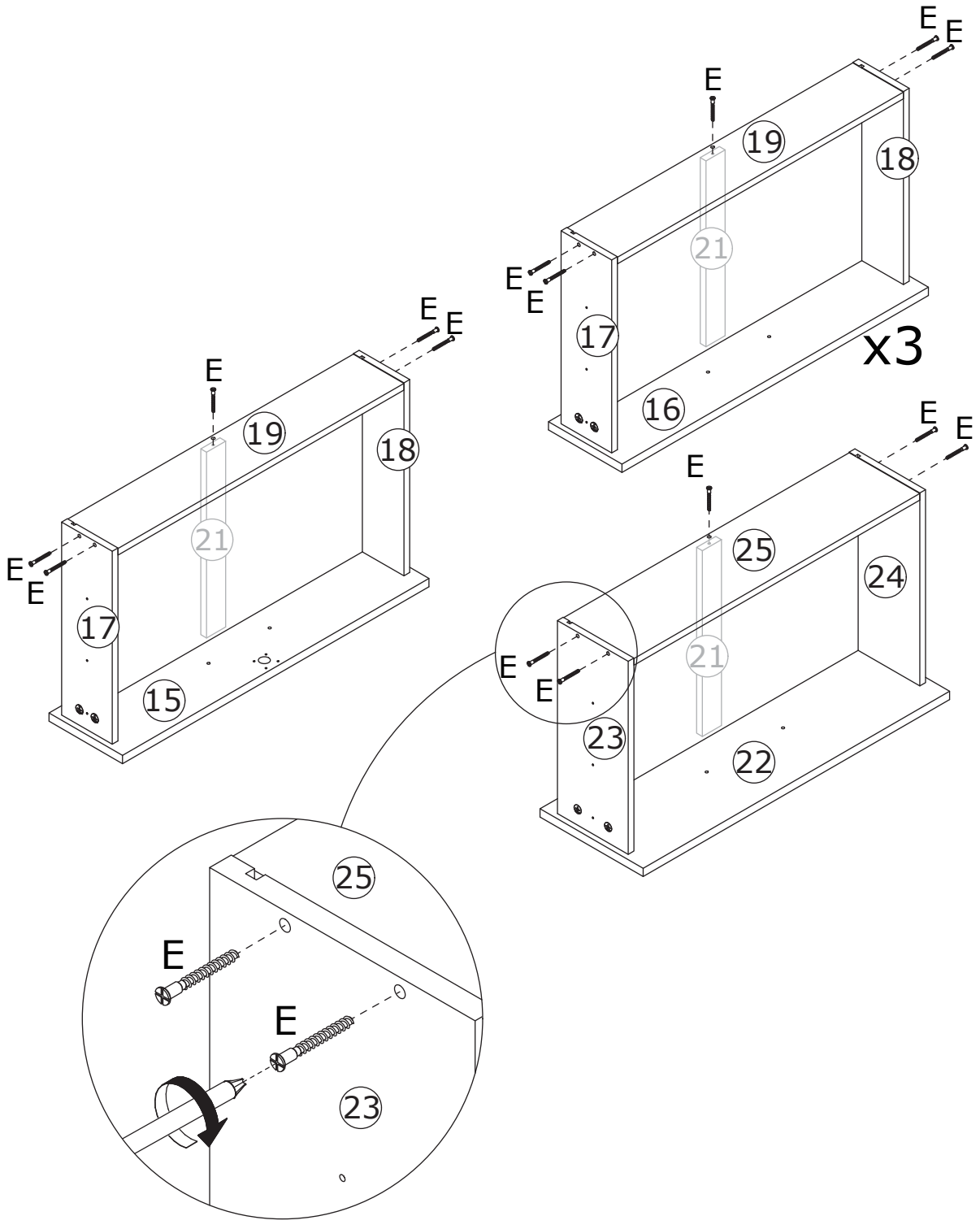

16

H x 5	J x 30	
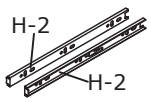 300mm	 ∅3.5 x 12 mm	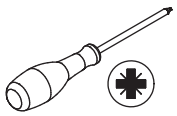

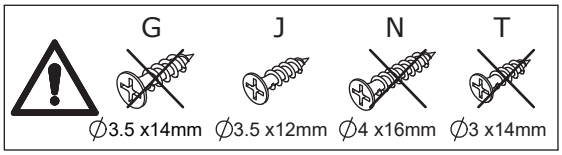

Secure slide rail (H-2) to panels 17, 18, 23, and 24 using screw (J).

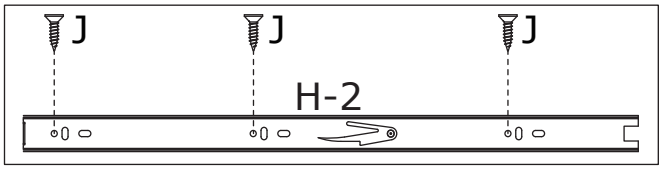

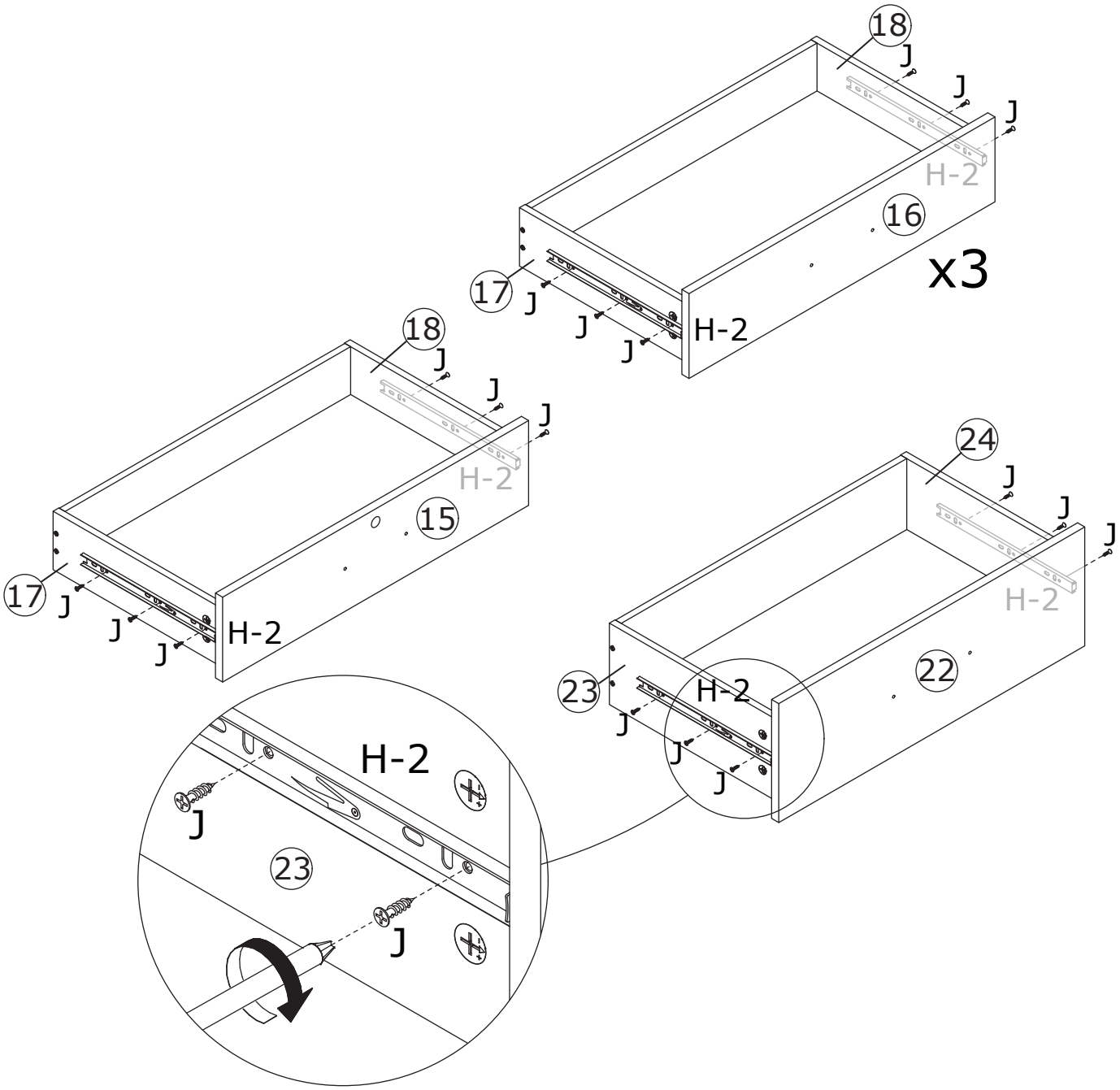

17

K x 5	L x 10	
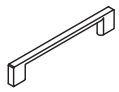	 ∅4 x 18 mm	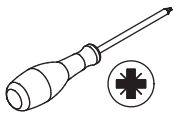

Secure handle (K) to panel 15, 16, and 22 using screw (L).

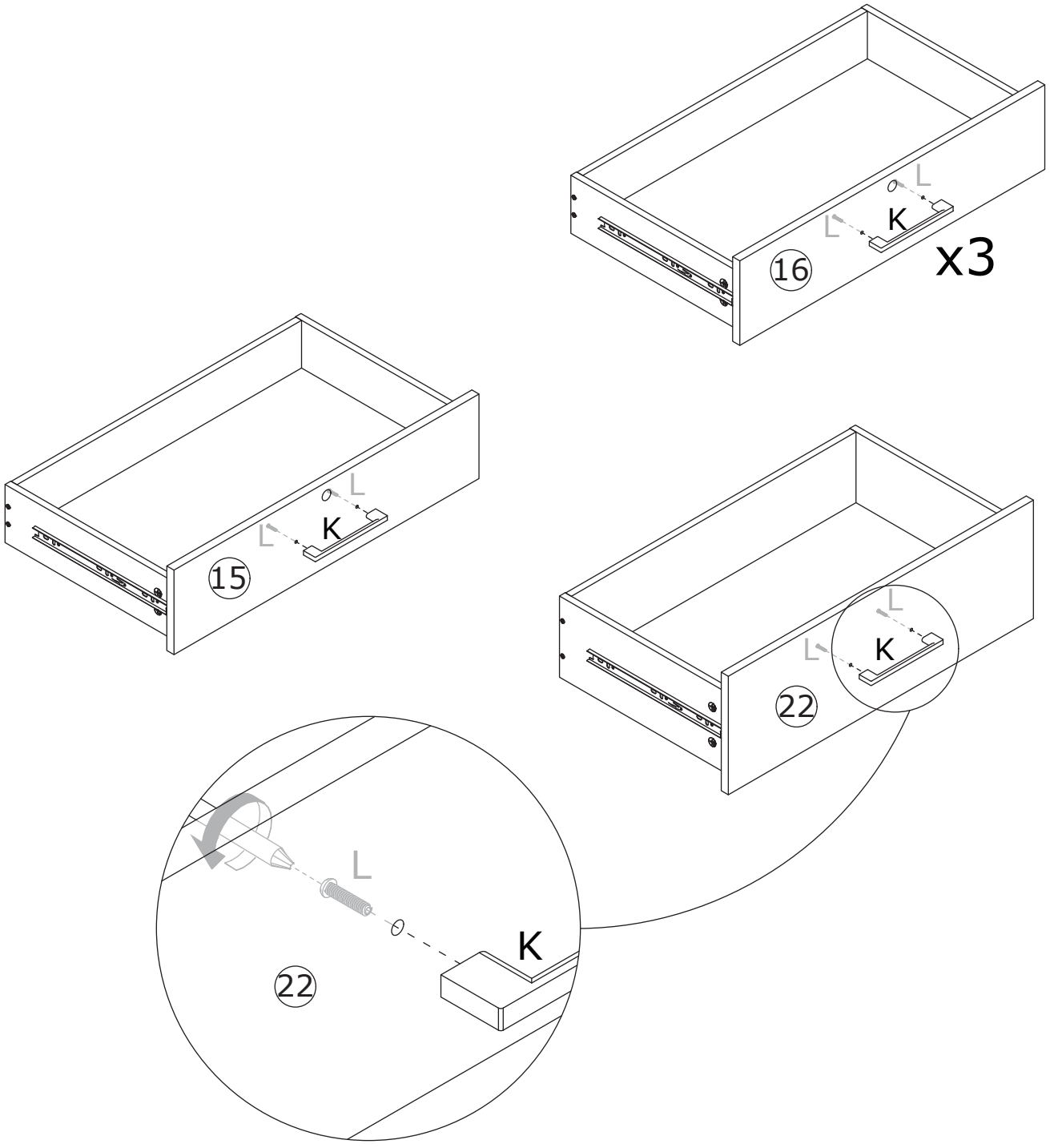

18

P x 1

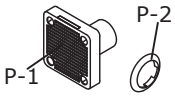

Q x 4

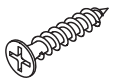

∅3.5 x 20 mm

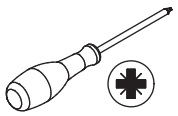



Q

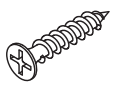

∅3.5 x 20 mm

Y

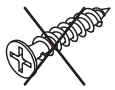

∅3.5 x 25 mm

First install part (P-1) onto panel 15 using screw (O).
Then install part (P-2) onto part (P-1).

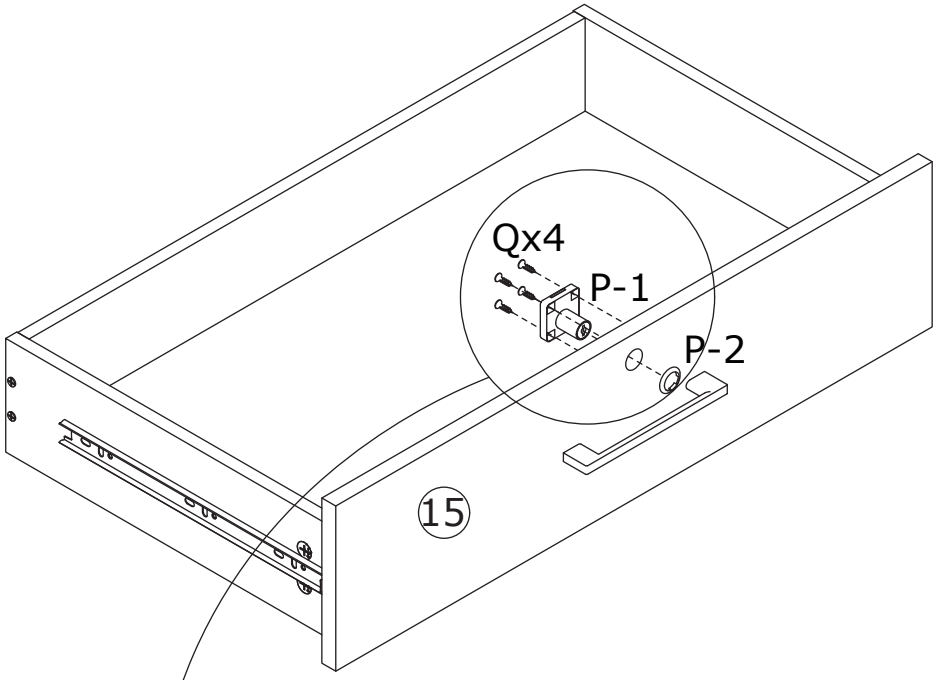

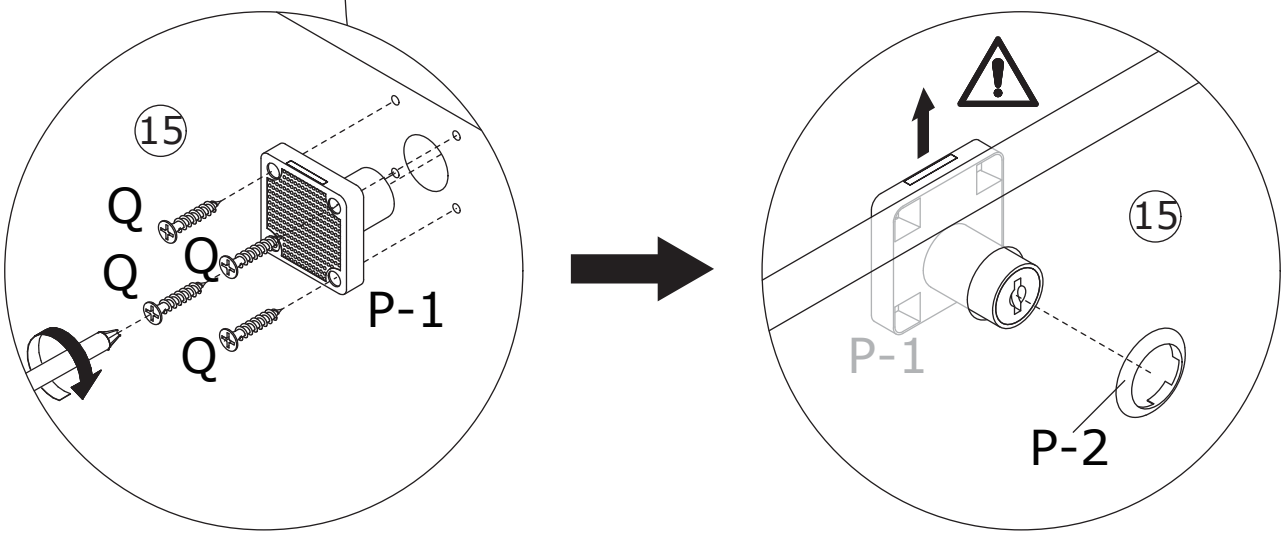

19

Flip the cabinet body and assemble the drawers onto the main body.

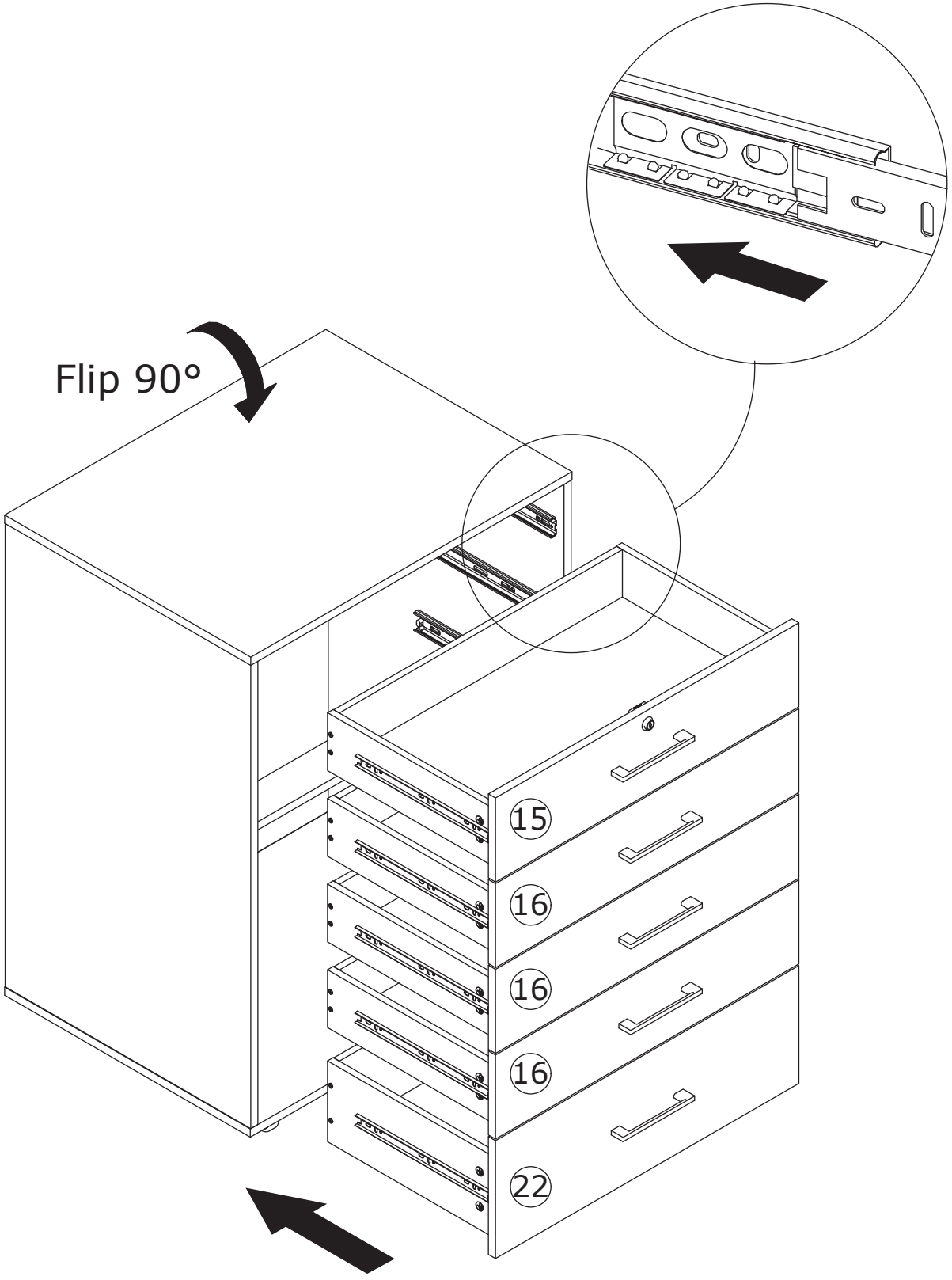

20

P x 1



Turn key (P-3) clockwise to lock panel 15.

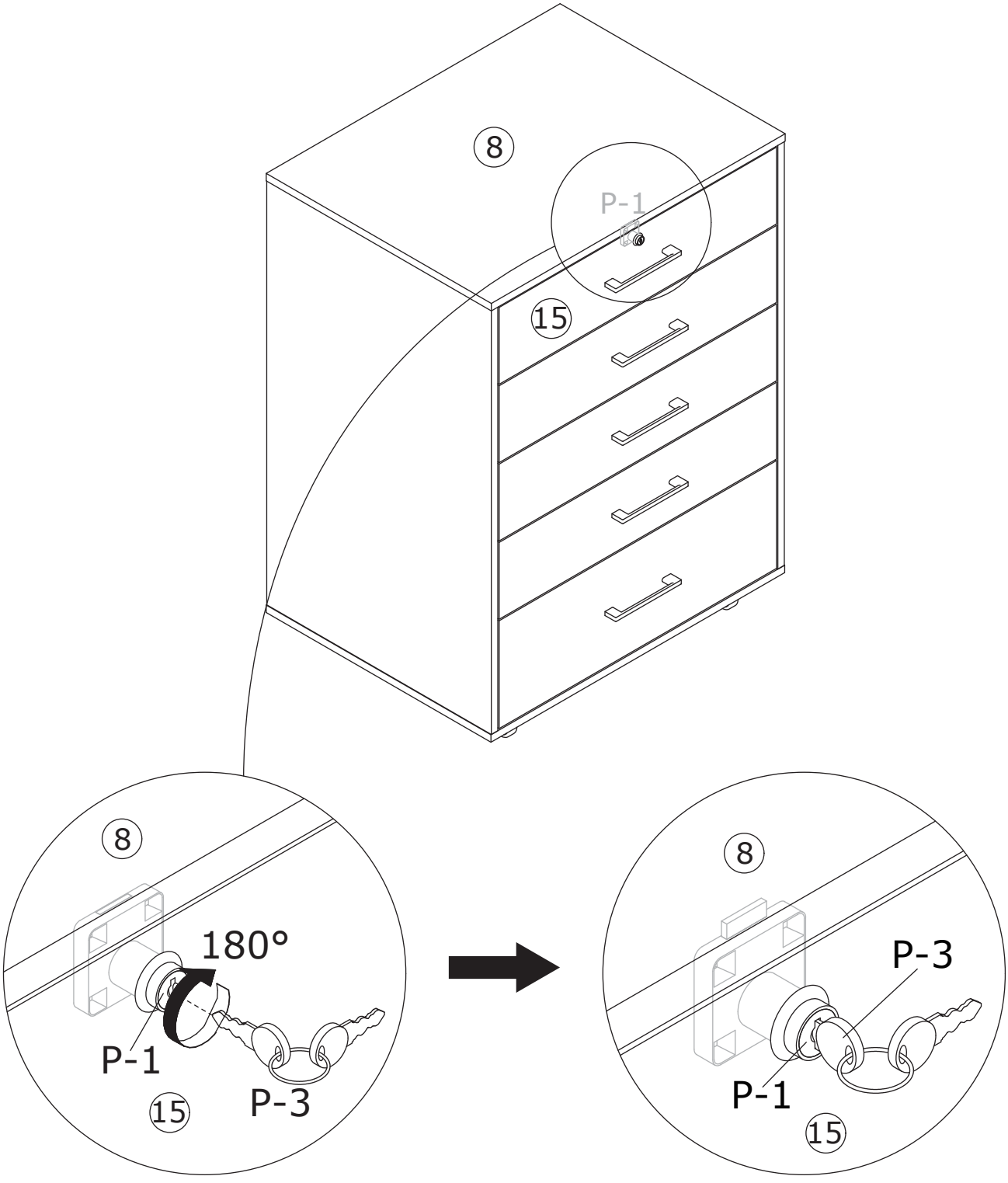

21

B x 4	C x 4	T x 2	U x 1	
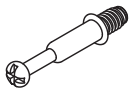				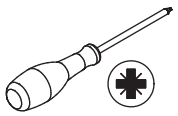
∅6 x 35 mm		∅3 x 14 mm		

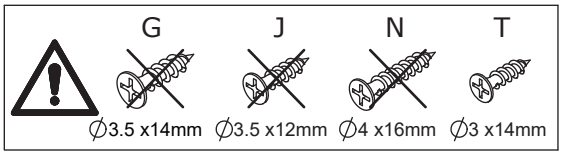

Install plug (C) onto panels 1 and 4, then screw self-tapping rod (B) into panels 1 and 4.
Secure part (U) to panel 4 using screw (T).

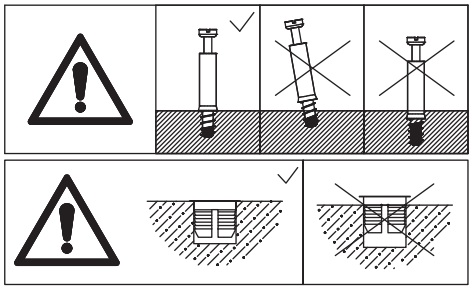

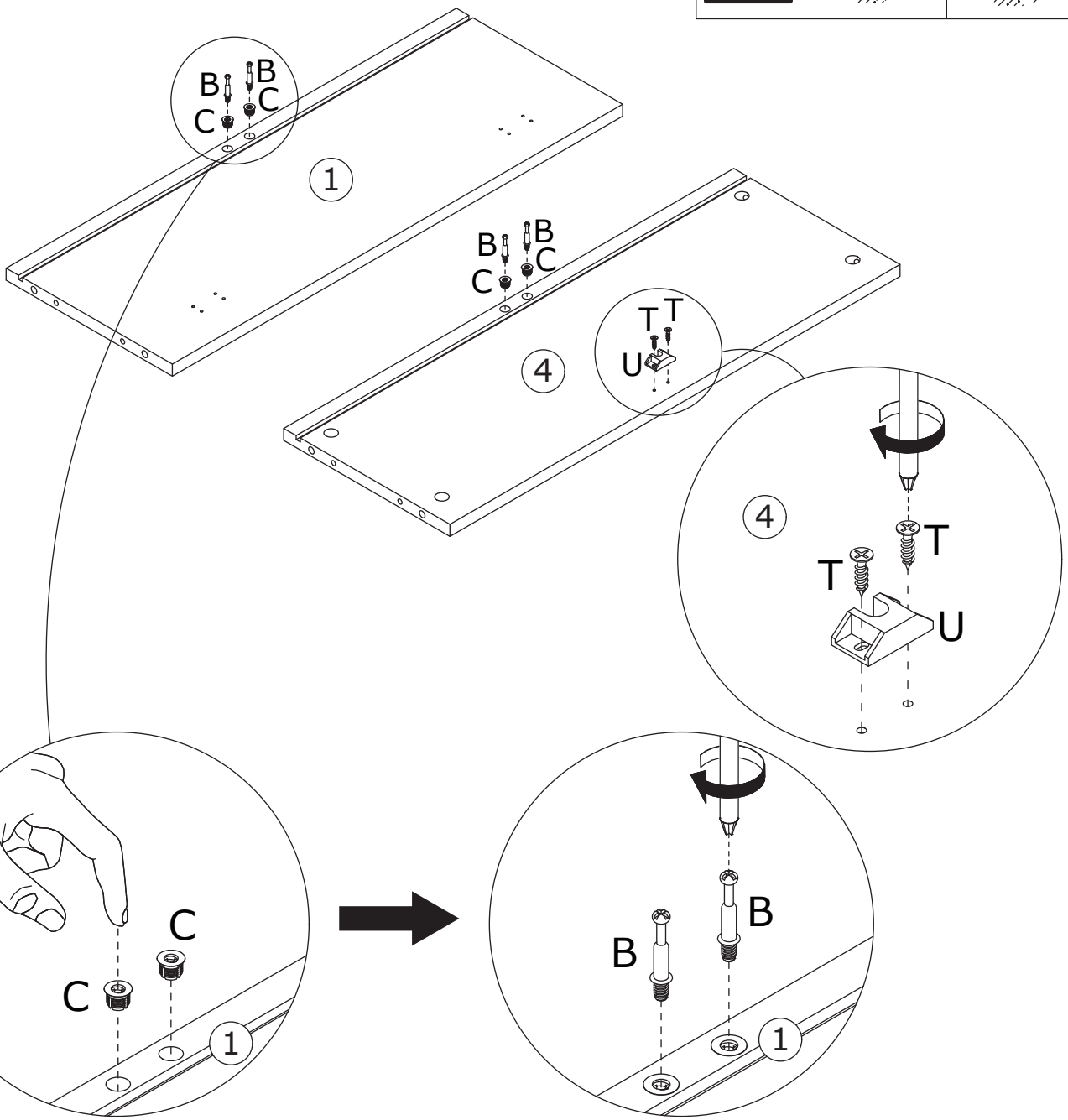

22

A x 4



∅15 x 10 mm

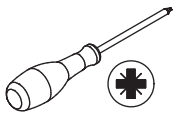

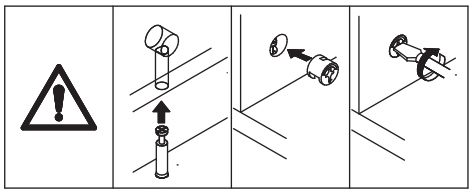

Connect panels 1 and 4 to panel 6, then tighten by turning cam lock (A) clockwise.

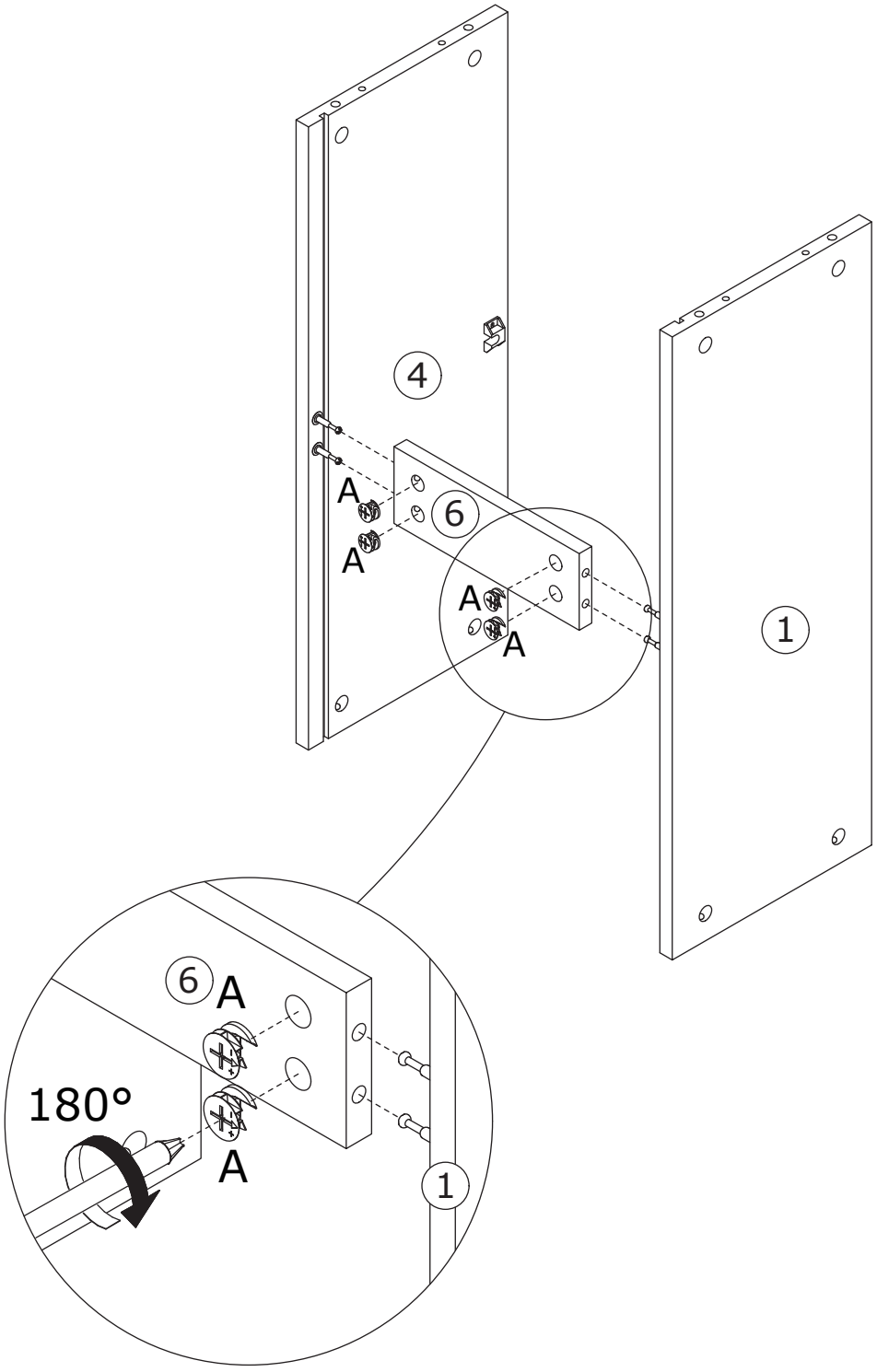

23



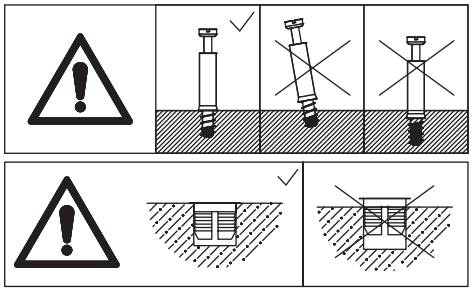

Install plug (C) onto panels 2 and 3, then screw self-tapping rod (B) into panels 2 and 3.

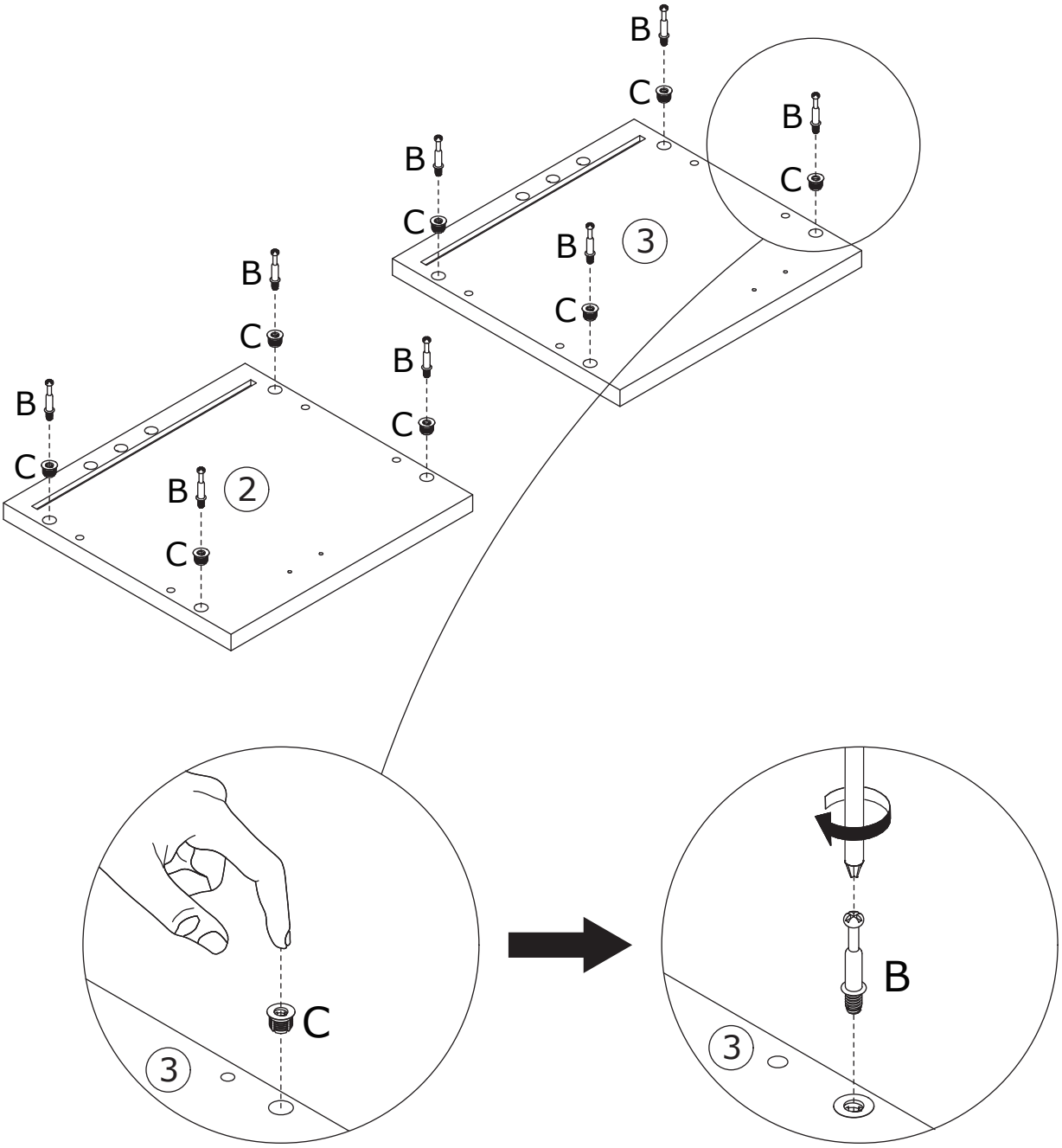

24

A x 4	D x 4	
	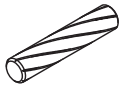	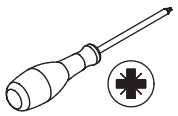
∅15 x 10 mm	∅6 x 30 mm	

Connect panel 3 to panels 1 and 4 using wooden dowel (D), then tighten by turning cam lock (A) clockwise.

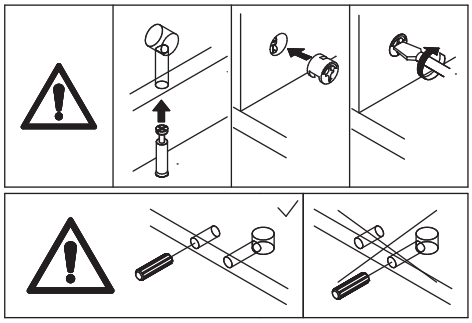

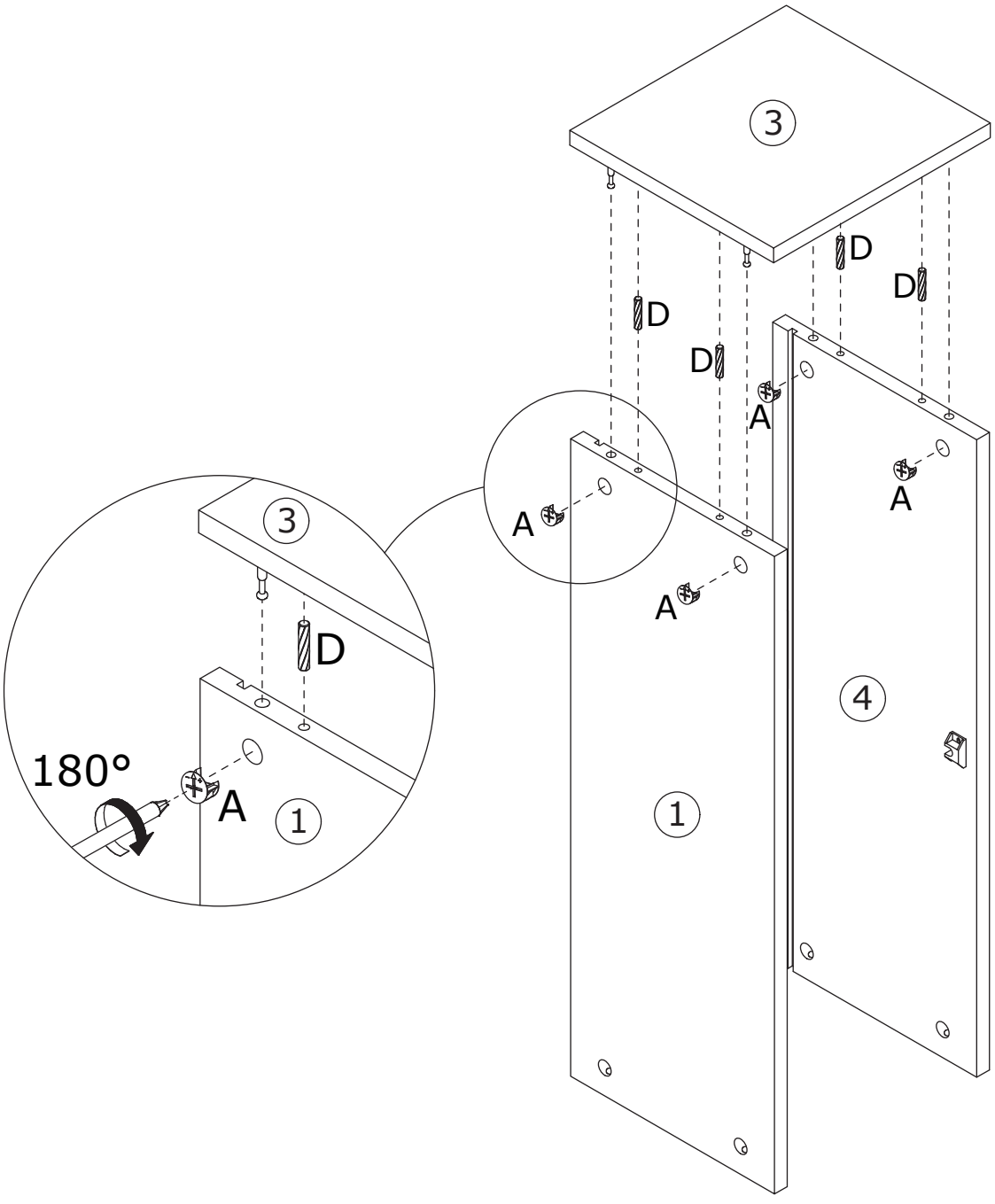

25

Flip the cabinet body, then insert panel 5 into the available grooves.

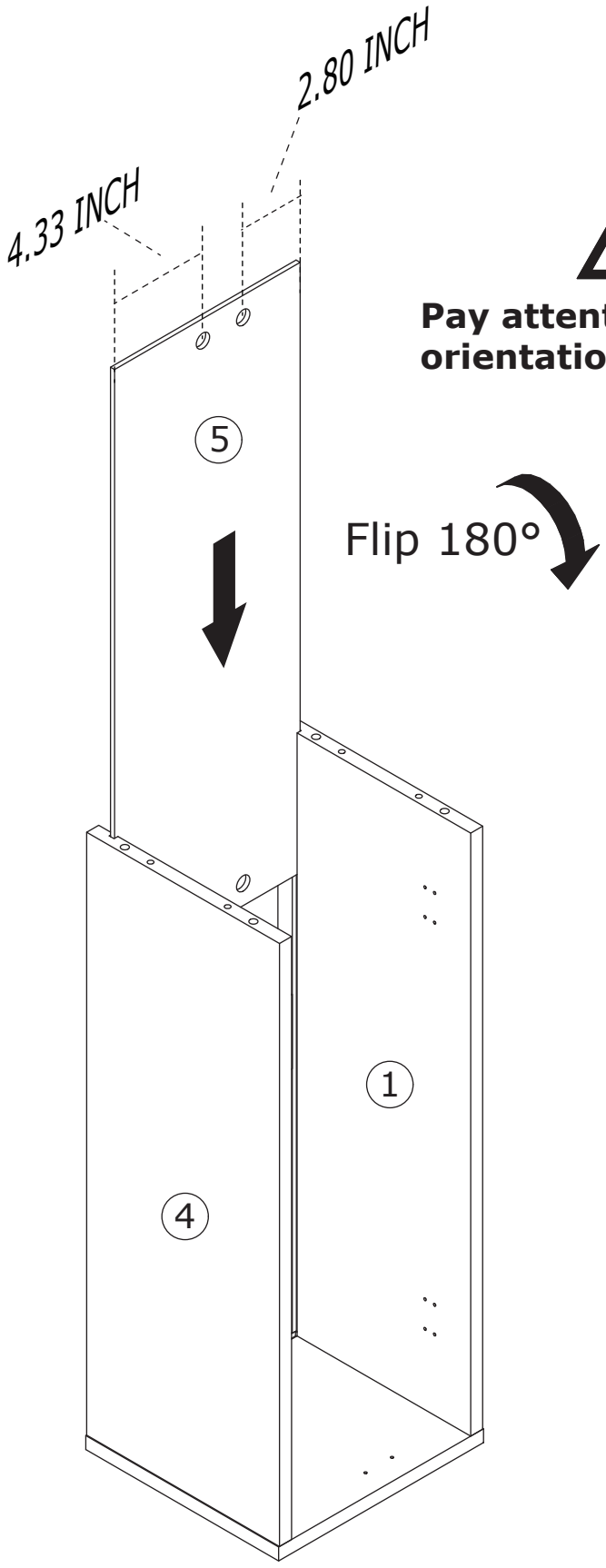

Pay attention to the installation orientation of Panel 5.

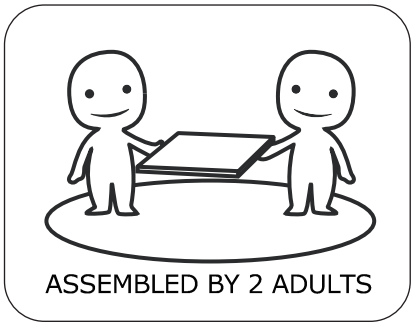

26

A x 4	D x 4	
	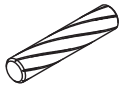	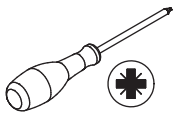
∅15 x 10 mm	∅6 x 30 mm	

Connect panel 2 to panels 1 and 4 using wooden dowel (D), then tighten by turning cam lock (A) clockwise.

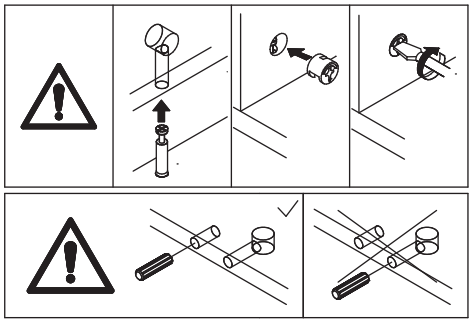

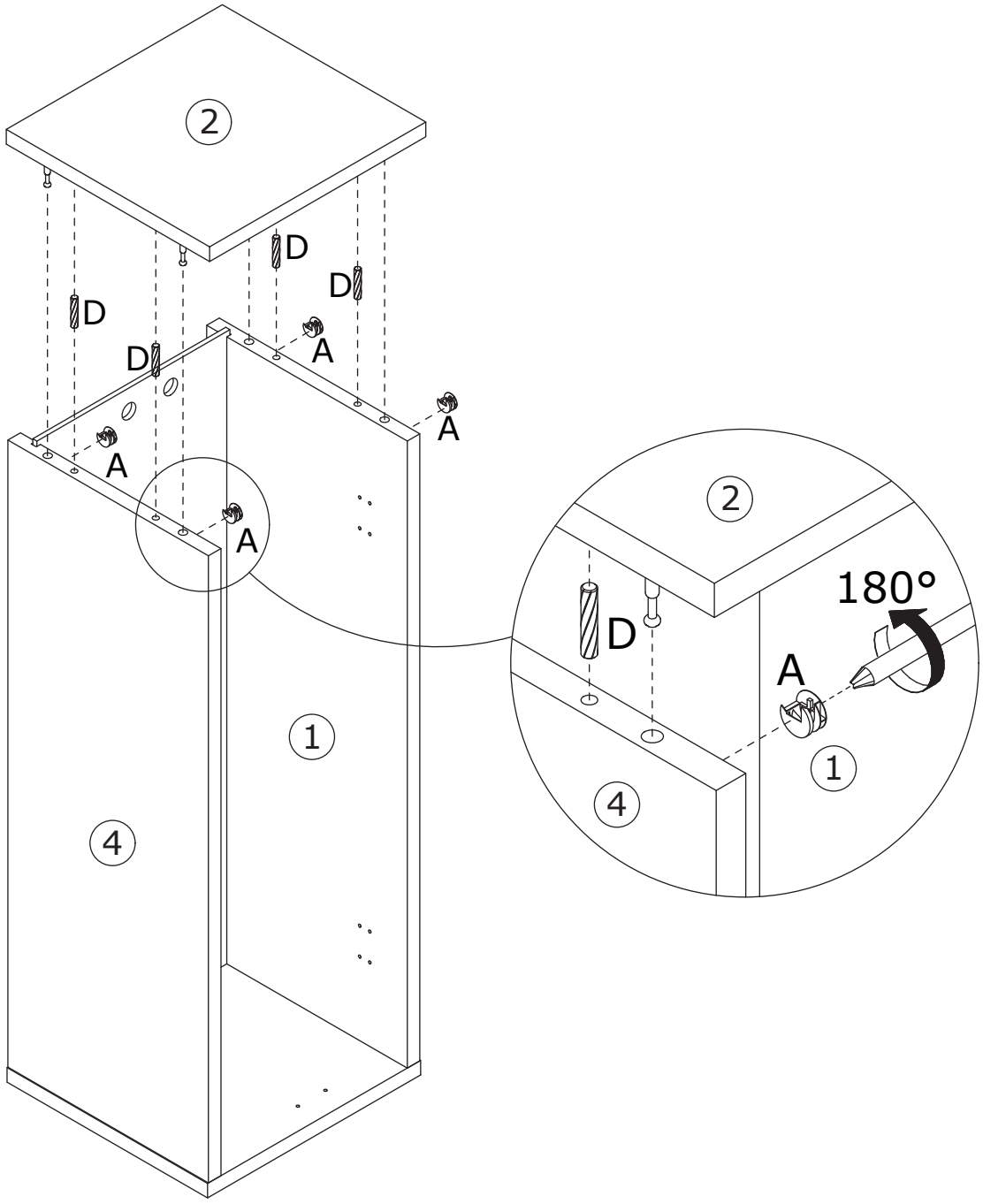

27

F x 2	G x 4	
	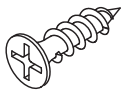 ∅3.5 x 14 mm	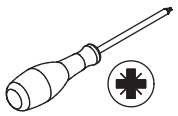

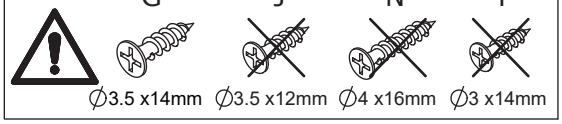

Secure hinge (F) to panel 7 using screw (G).

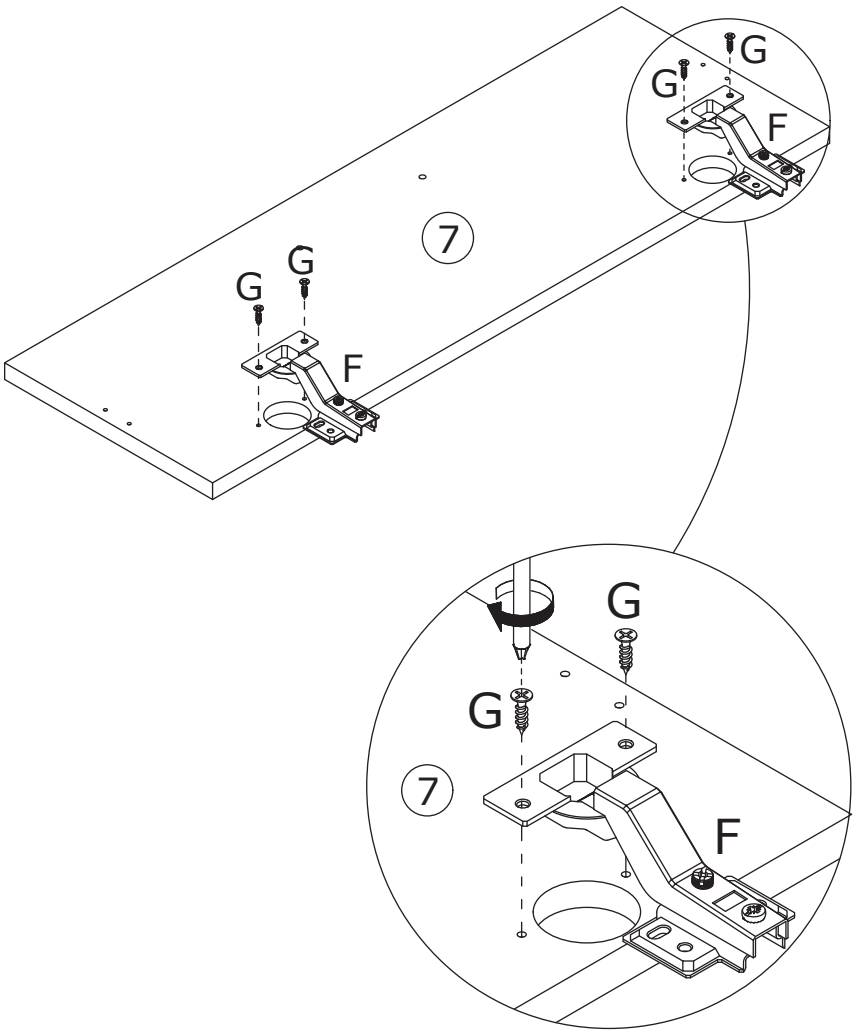

28

N x 8

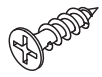

∅4 x 16 mm

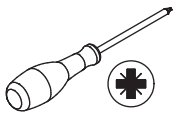

Attach panel 7 to panel 1 via hinges using screw (N).

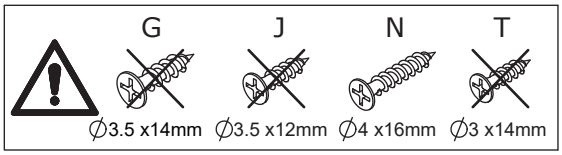

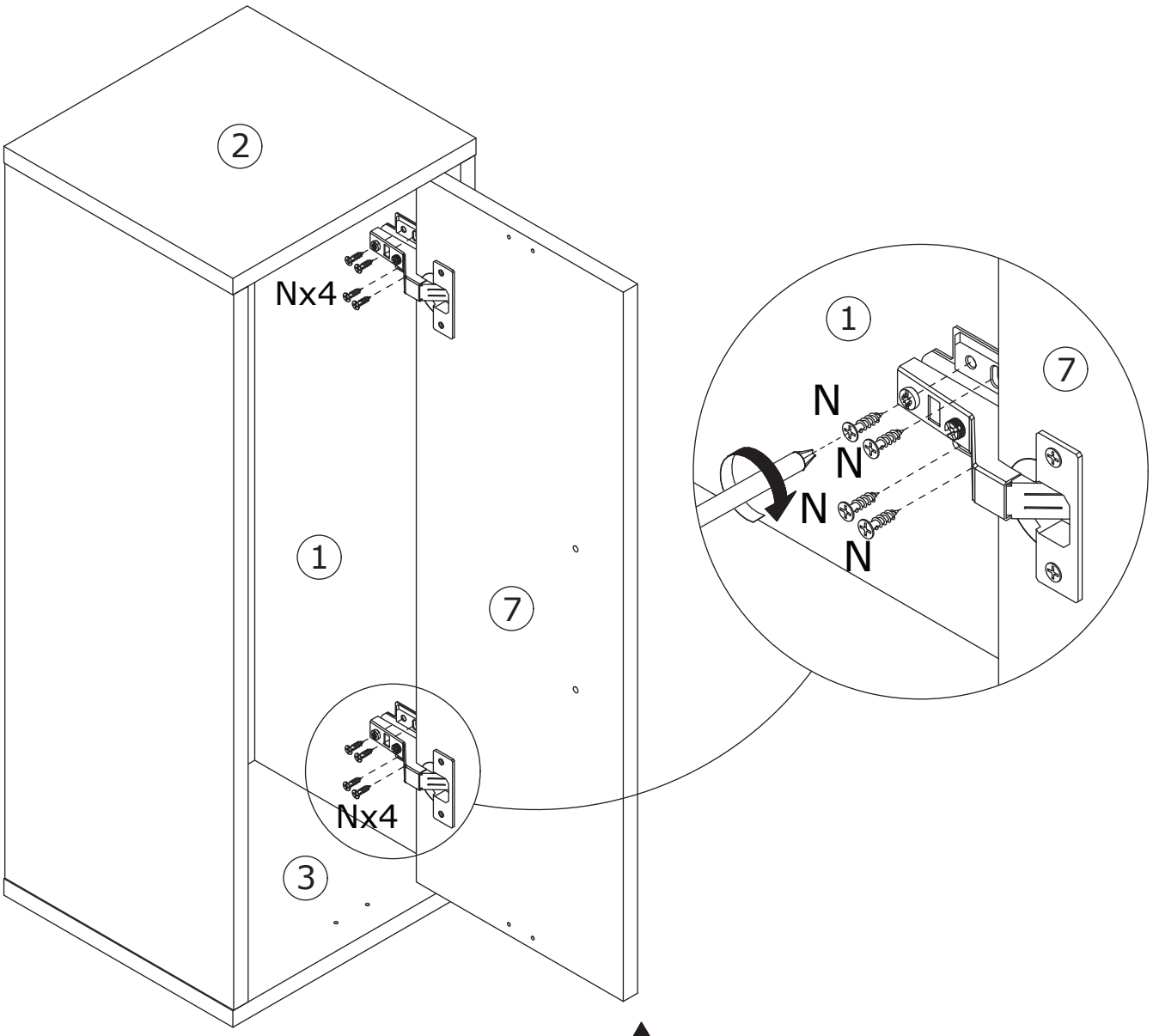

Be careful not to let the cabinet tip over

29

Left

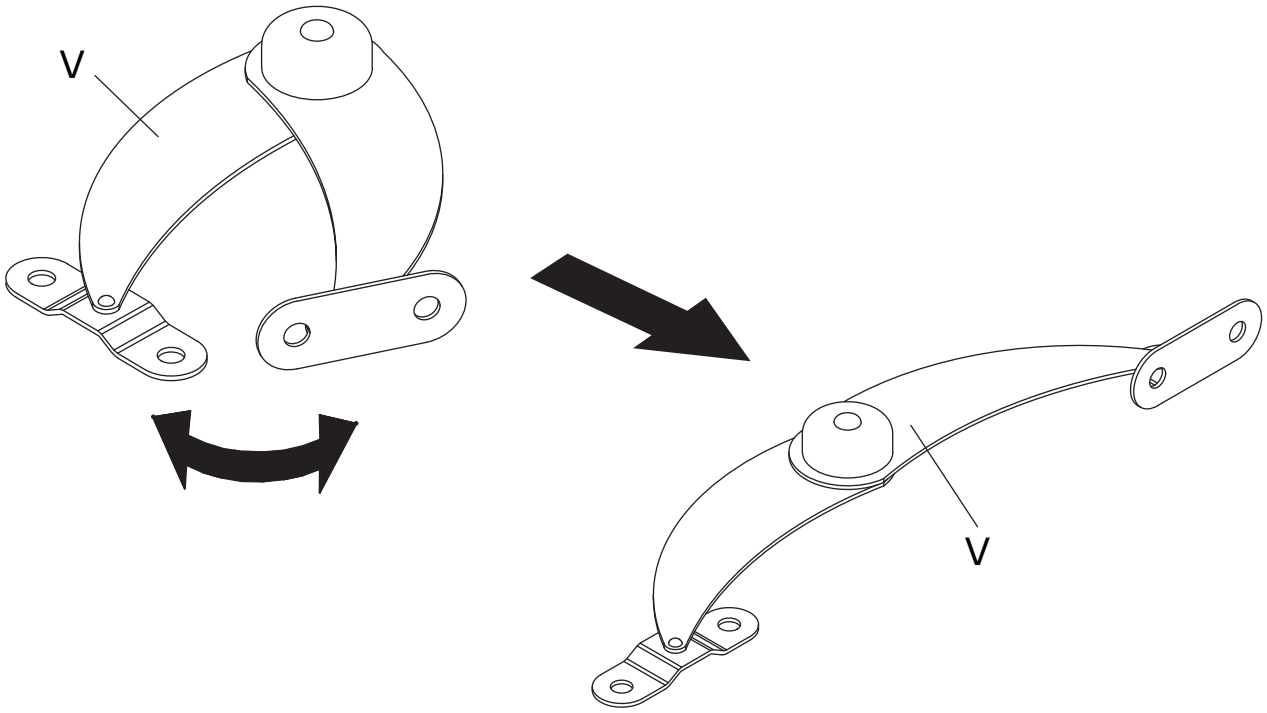

Right

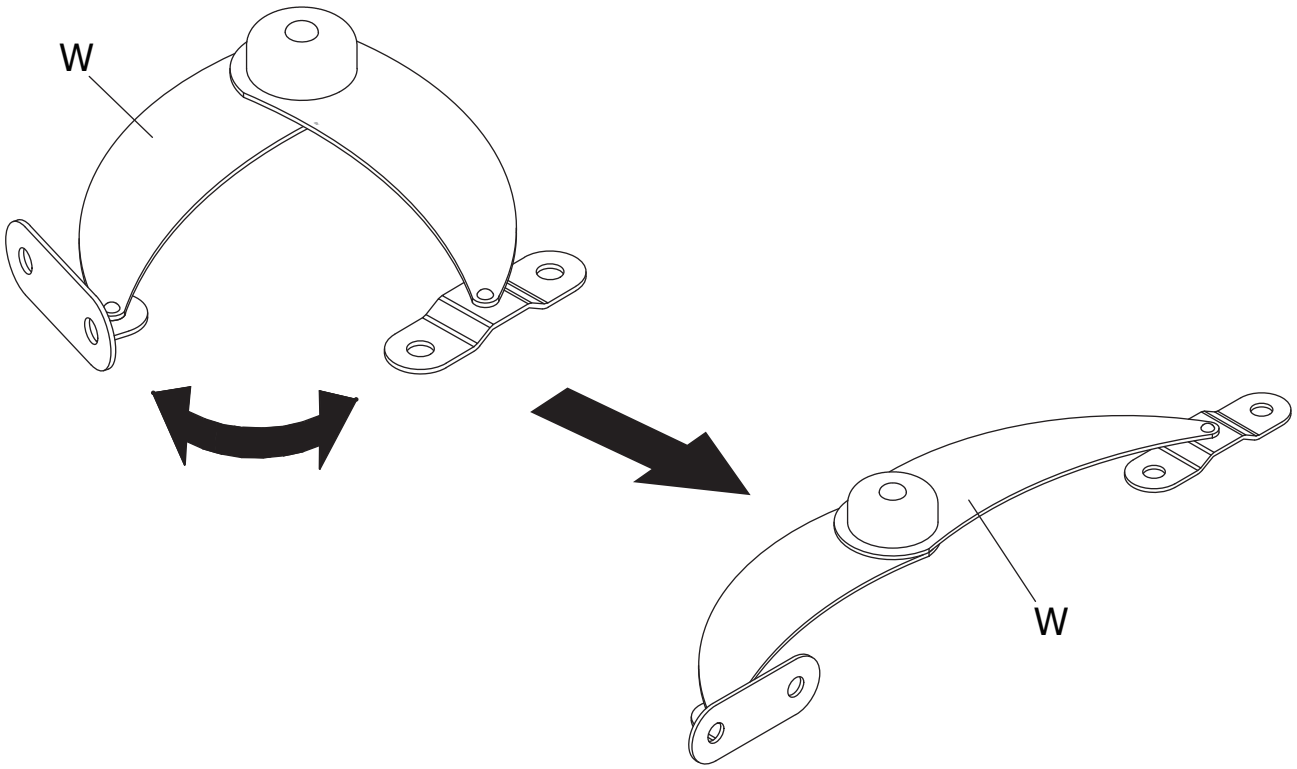

30

G x 8	V x 1	W x 1	
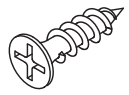 ∅3.5 x 14 mm	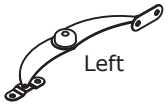 Left	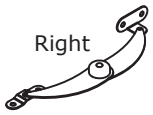 Right	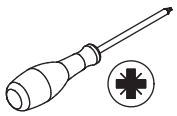

Secure hinge (W) and (V) to panels 2, 7, and 3 using screw (G).

	G	J	N	T
				
	∅3.5 x14mm	∅3.5 x12mm	∅4 x16mm	∅3 x14mm



Be careful not to let the cabinet tip over.

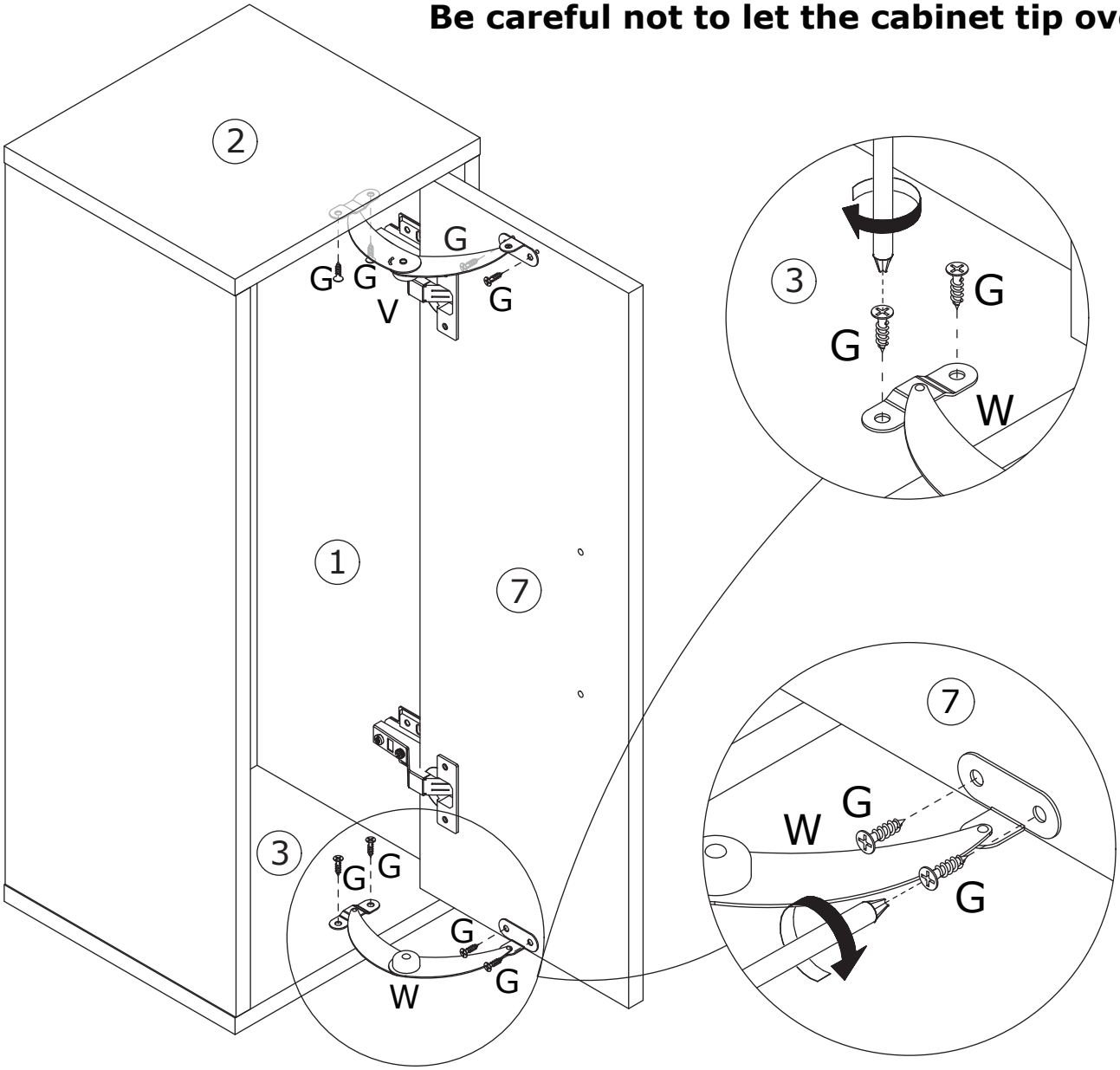

31

K x 1	L x 2	
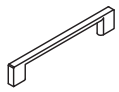	 ∅4 x 18 mm	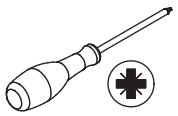

Secure handle (K) to panel 7 using screw (L).

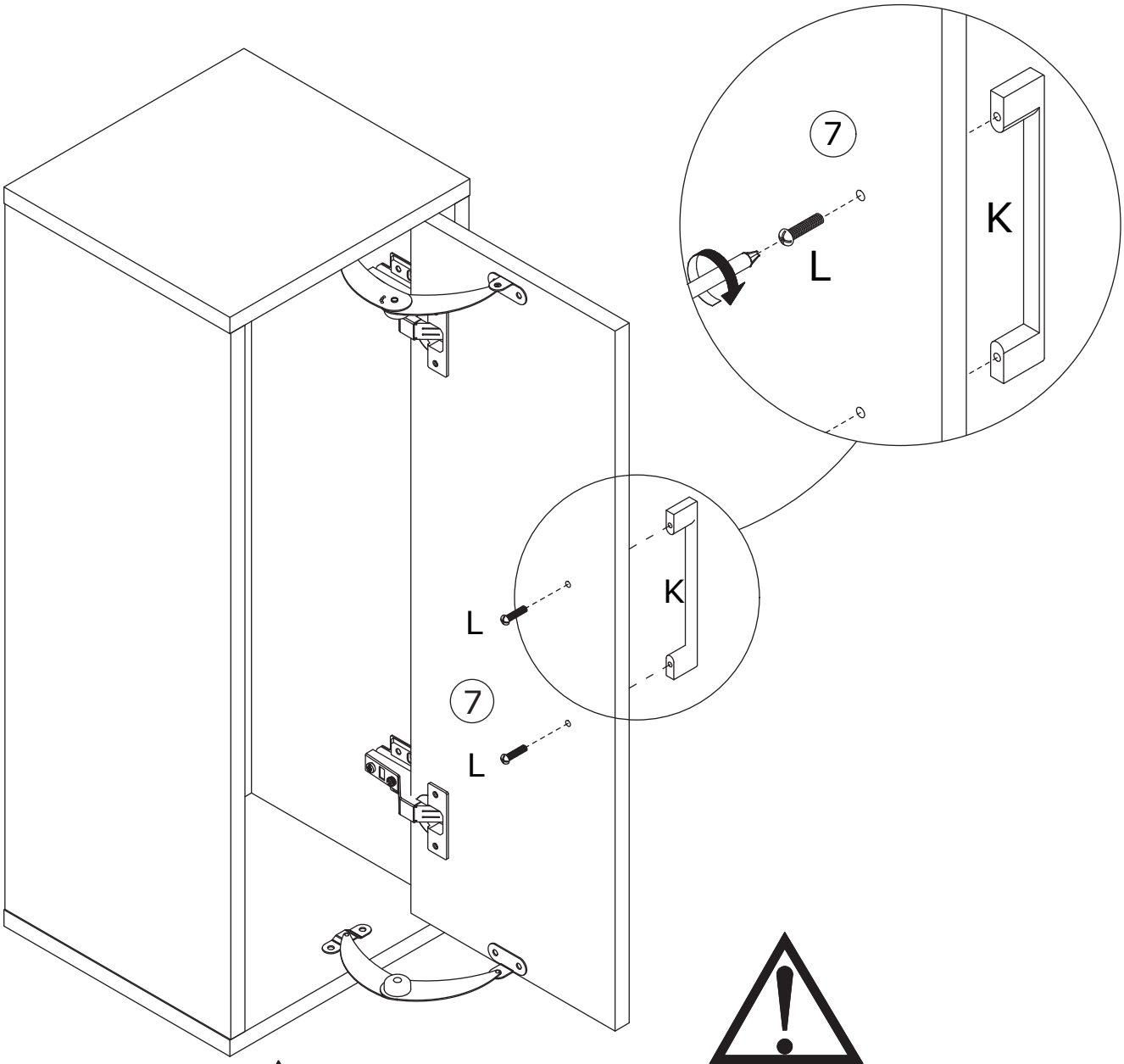

Once installation is complete, please close the door.

Be careful not to let the cabinet tip over

32

S x 6	T x 6	
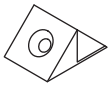	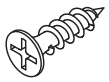 ∅3 x 14 mm	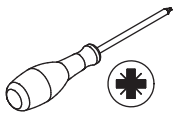

Flip the cabinet body, insert clip (S) into the available slots, then secure them with screw (T).

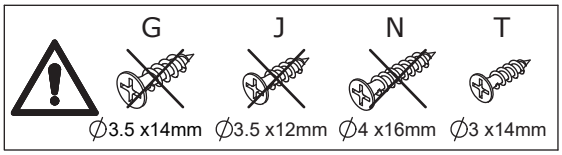

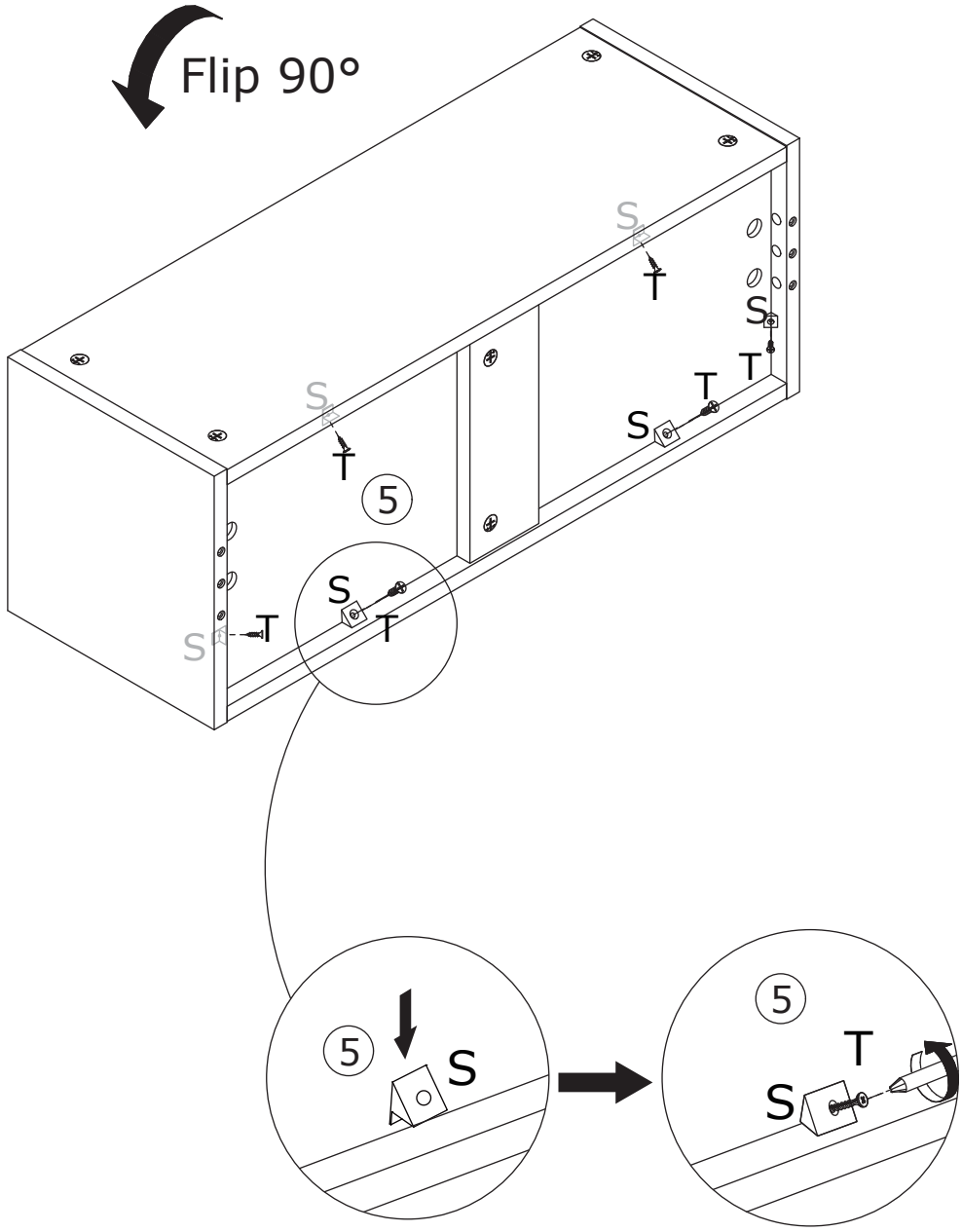

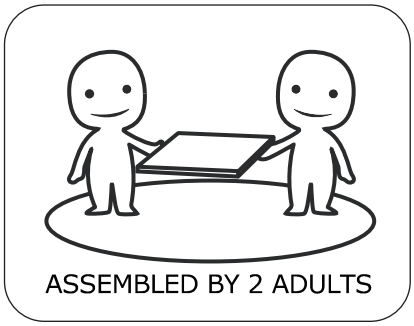

X-1

Function of this knob:
Adjust the front-rear distance of part (X-1).

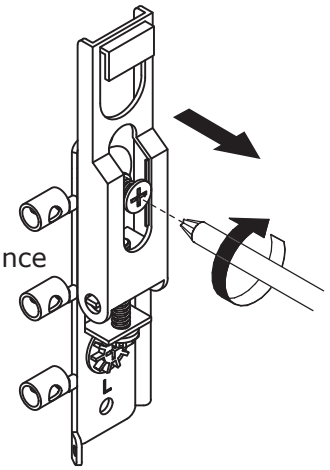

OR

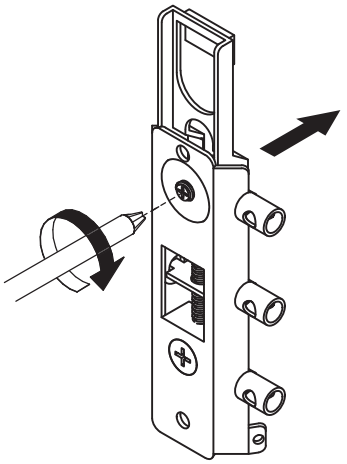

Left

Function of this knob:
Adjust the vertical distance of part (X-1).

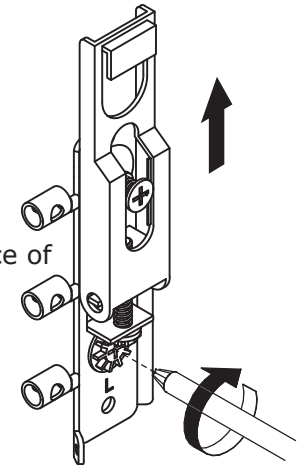

OR

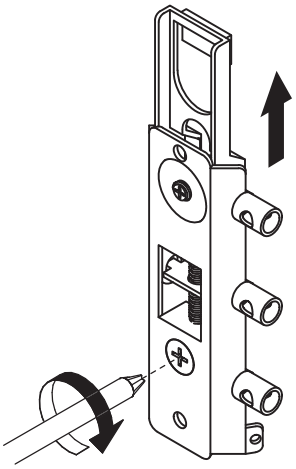

Turning the screwdriver in the opposite direction will adjust part (X-1) and part (X-2) in opposite directions.

X-2

Function of this knob:
Adjust the front-rear distance of part (X-2).

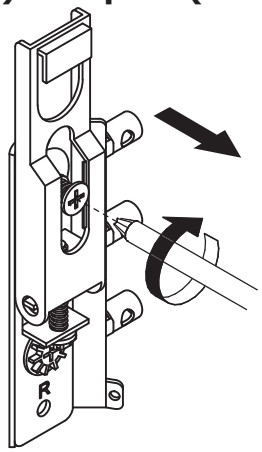

OR

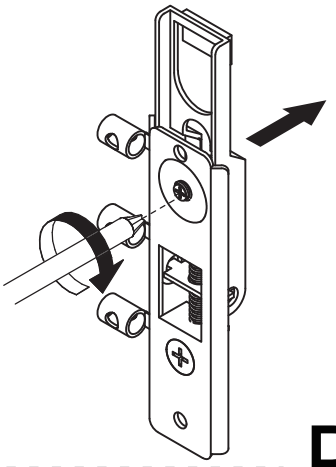

Right

Function of this knob:
Adjust the vertical distance of part (X-2).

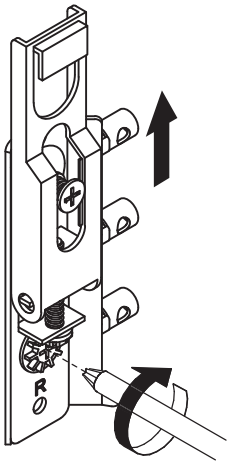

OR

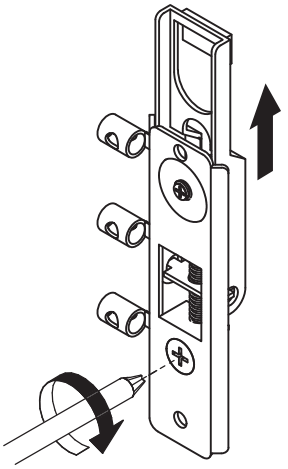

33

X x 1	X x 1	Y x 8	
X-1(Left)	X-2(Right)	∅3.5 x 25 mm	

Connect part (X-1) to panel 3, connect part (X-2) to panel 2, then secure them using screw (Y).

	Q	Y
	∅3.5 x 20 mm	∅3.5 x 25 mm

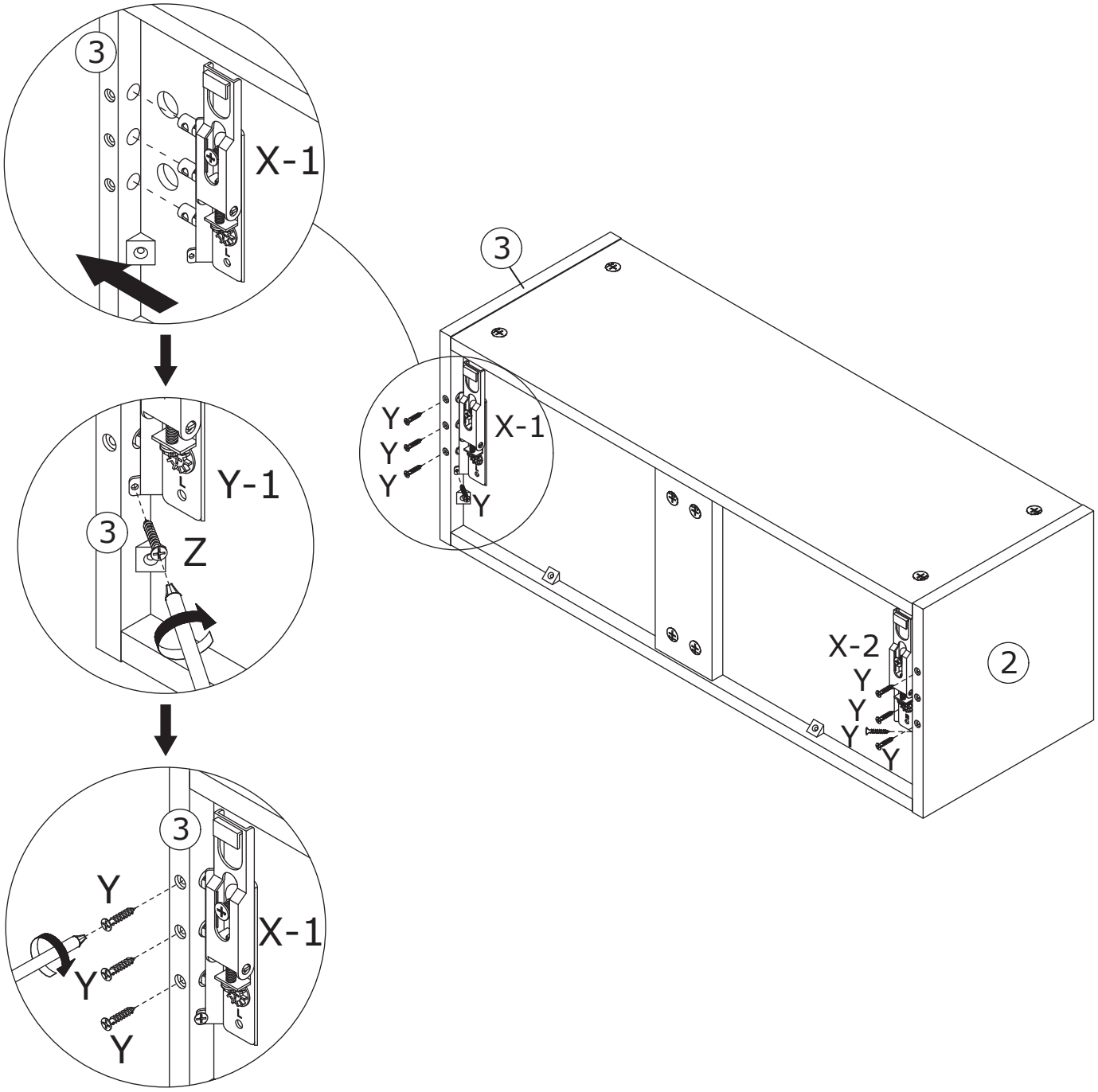

34

BB x 4	CC x 4	DD x 2	EE x 1	
 ∅6 x 12 mm		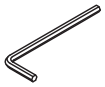		

Connect the two pieces of part (14) using screw (BB) and nut (CC).

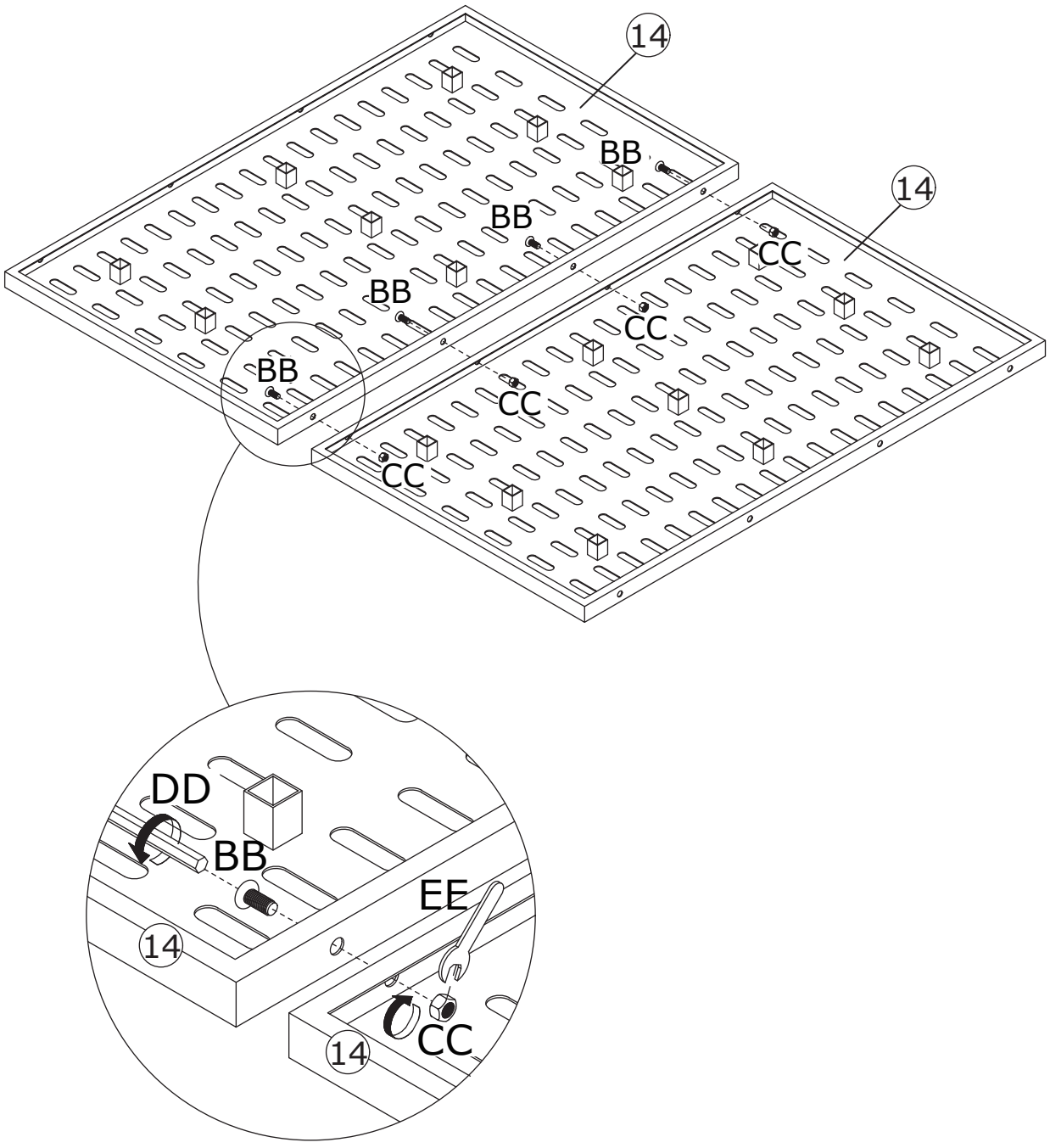

Choose the appropriate installation method based on the material of your wall.

- If it is a solid wall, please select Option A.
- If it is not a solid wall, please select Option B.

Option A

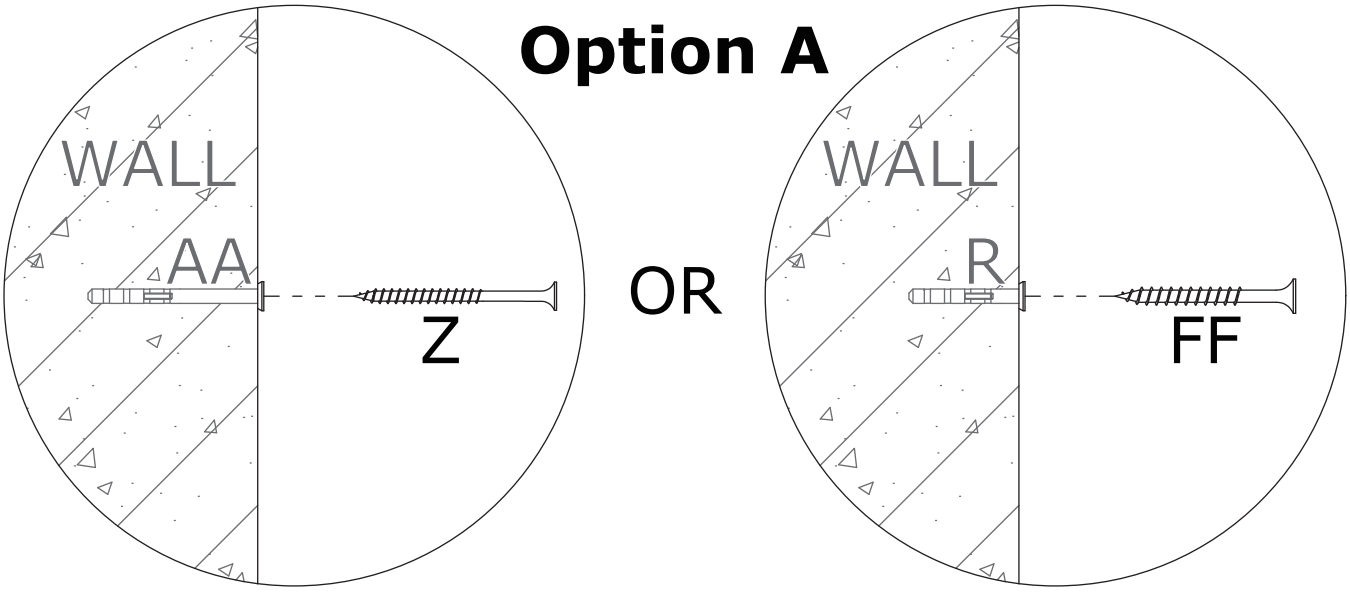

Option B

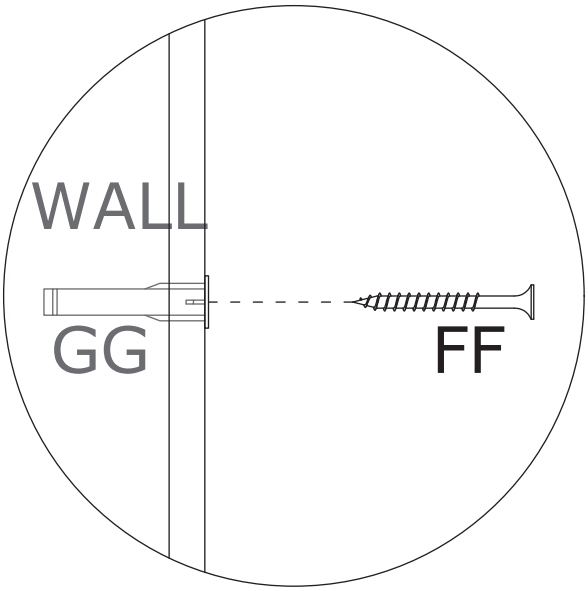

35

R x 12	FF x 12	
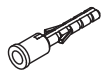		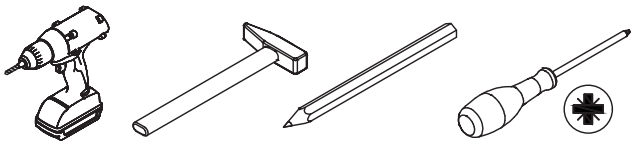
∅8 x 38 mm	∅4 x 68 mm	

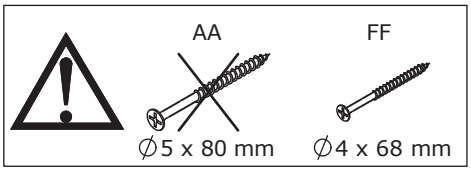

****Option A:**** Drill holes to wall, and insert the expansion screw (R).
Secure the unit to the wall using screw (FF).
Note: Align part (14) with the edge and bottom of panel 8.

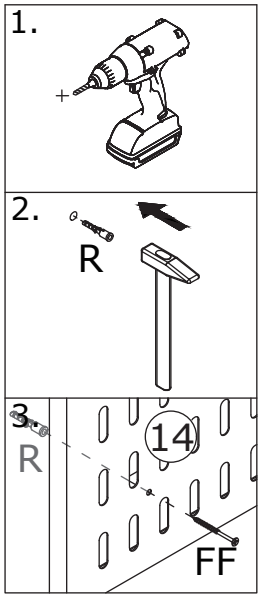

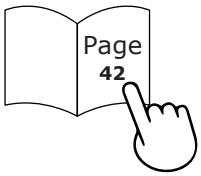

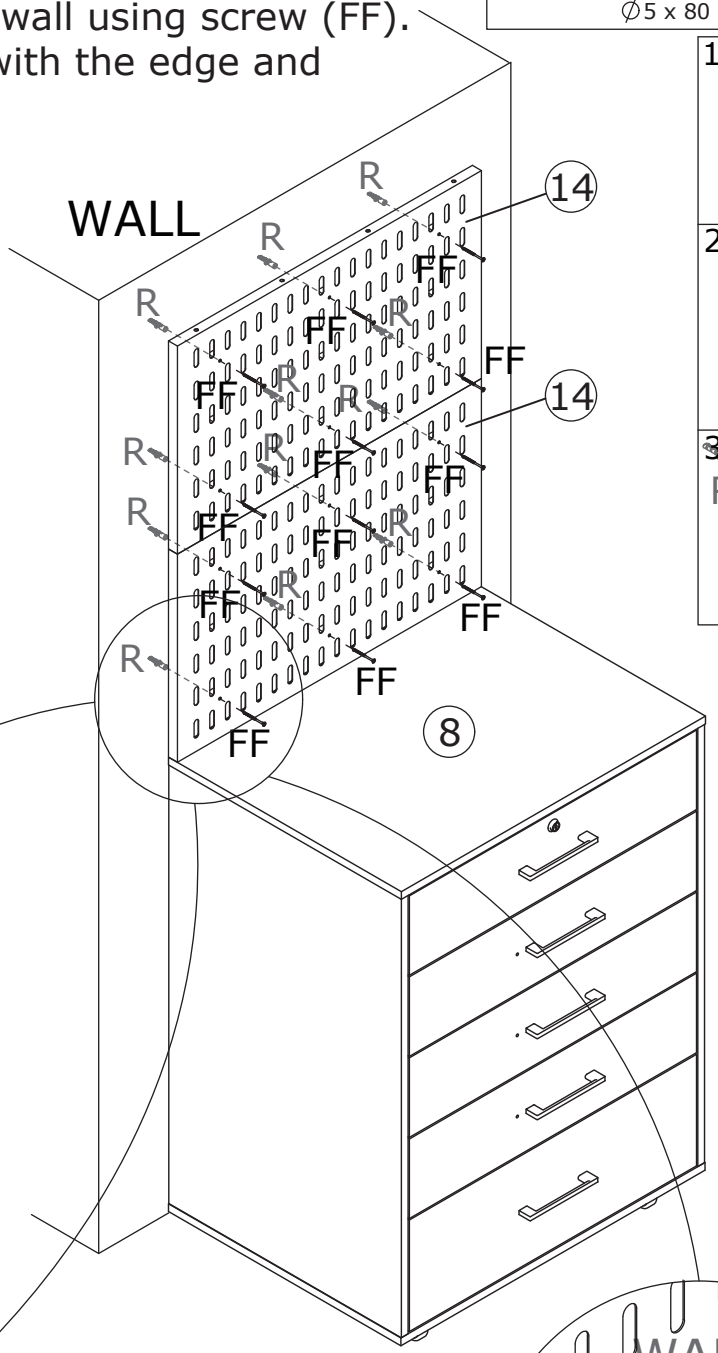

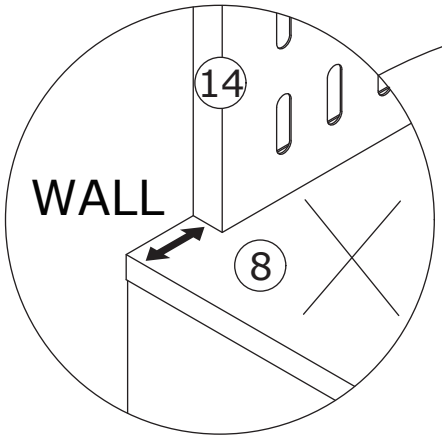

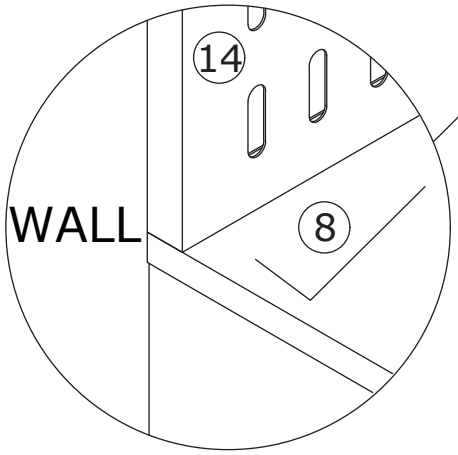

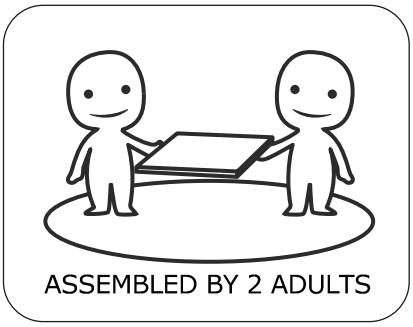

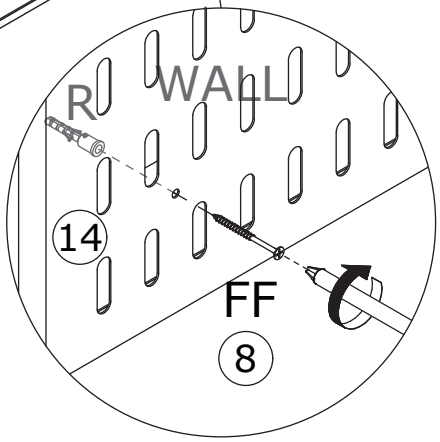

36

FF x 12



∅4 x 68 mm

GG x 12

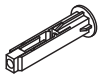

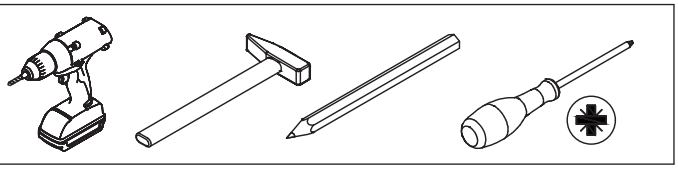



AA



∅5 x 80 mm

FF



∅4 x 68 mm

****Option B:**** Drill holes to wall, and insert the expansion screw (GG).
Secure the unit to the wall using screw (FF).
Note: Align component (14) with the edge and bottom of panel 8.

1.

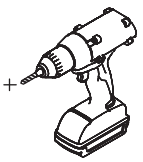

2.

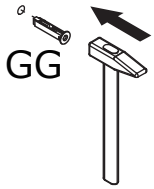

3

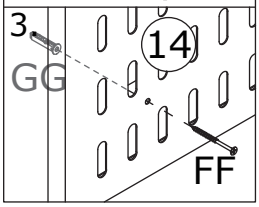

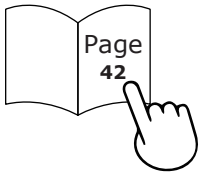

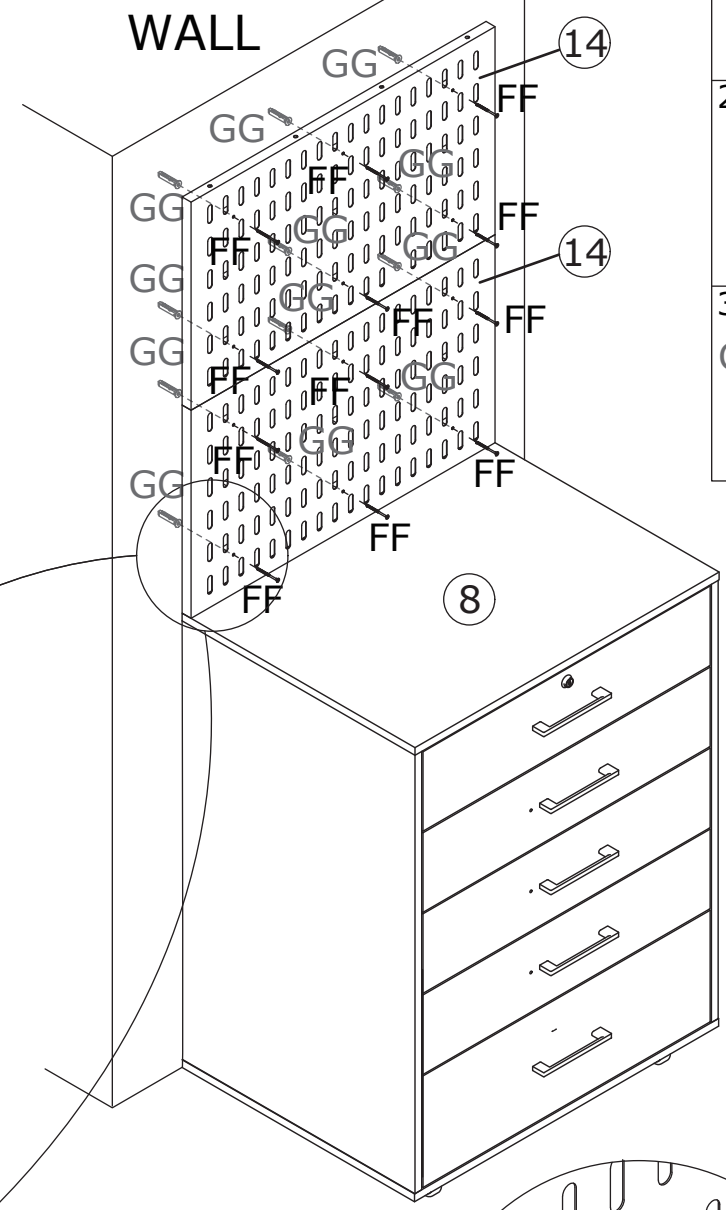

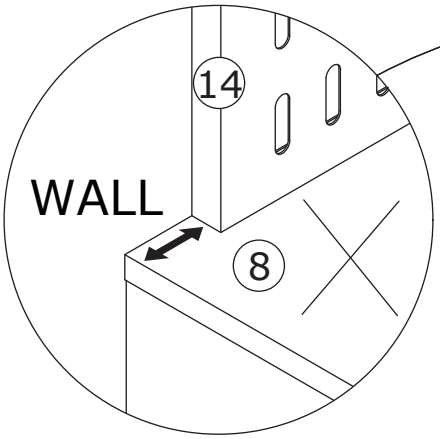

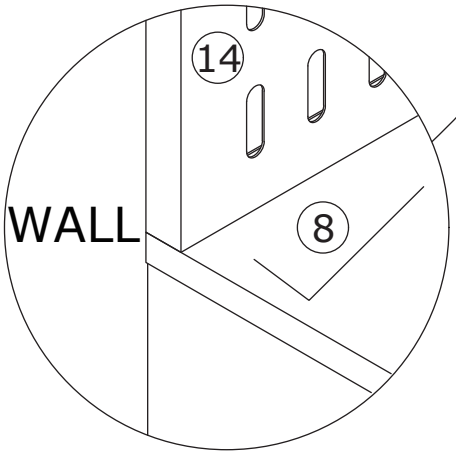

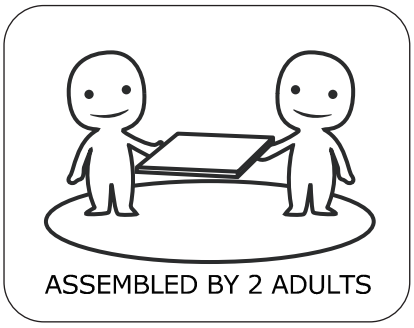

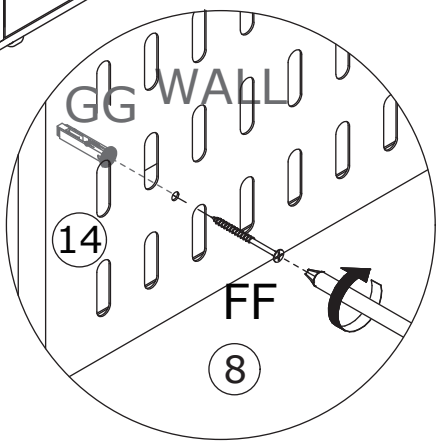

37

Ensure the position of part (X-3) according to the mounting distance.

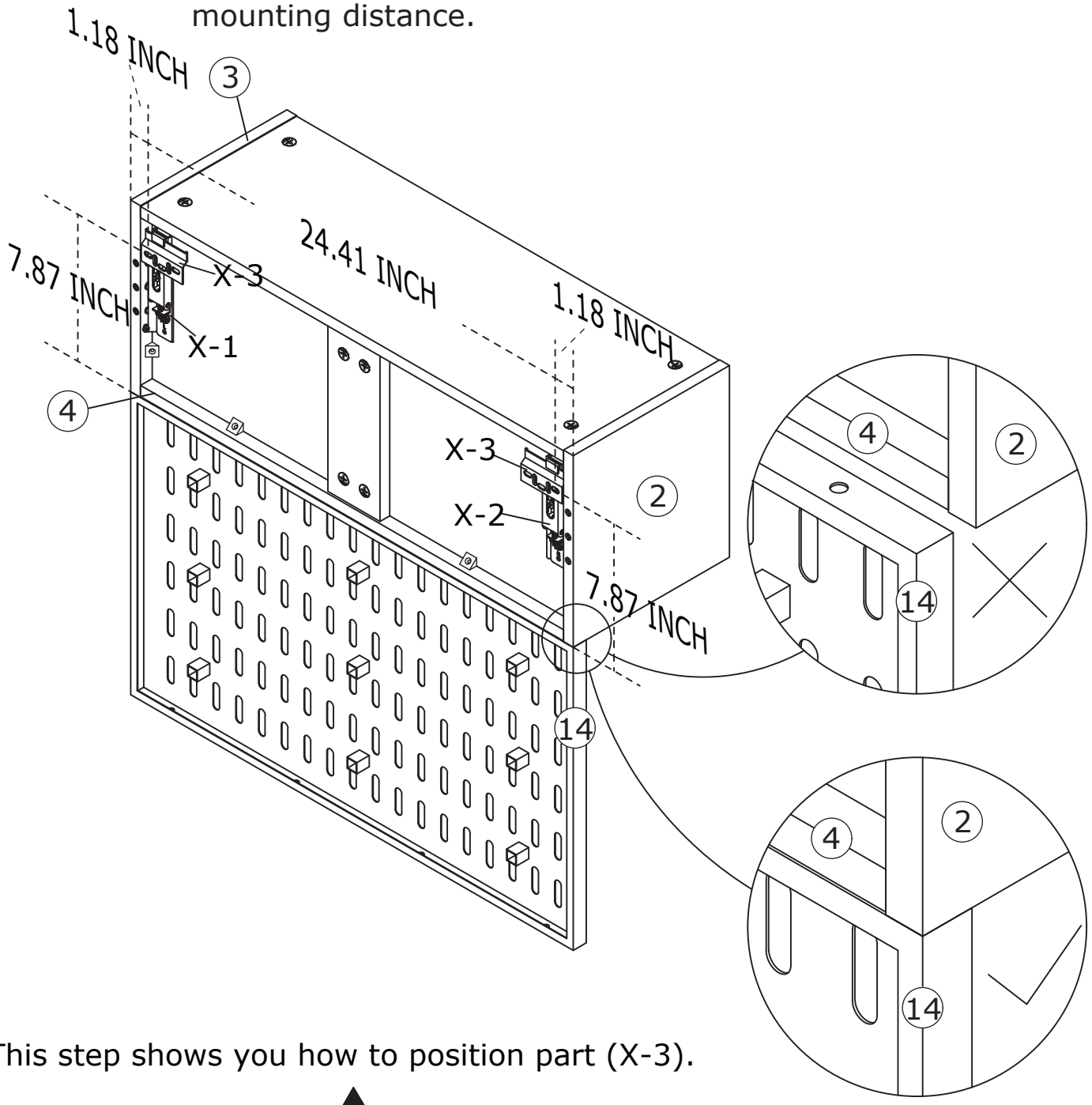

This step shows you how to position part (X-3).

Before positioning, align the top cabinet with the edge and top of part (14).

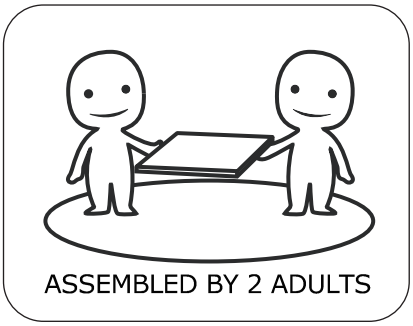

38

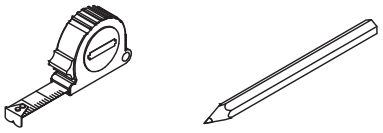

Ensure the position of part (X-3)
according to the mounting distance.

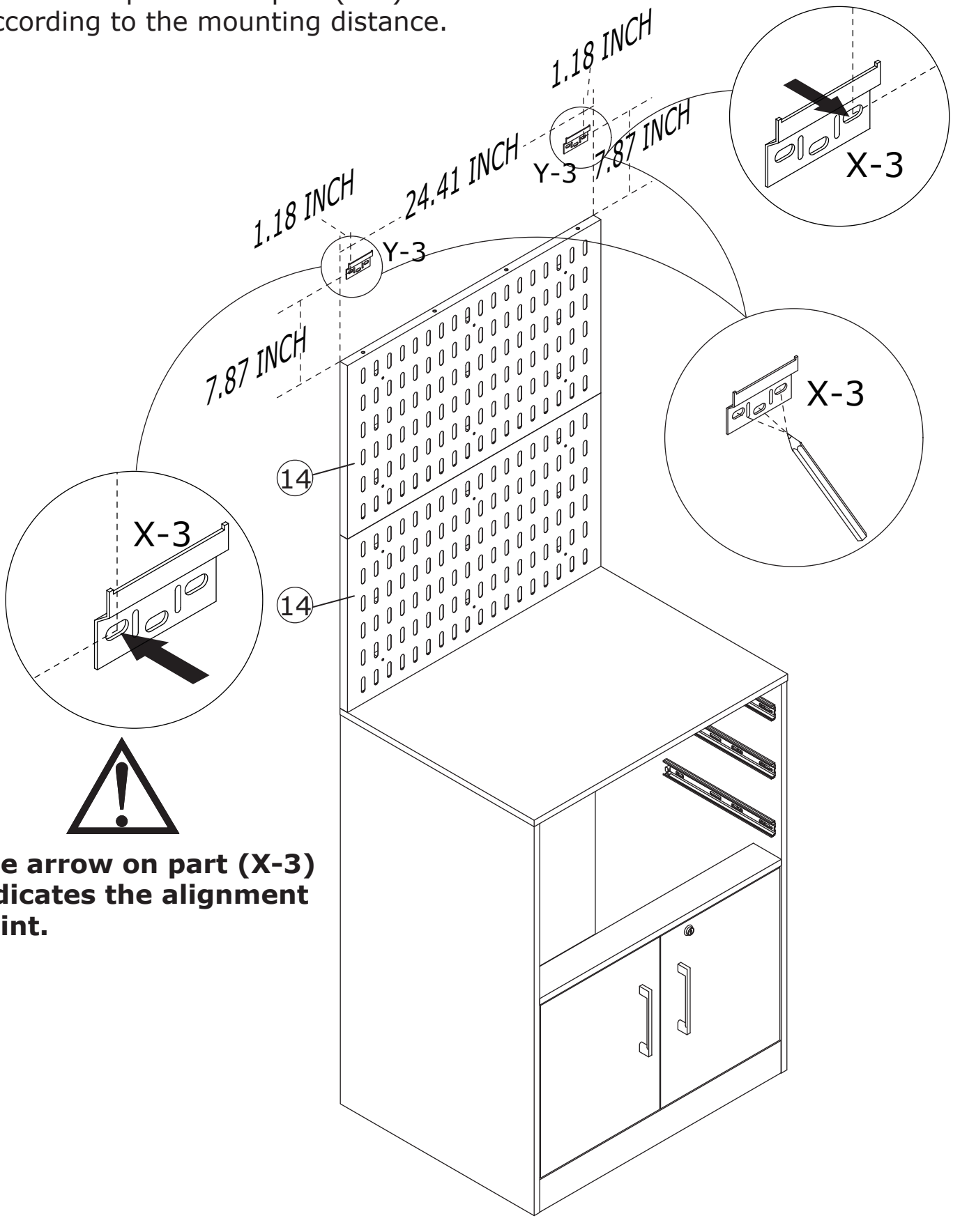

The arrow on part (X-3) indicates the alignment point.

39

AA x 6	X x 1	Z x 6	
 ∅5 x 80 mm	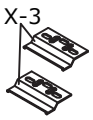 X-3	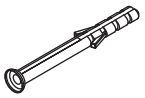 ∅8 x 80 mm	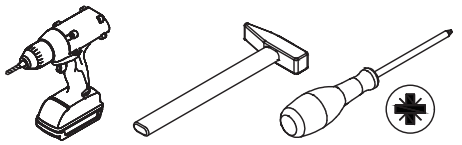

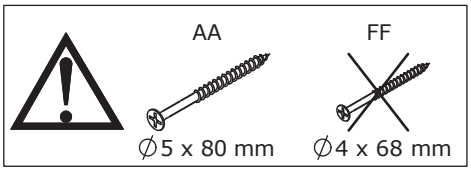

****Option A:**** Drill holes to wall, and insert the expansion screw (Z).
Install part (X-3) onto the wall using screw (AA).

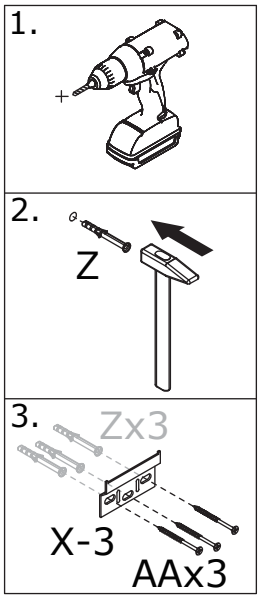

40

FF x 6	GG x 6	X x 1	
 ∅4 x 68 mm	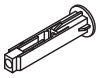	 X-3	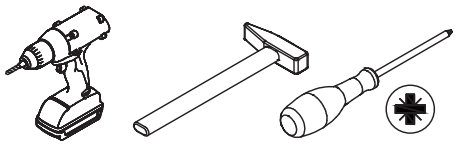

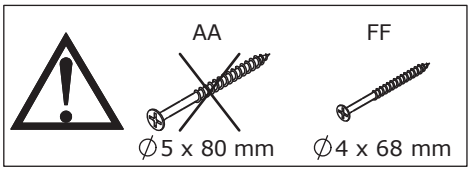

****Option B:****Drill holes to wall, and insert the expansion screw (GG). Install part (X-3) onto the wall using screw (FF).

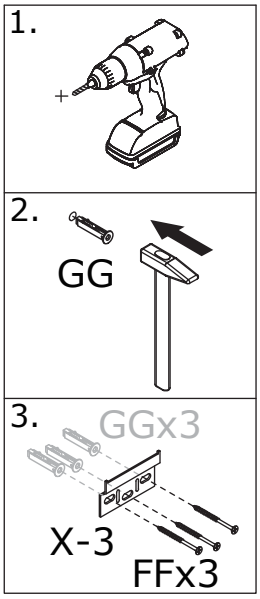

41

Install the upper cabinet body onto part (X-3).

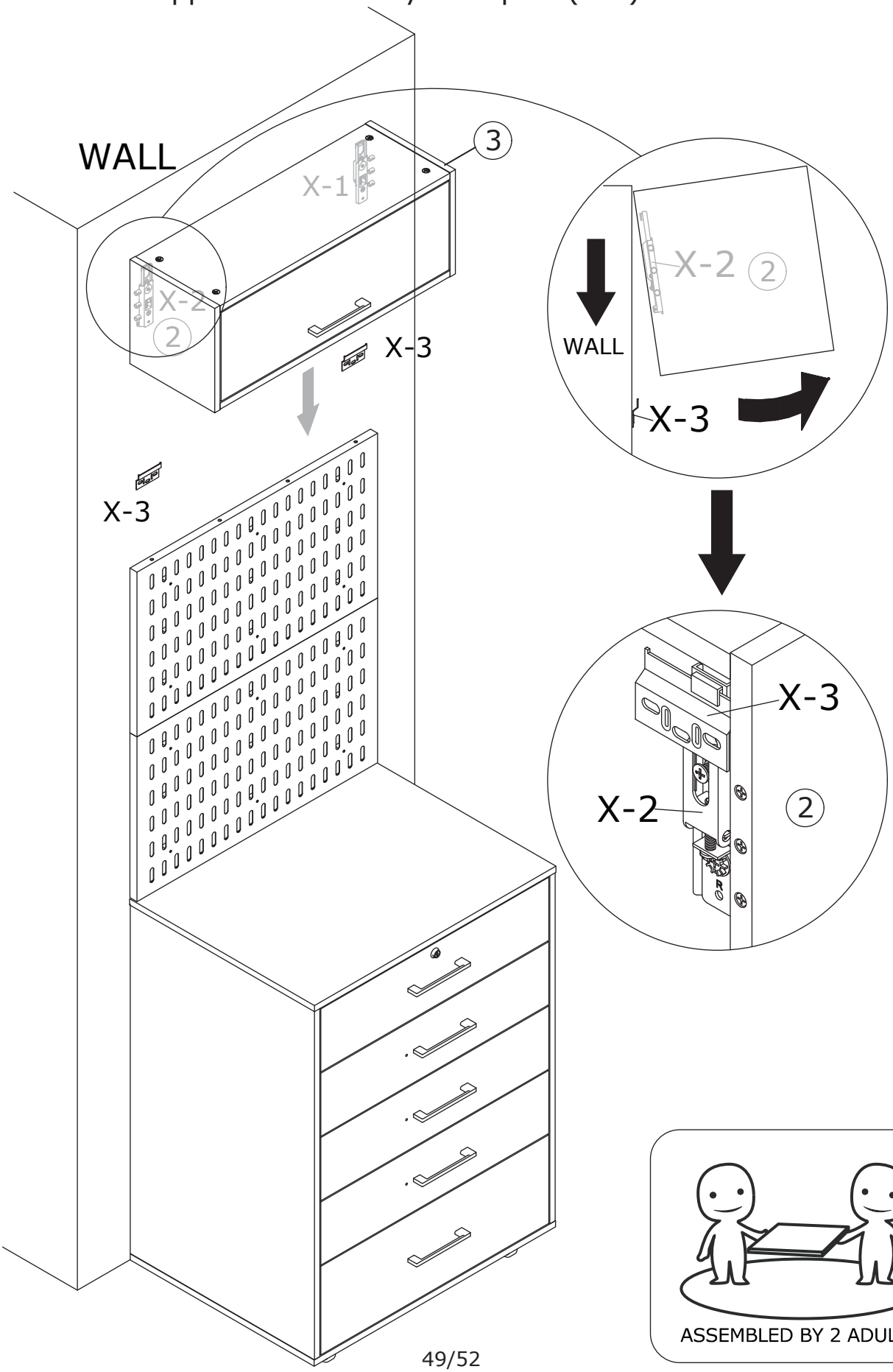

42

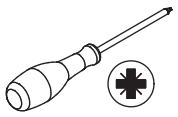

Once the wall cabinet is installed, if it is not aligned with the wall, you can adjust it using the front-to-back adjustment method described on page 39 for parts (X-1) and (X-2).

Issue

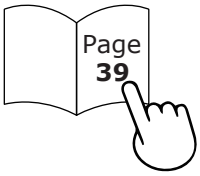

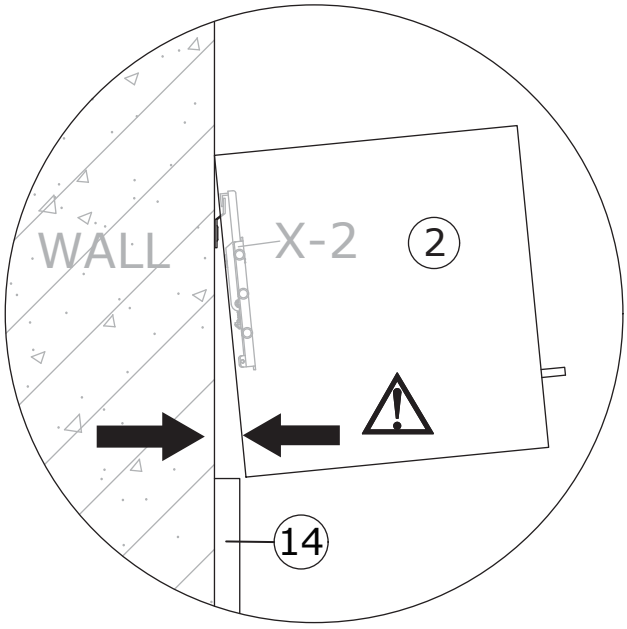

Resolve

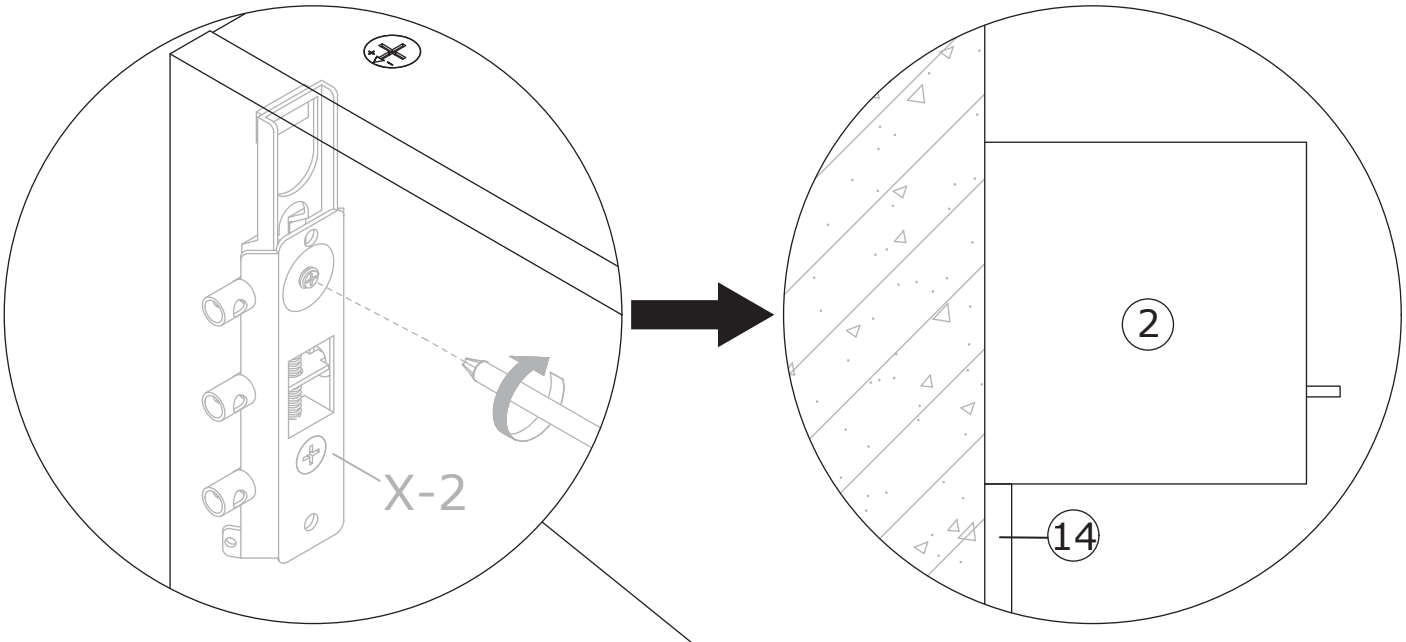

This step requires you to open the door panel.

43

X x 1



Open panel (7) and install part (X-4) onto panel 5.

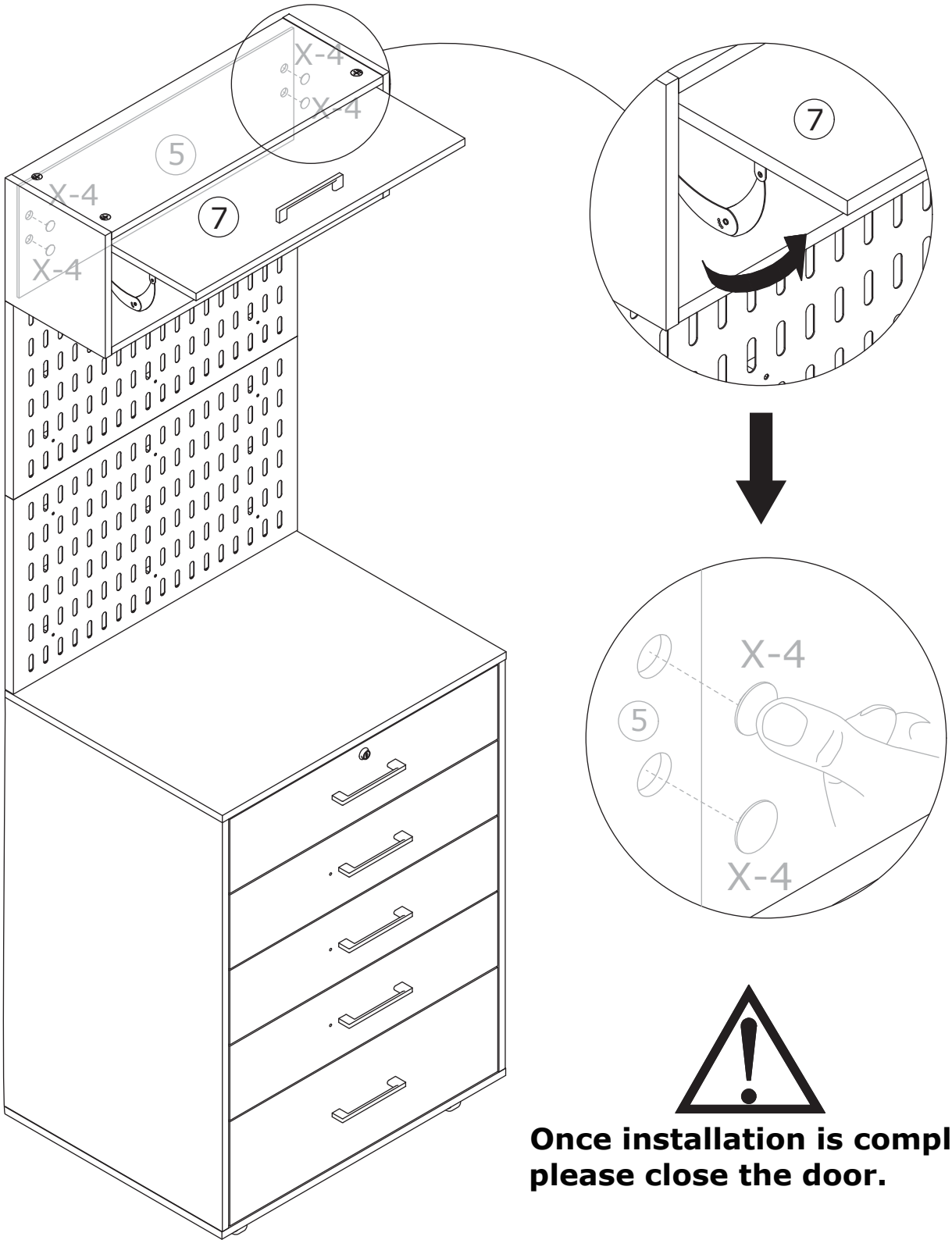

Once installation is complete, please close the door.

44

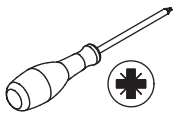

If the door panels are not aligned, please adjust the screws on the hinges according to the illustration.

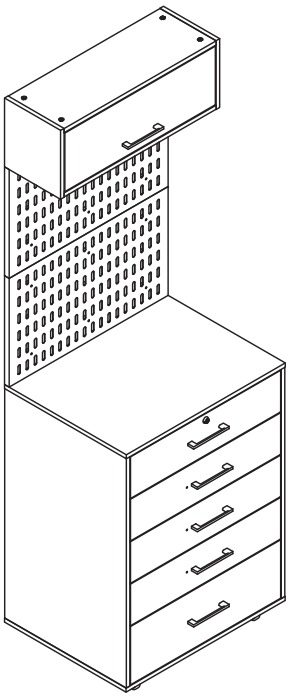

Or you can search this link to view the teaching video.
https://youtu.be/n0Lb36SoODM

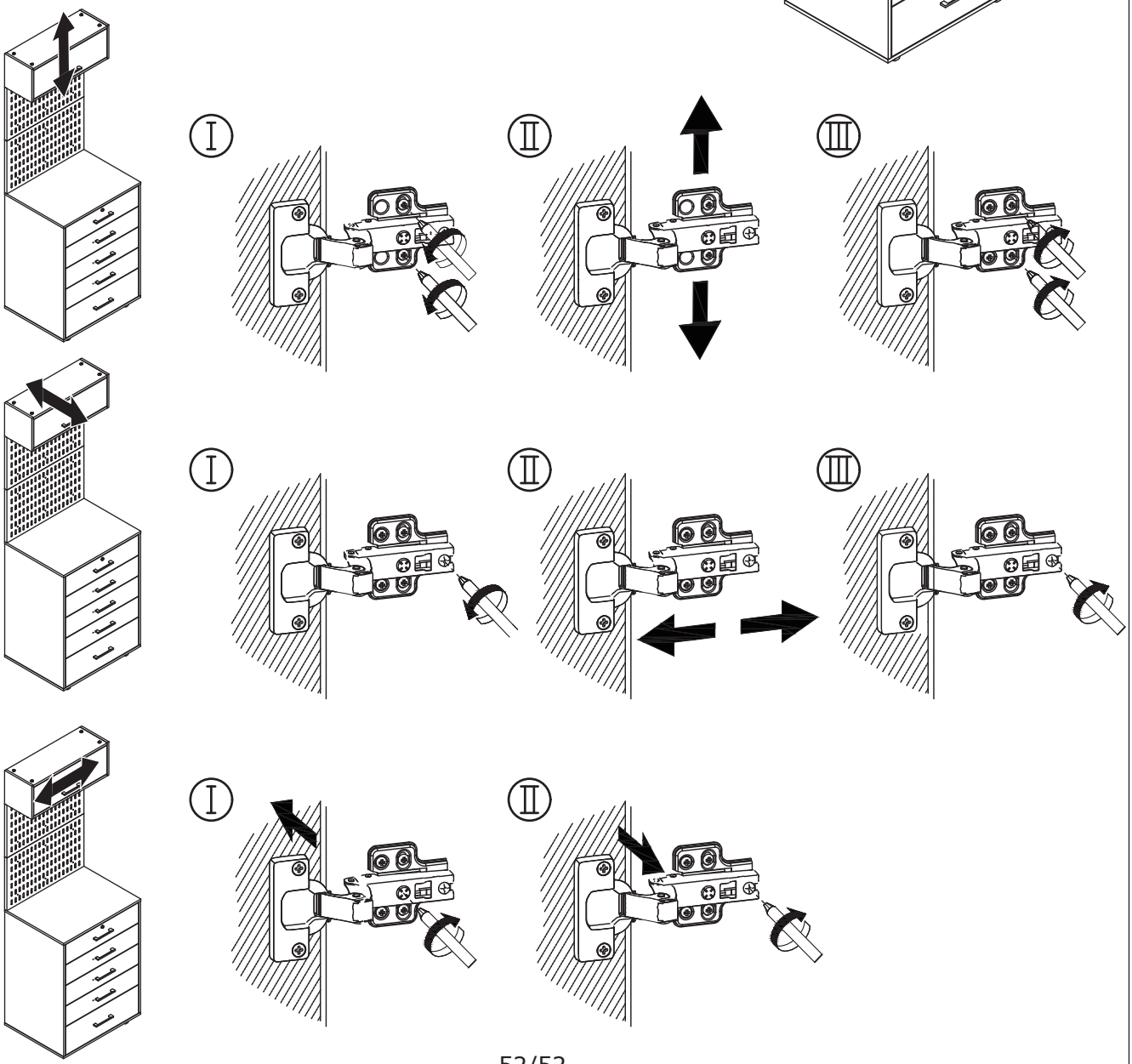

WARRANTY

WARRANTY CLAIMS

- There is a 30-day warranty for broken furniture or any other problems that do not work properly. The warranty will start from the date of purchase which must be verified by proof of purchase.

- Before making a claim, we may be able to answer your query, simply call us. Please leave your purchase order number, along with some details of the problem, if you want a replacement part. We will arrange within 48 hours. If there is out of stock, we will reply with a shipping date.

- The product must be used in accordance with the instructions provided. For health reasons.

- For other reasons, if the furniture needs to be returned, it must be cleaned and dried and operated within 30 days of receipt.

Type of Warranty Claim

- Failure to follow the furniture instructions will invalidate the warranty. Attention please.

- Does not include damage during installation, but includes damage during transportation.

Scope of responsibility

- Shall not bear any responsibility for misuse or user damage and / or loss of parts during the installation of furniture.

- After using, the damage and scratches of the furniture are not covered by the warranty.

The Warranty Relates to All Bought in The Us and Covers The Following Areas

- Sheet parts: 1 month from the date of purchase.

- Electrical parts: 1 month from the date of purchase.

RETURNS

CHANGED YOUR MIND AND NEED TO RETURN YOU ITEM?

PLEASE FOLLOW THE BELOW INSTRUCTIONS:

- If you have purchased and have simply changed your mind, follow the retailer's instructions for returns.

DEFECTIVE ITEMS

- If your item is defective in any way, i.e. it doesn't work but you can't identify why, in the first instance, please call us.

DAMAGED ITEMS

- If you receive an order with obvious shipping damage from the retailer, then we suggest the delivery is refused. If the delivery has been accepted and then shipping damage is found, please follow the specific instructions advised by the retailer.
  In all circumstances please save all packaging material and paperwork for the order. Please be aware that if you dispose of packaging material or attempt to return the merchandise without contacting the fulfiller, you jeopardise your chances of making a claim, and you may not receive a credit for the return.

AFTER-SALES CONTACT


adelahu@fufugaga.com


208-820-0068