

INSTRUCTION MANUAL

ADIRONDACK CHAIR

AC001

Scan the QR code to watch the installation video.

HELP CENTER

MISSING A PART?
GIVE US A CALL BEFORE
HEADING BACK TO THE STORE

The store where you made your purchase
does not stock parts for this item.
If you have assembly questions,
or if you are missing or have damaged parts,
please call

1-833-423-1158
(Mon-Fri,8:00 am to 5:00 pm EST)
needcare@peteroutdoor.com

Please contact us via email. Due to high call volume,
there may be a wait time for phone support.

Please have the following information ready when you contact us, so we can assist you promptly.

- *Purchasing platform*
- *Order number or Po number (you can find the info on your invoice, E-receipt or platform account).*
- *The model number of the product (printed on the package box).*
- *Description of the part from the parts list.*

BEFORE INSTALLATION

- Check all parts before assembly to ensure completeness and no damage, and review all components and steps in advance for a clear assembly process.
- This product uses a snap-fit and interlocking structure, no screws required; a rubber mallet is not included and should be prepared by the user for gentle assembly assistance.
- Ensure the assembly area is flat, clean, and spacious, and free of obstacles to prevent interference or damage during installation.
- Handle components carefully as some parts may be heavy or rigid.
- Please retain these instructions for future reference.

CUSTOMER SERVICE FAQS

Q: Some parts are missing, I could not finish assembly.

A: Please kindly circle missing parts in the parts list of the manual, and send pictures to our service team. We will prepare and ship them to you for free ASAP.

Q: My item occurs a quality problem. I am not satisfied with it.

A: Please kindly take it easy and provide us pictures. We would help you to solve it by send replacement parts, replacement products or refund. And you do not need to take time to repack and return it back to us.

Q: The color is not the same as I ordered. How to solve it?

A: Please kindly help to provide us the pictures of the SKU number, the shipping label on the carton and also the product itself, better in one picture. Your pictures will help us to speed up solving the problem.

Q： How to prolong the service life of this item?

A: When it is stained with dusts, oil or sweat, please wipe with a damp cloth. You'd better use a cover when it is out of use.

If you have any problem with this product or our service, please don't be hasty in writing a negative review or feedback. Welcome to contact us right away, our service team will response within 24 hours, we will try our best to help you. Thank you for giving us a chance to improve the product and our service.

★ You're welcome to contact us at needcare@peteroutdoor.com

BEFORE ASSEMBLY NOTICE



1 person

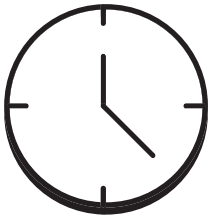

20min assembly

PART LIST（NOT SHOW ACTUAL SIZE）

A X1

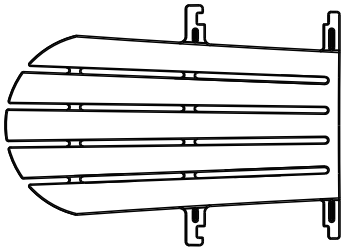

BACKREST

B X1

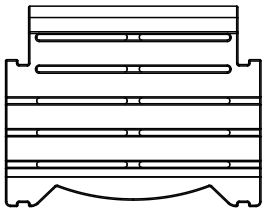

CHAIR SEAT

C X1



RIGHT ARM

D X1



LEFT ARM

E X2



RAIL

F X1



SUPPORTING RAIL

G X1

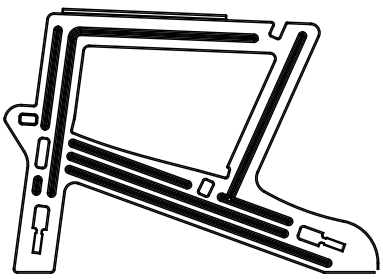

LEFT LEG

H X1

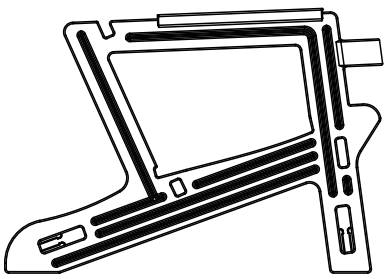

RIGHT LEG

ASSEMBLY STEPS（NOT SHOW ACTUAL SIZE）

STEP 1

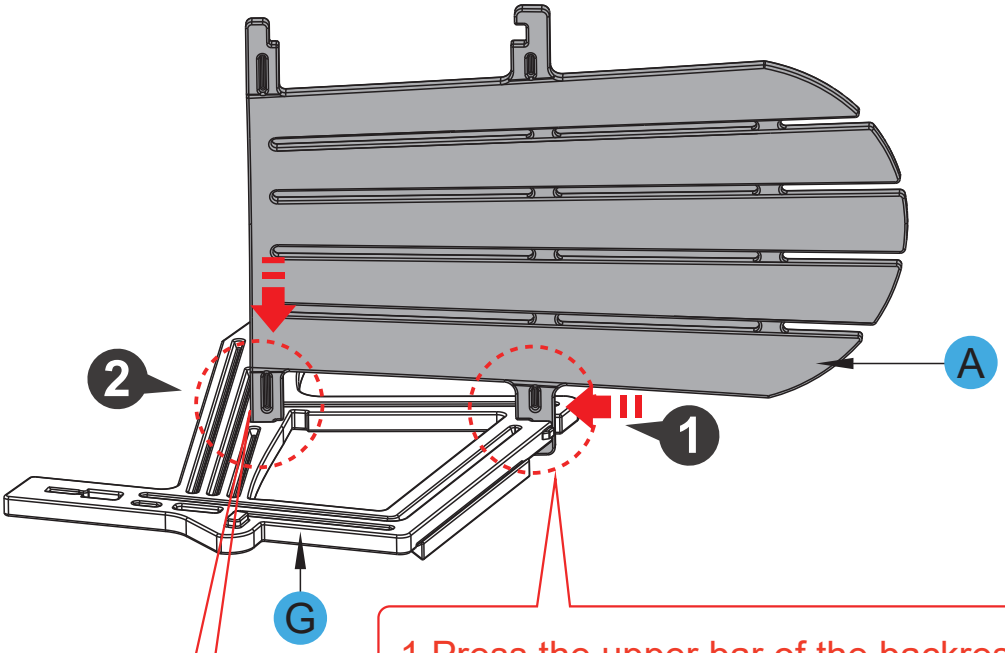

1.Press the upper bar of the backrest into the slot on the leg (Figure 1).

2.Insert the lower bar of the backrest into the slot on the leg (Figure 2).

Scan QR code for key installation steps video.

A X1

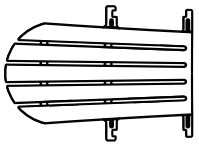

BACKREST

G X1

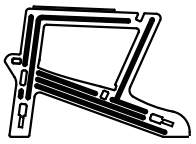

LEFT LEG

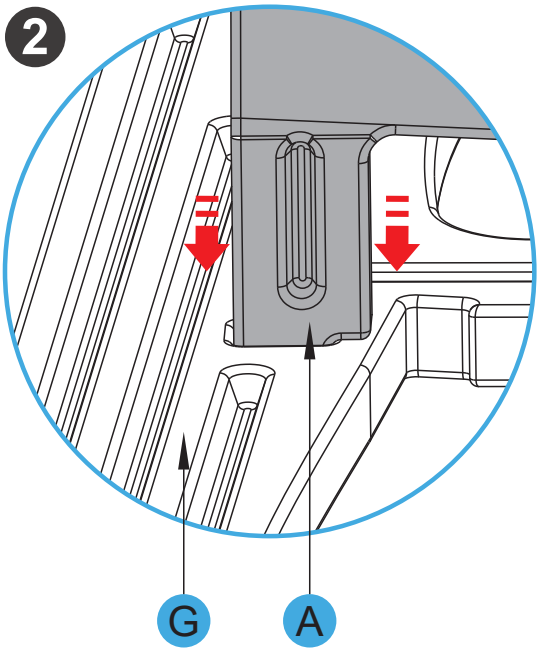

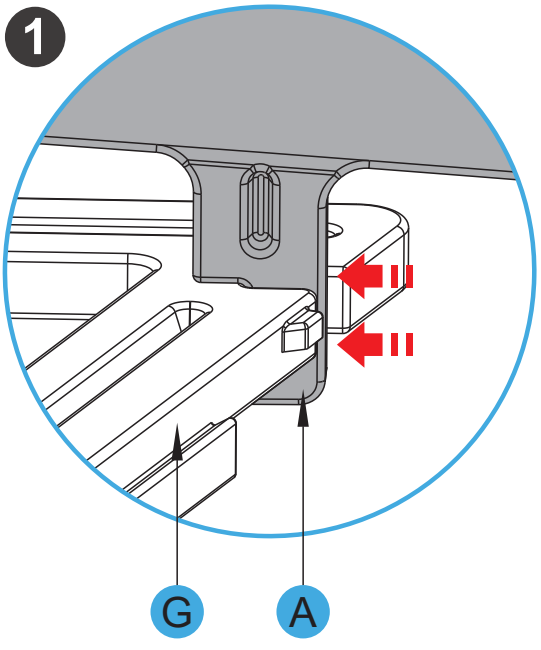

ASSEMBLY STEPS（NOT SHOW ACTUAL SIZE）

STEP 2

H X1



RIGHT LEG

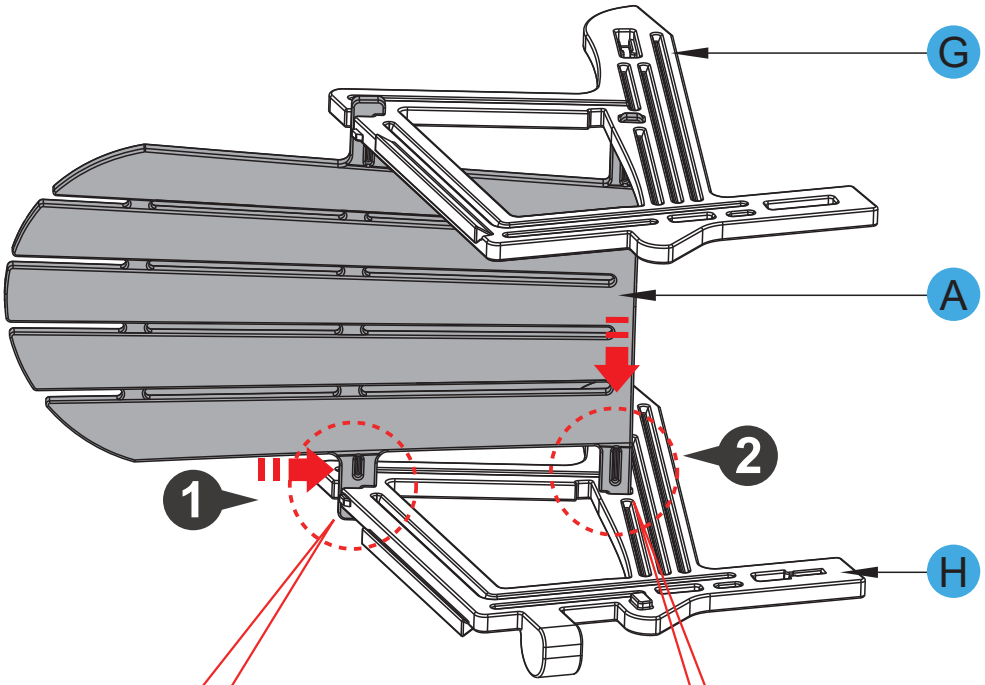

1.Press the upper bar of the backrest into the slot on the leg (Figure 1).

2.Insert the lower bar of the backrest into the slot on the leg (Figure 2).

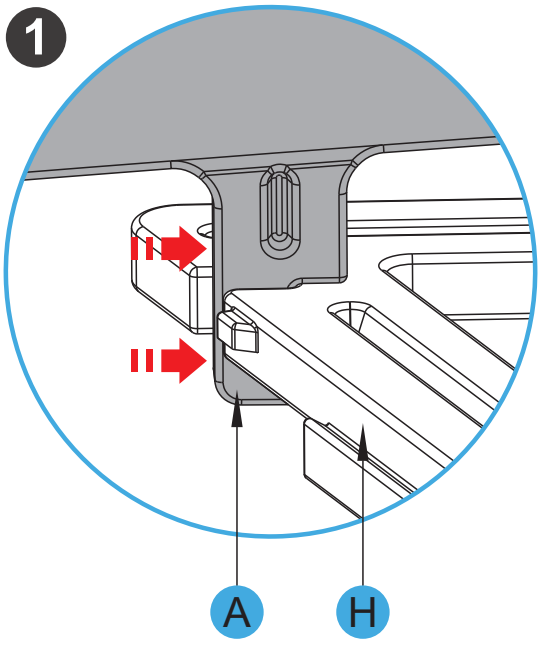

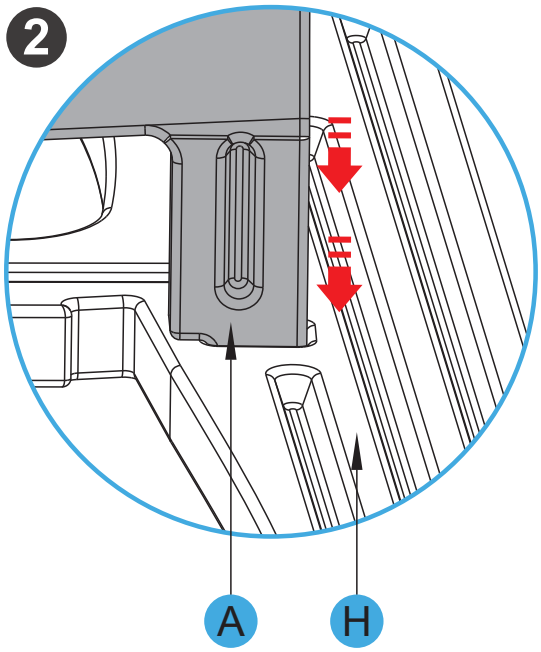

ASSEMBLY STEPS（NOT SHOW ACTUAL SIZE）

STEP 3

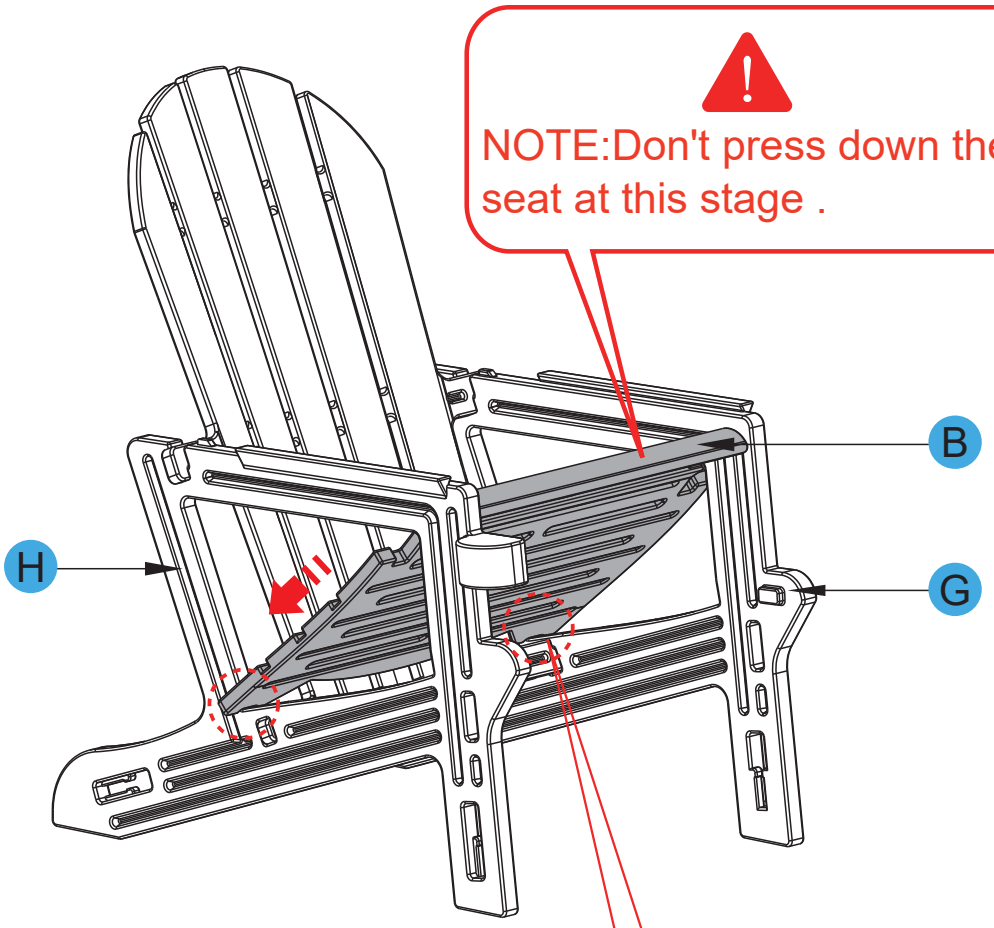

Scan QR code for key installation steps video.

B X1

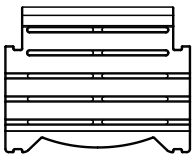

CHAIR SEAT

Insert Part B Chair Seat to the assembled frame till the groovesits in the slot in the legs (See Figure 1). Keep the seat acertain angle upwards as below.

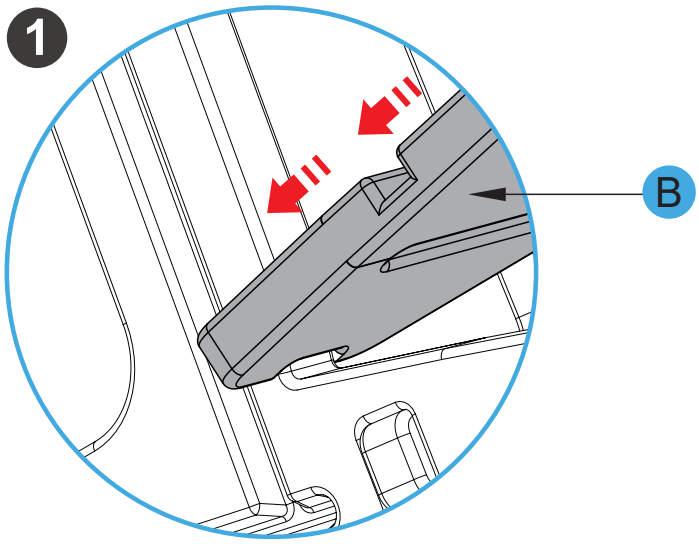

ASSEMBLY STEPS（NOT SHOW ACTUAL SIZE）

STEP 4

F X1



SUPPORTING RAIL

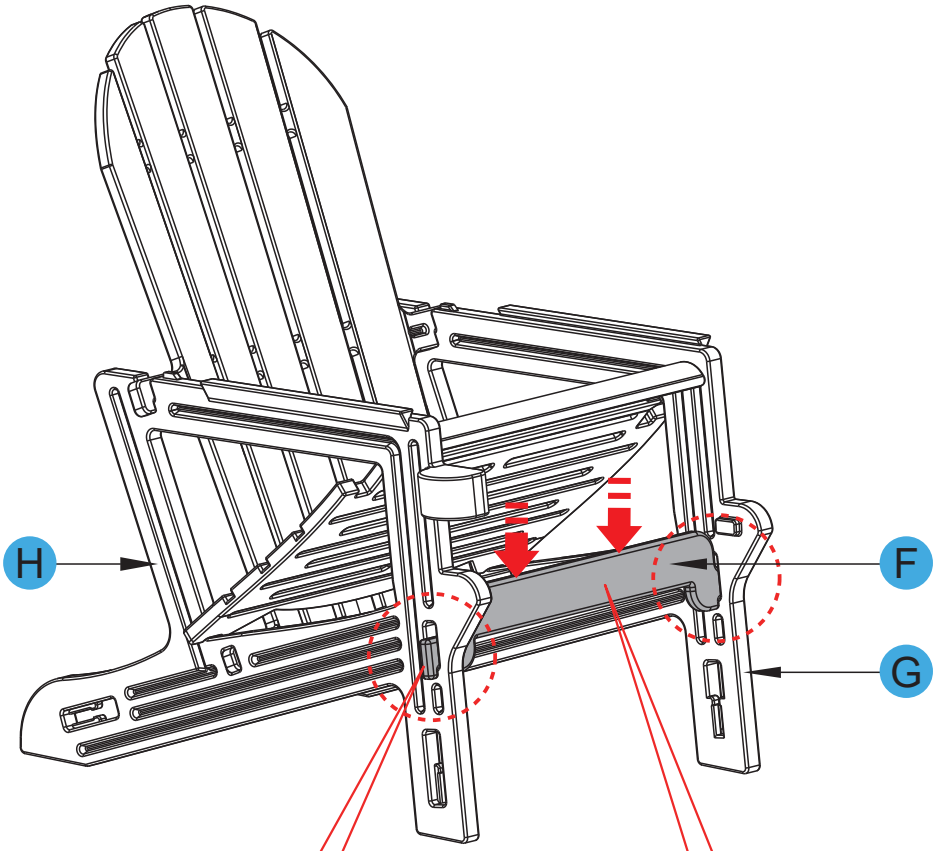

1.Place Part F Supporting Rail between 2 pcs of Legs as below,make sure the tenons with groove facing downward (See Figure 1).

2.Press hard on Part F Supporting Rail to make the tenons locked firmly into the mortise in the legs (Figure 2).

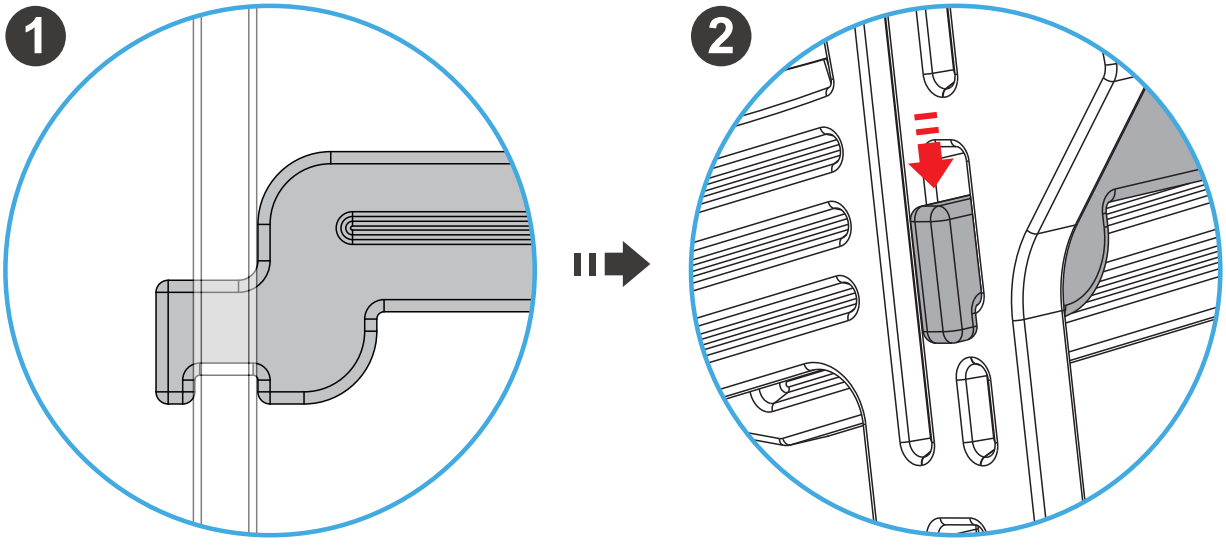

ASSEMBLY STEPS（NOT SHOW ACTUAL SIZE）

STEP 5

E X1



RAIL

1.Press the seat down till it landed on the supporting rail firmly.

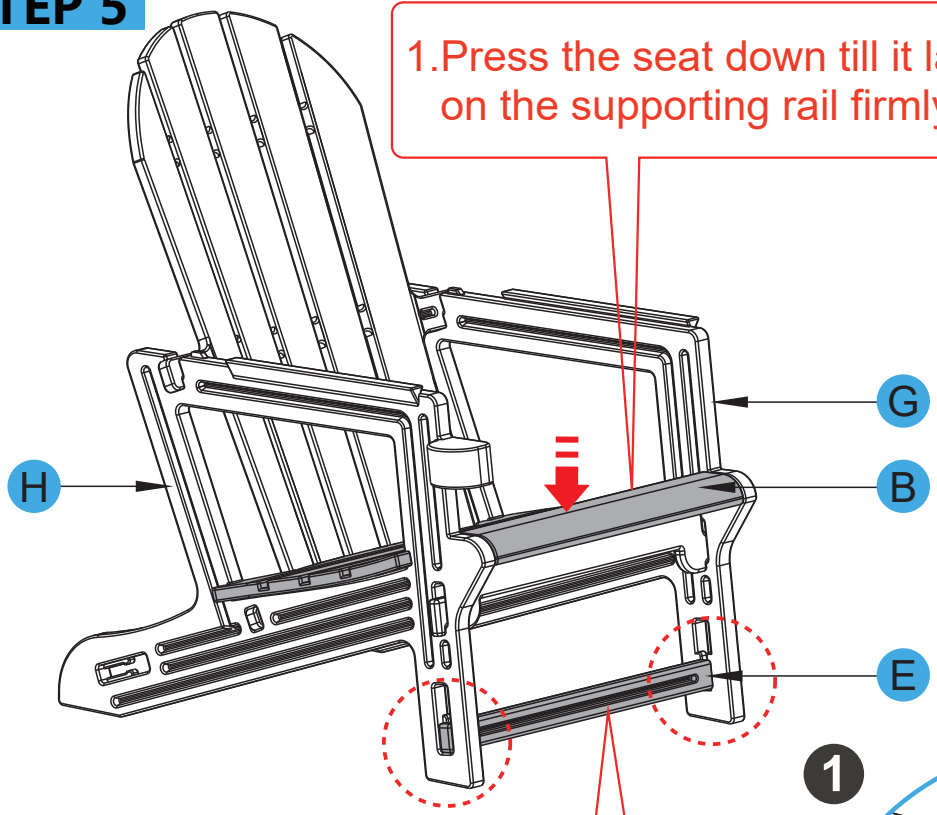

2.Place Part E Rail between Part G Left Leg and Part H Right Leg as below, make sure the arrows are inside and pointing downward (See Figure 2).

3.Press hard on Part E Rail to make the tenons locked firmly into the mortise in the legs (Figure 3).

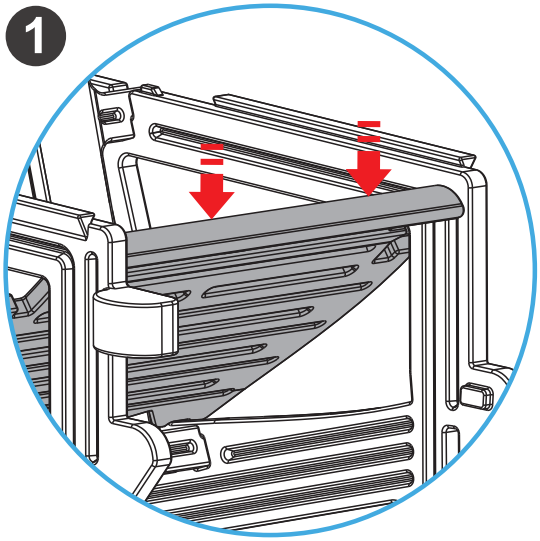

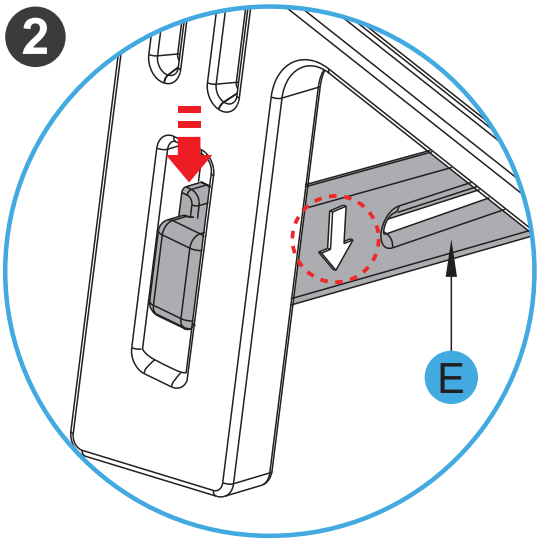

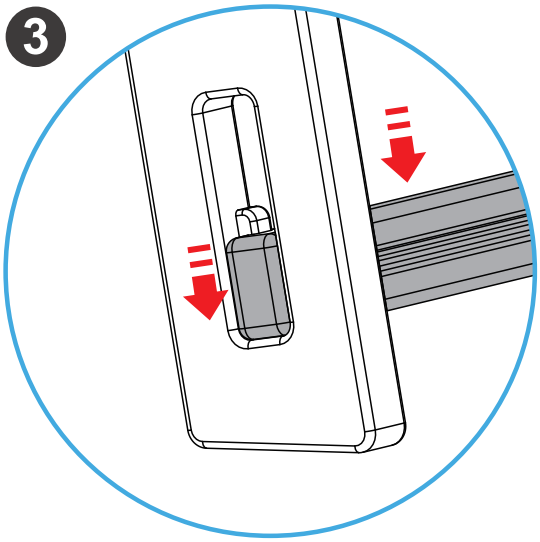

Arrow pointing downward (inside).

ASSEMBLY STEPS（NOT SHOW ACTUAL SIZE）

STEP 6

E X1



RAIL

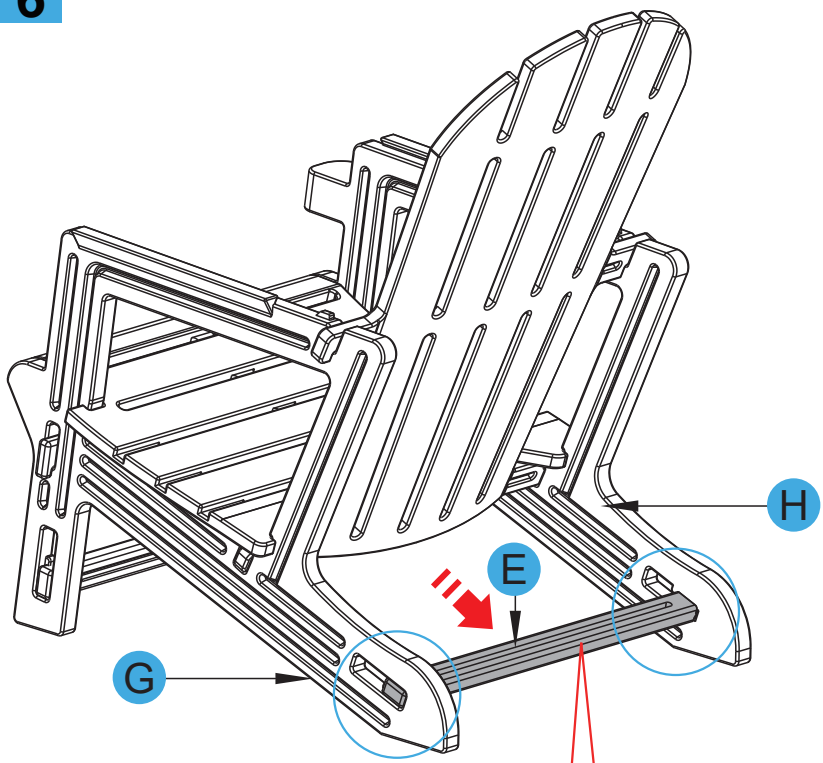

1.Place another Part E Rail between Part G Left Leg and Part H Right Leg as below, make sure arrows are inside and pointing downward (See Figure 1).

2.Press hard on Part E Rail to make the tenons locked firmly into the mortise in the legs (Figure 2).

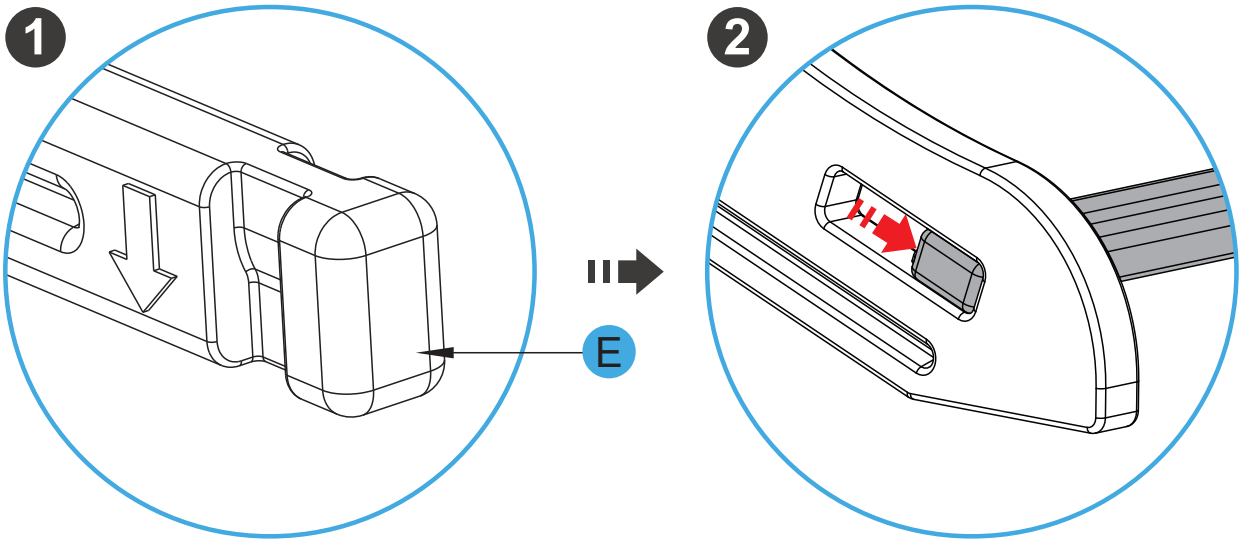

Arrow pointing downward (inside).

ASSEMBLY STEPS（NOT SHOW ACTUAL SIZE）

STEP 7

C X1



RIGHT ARM

1.Attach Part C Right Arm to Part H Right Leg as following steps.

2.Match the groove in Part C Right Arm with the tenon on top of leg and slide the arm horizontally backward (See Figure 1).

3.Pull the arm upward when it moves to the lock, slide again till the lock trapped in the groove (Figure 2).

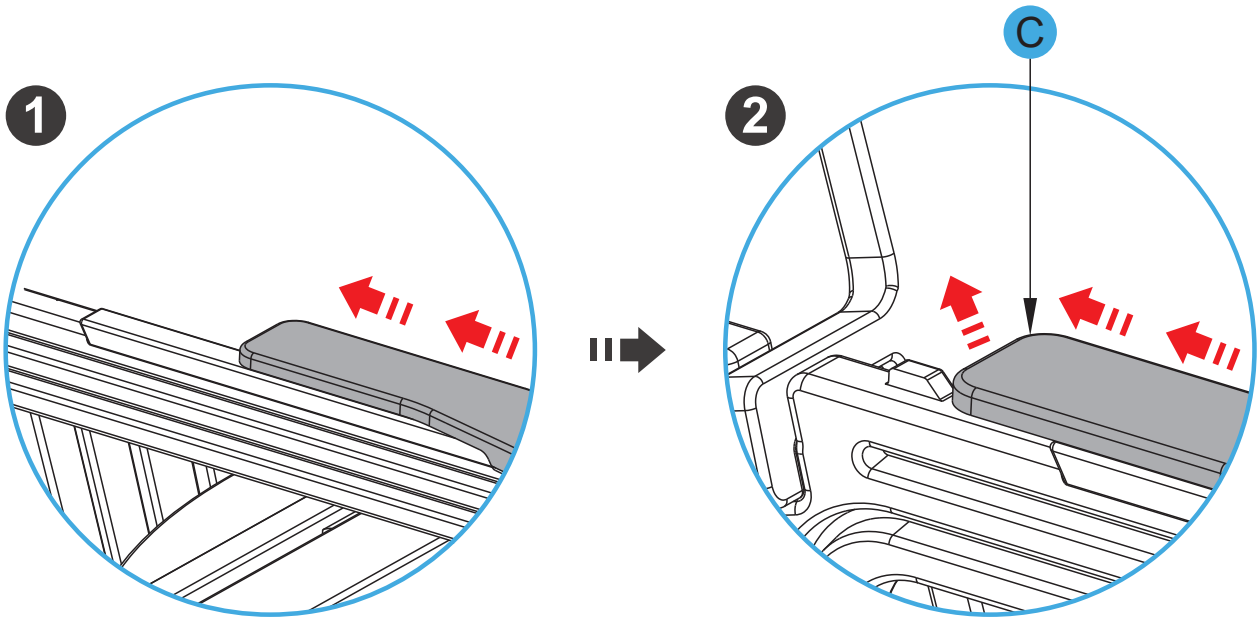

ASSEMBLY STEPS（NOT SHOW ACTUAL SIZE）

STEP 8

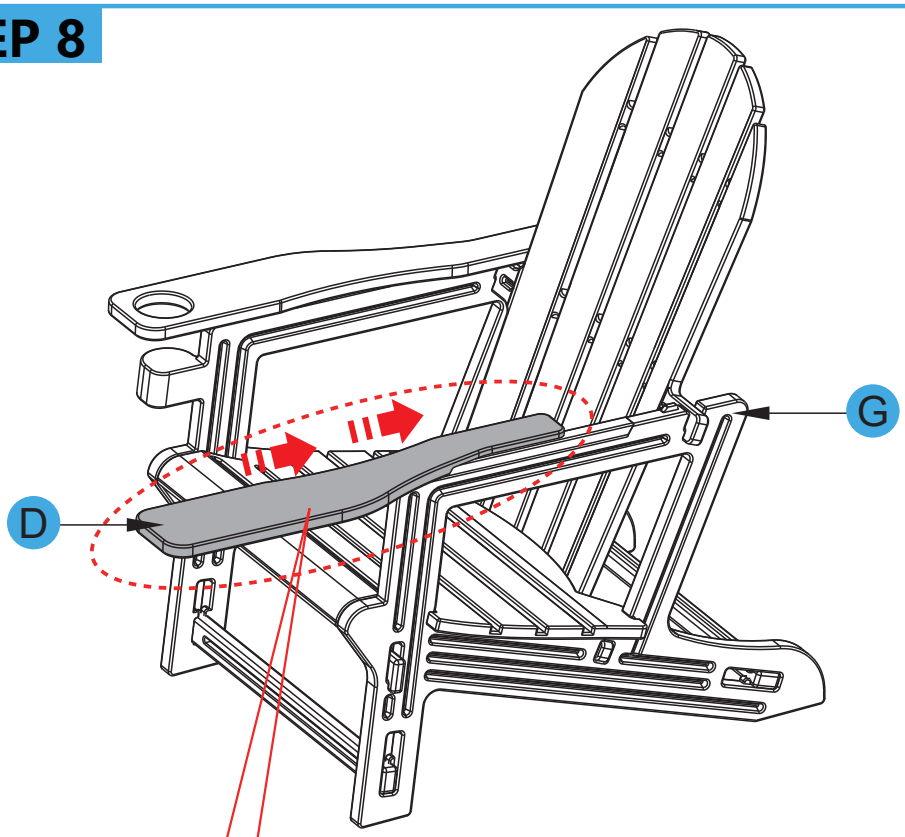

Scan QR code for key installation steps video.

D X1



LEFT ARM

1.Attach Part D Left Arm to Part G Left Leg as following steps.

2.Match the groove in Part D Left Arm with the tenon on top of leg and slide the arm horizontally backward (See Figure 1).

3.Pull the arm upward when it moves to the lock, slide again till the lock trapped in the groove (Figure 2).

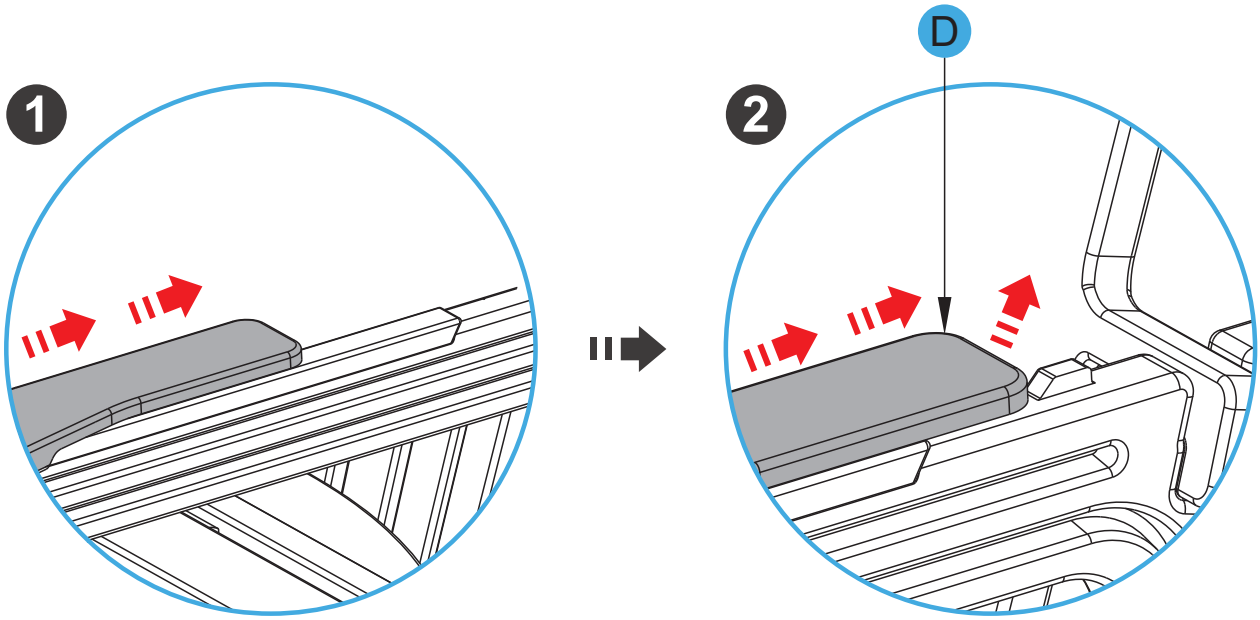

CARE & MAINTENANCE

- Check all parts before assembly and follow the steps in order. Align each component, insert into place, and press firmly until fully locked. Ensure all snap-fit joints are secure to complete assembly.
- Do not exceed weight capacity, avoid standing or jumping, and use only on a stable, level surface.
- Clean with a damp cloth or mild soap solution, avoid harsh chemicals or abrasive cleaners, do not place hot items directly on the surface, minimize sun exposure, use a cover when not in use, and keep away from ignition sources.
- Regularly check all snap-fit and interlocking joints. If any looseness occurs, re-seat and press connections firmly to ensure stability.
- Do not allow children to climb or jump on the product, and avoid misuse that may cause damage or safety risks.

PRODUCT WARRANTY INFORMATION

All items can be returned for any reason within 30 days since purchase date and will receive a full refund as long as the item is returned in its original product packaging and all accessories from its original shipment are included. All returned items will receive a full refund back to the original payment method. All returned items will be charged a re-stocking fee, $10 per piece.

All returns must be shipped back to our warehouse at the customer's expense. If the reason for return is a result of an error by us, then we will provide a prepaid shipping label via email. Boxes for return shipping will not be provided by us, and is the customer's responsibility to either use the original shipping boxes or purchase new Boxes.

Pictures may be required for some returns to ensure an item is not damaged prior to its return. Items returned are not considered undamaged until they are received by us and verified as such.

All damages to items are the customer's responsibility until the item has been received by and acknowledge by us as undamaged.

⚠ WARNING

The seller and manufacturer will not be liable for any personal injury, property damage or loss, which result from the incorrect assembly, improper use, inadequate maintenance, or neglect of the product. Whether it's direct, indirect, or incidental.