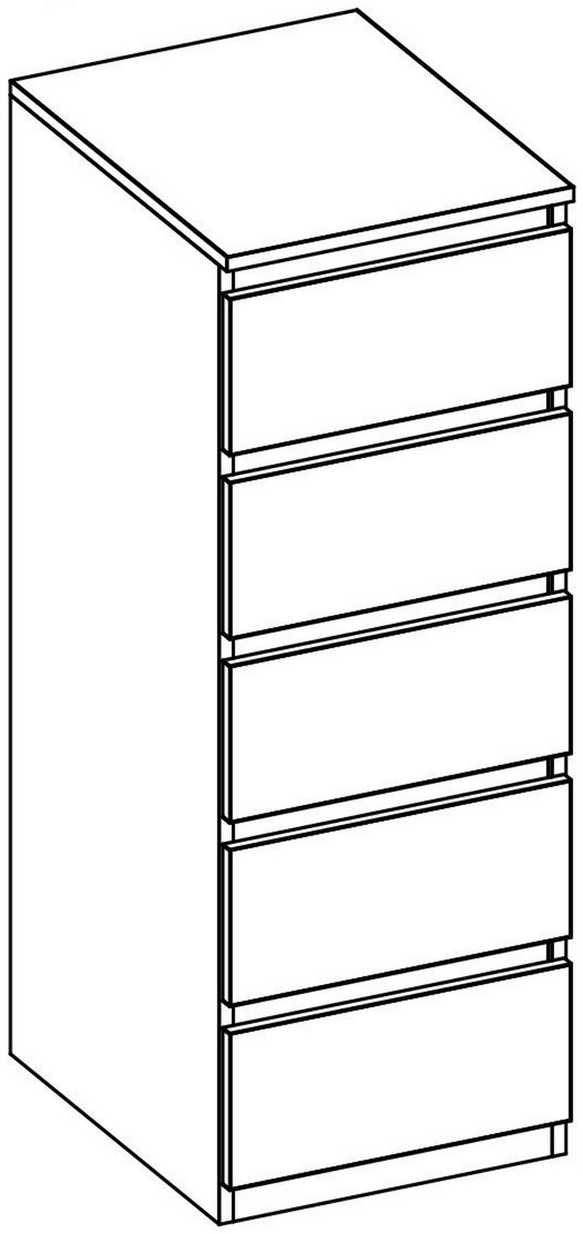

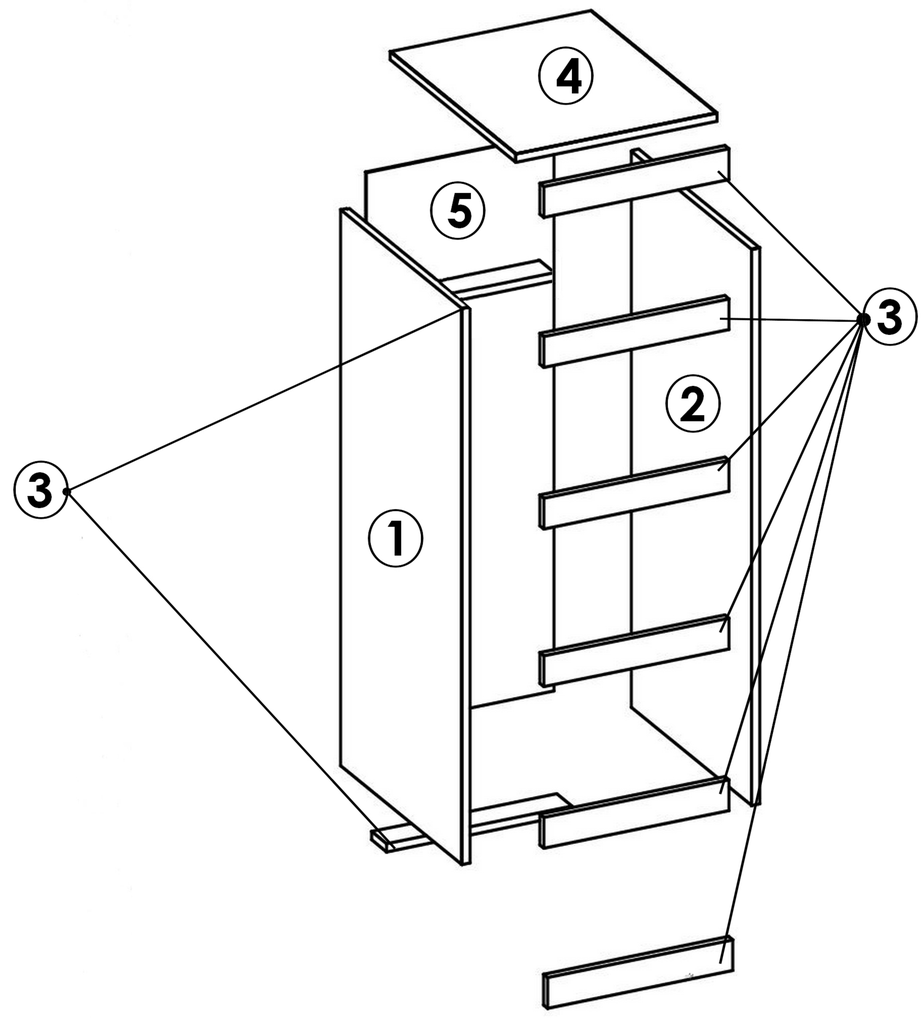

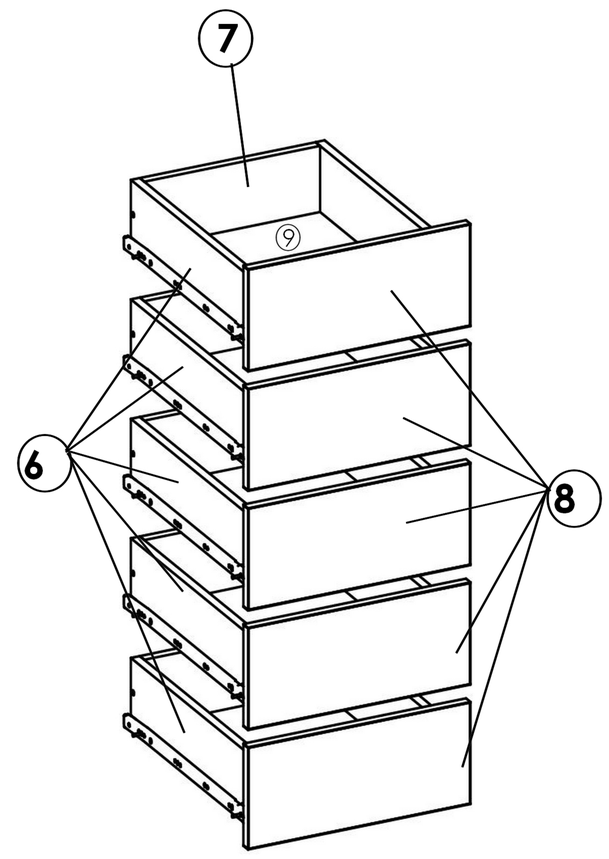

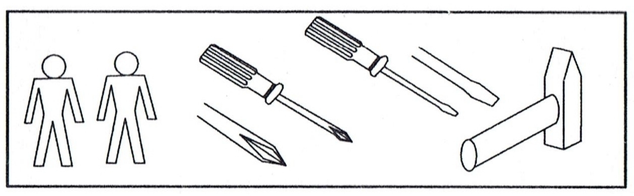

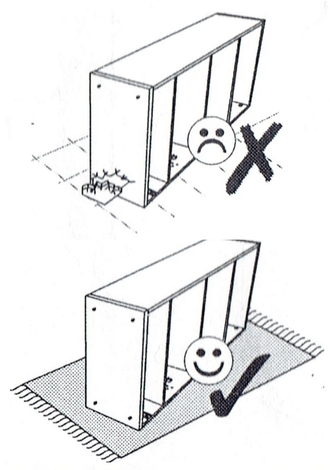

A x30	B x30	C Ø8x35 x40	D x5	E 5,8x9 x20	F x20
G 3,5x15 x30	H x4	J x60	x1	M2 x 10	

1

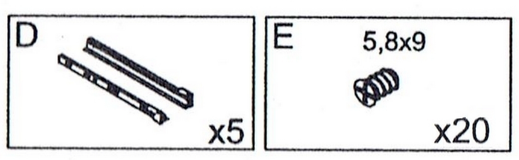

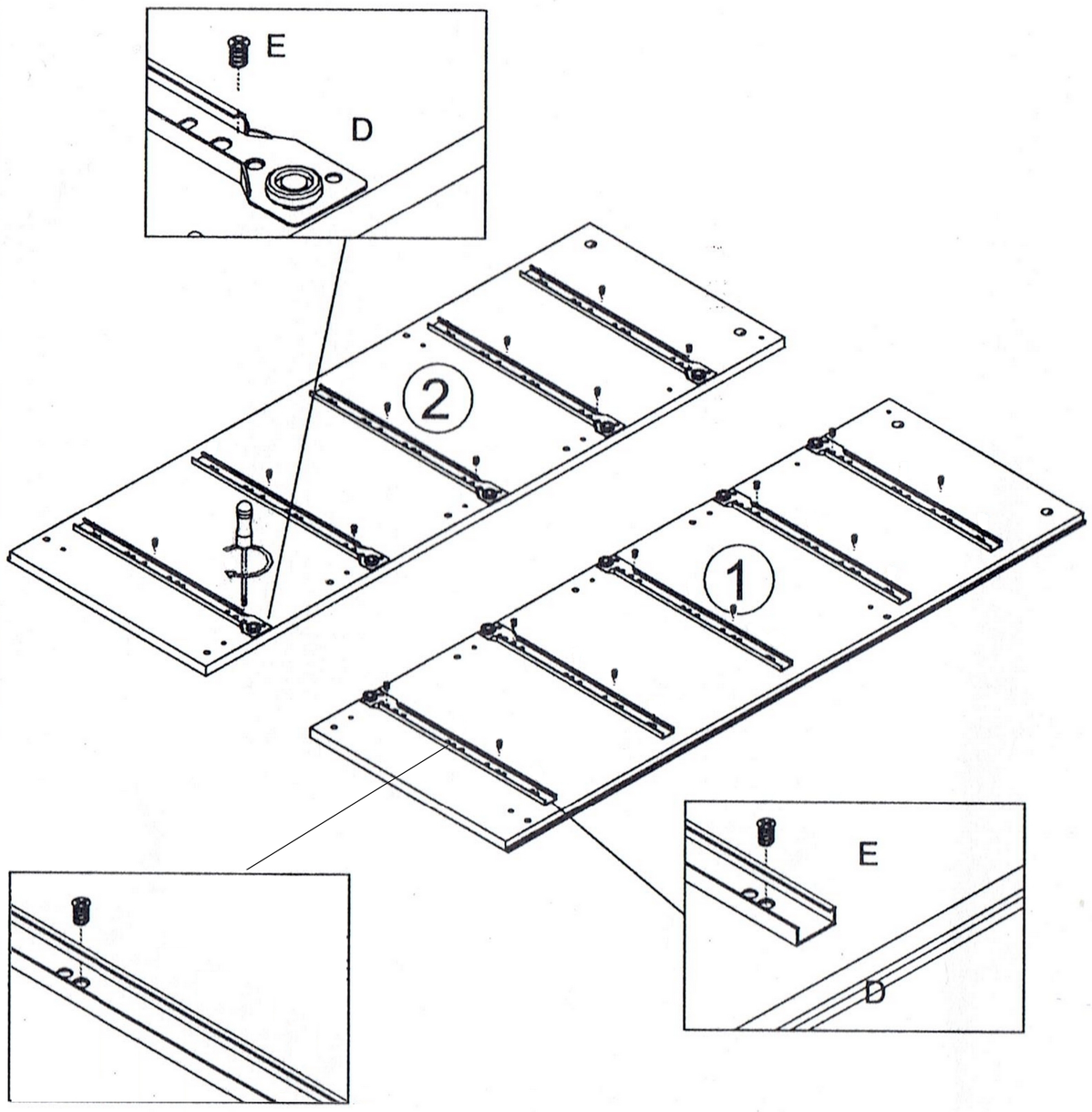

2

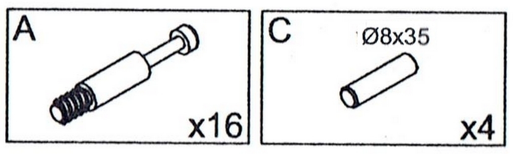

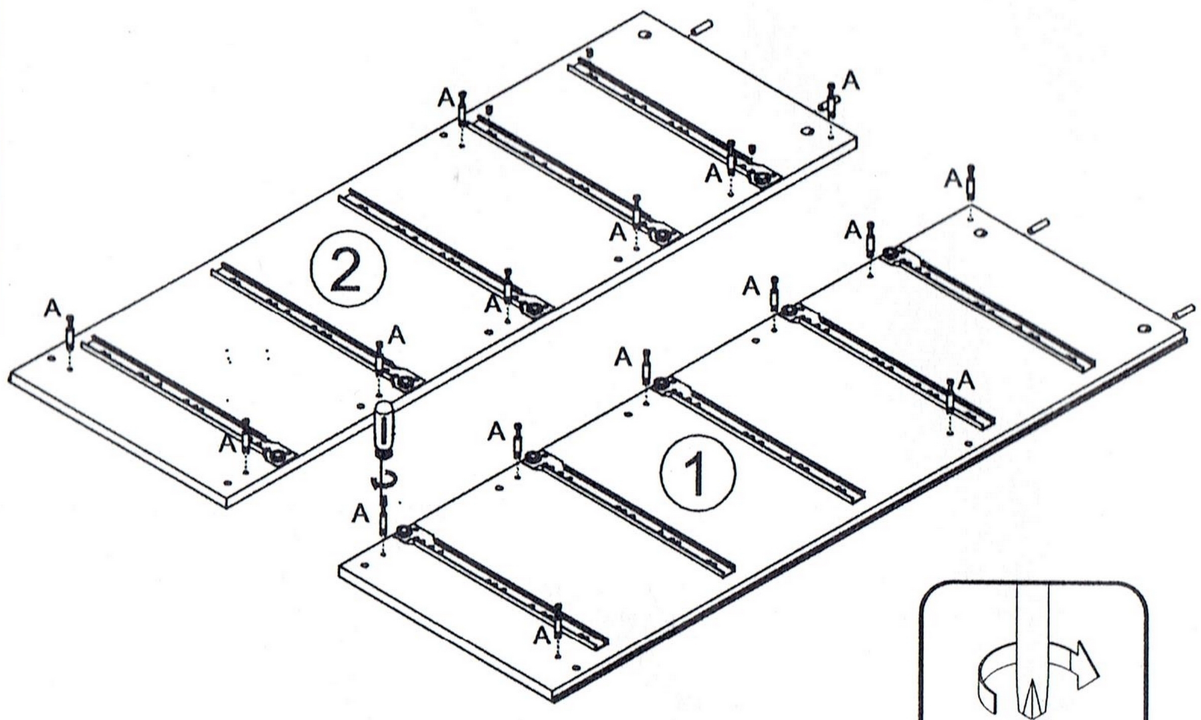

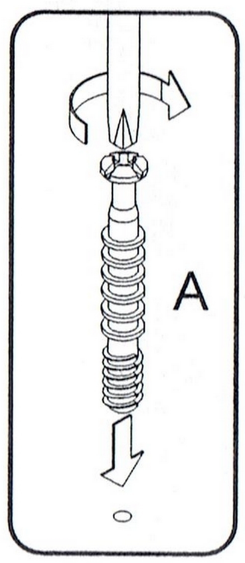

3

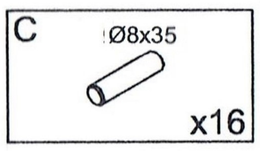
C
Ø8x35
x16

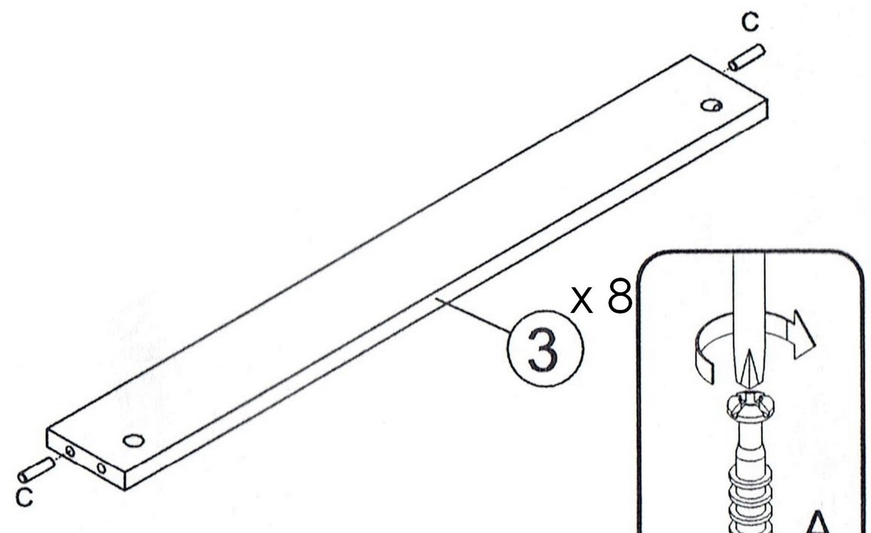
C
C
3
x 8
A

A
x4

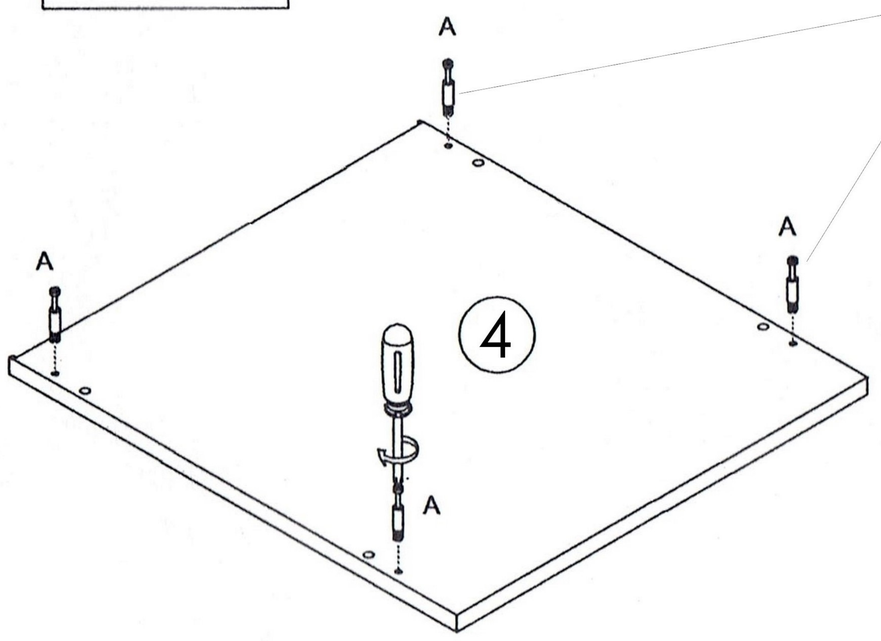
A
A
A
A
4

4

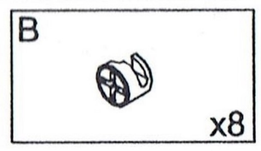
B
x8

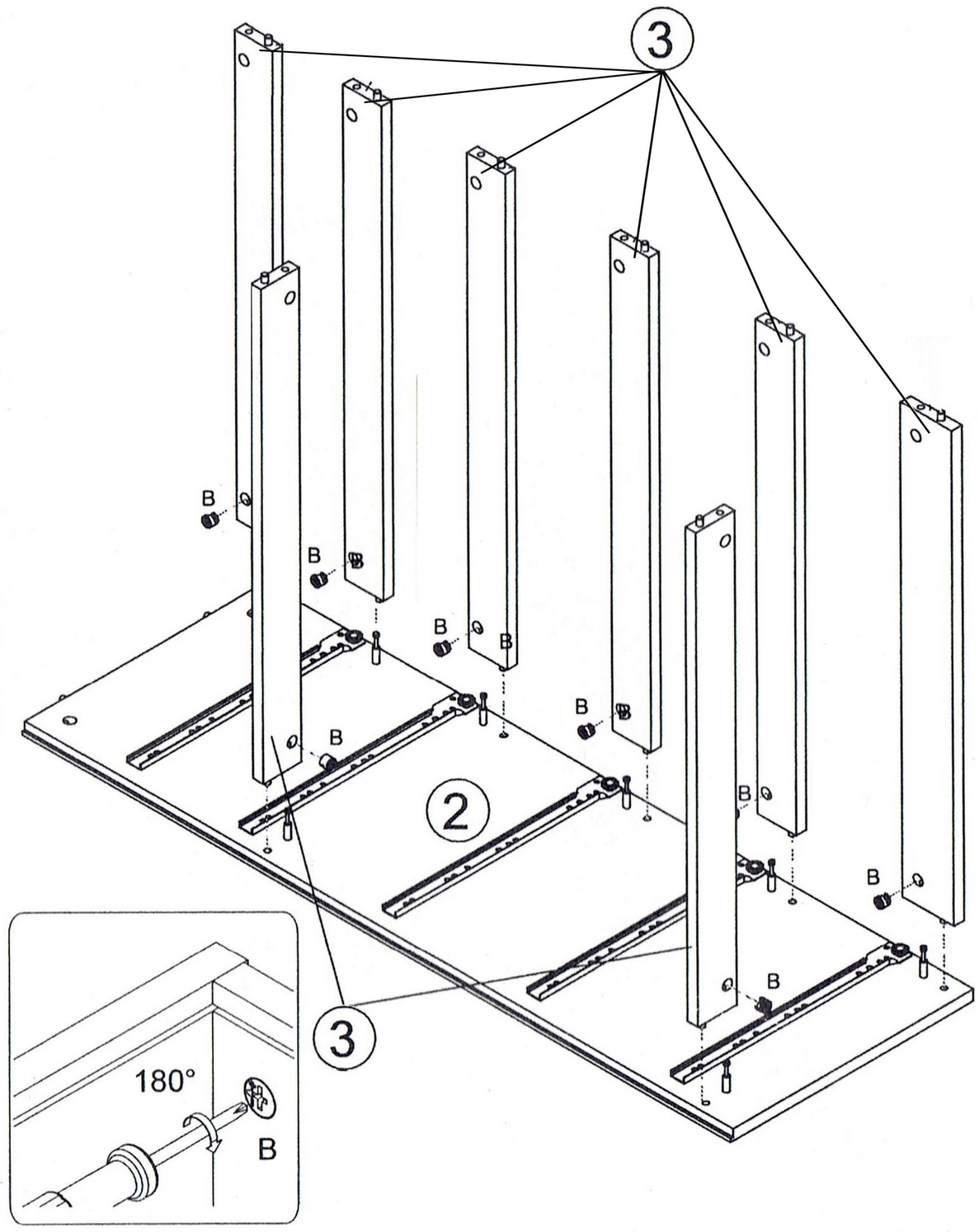
3
B
B
B
B
B
B
B
B
B
2
3
180°
B

5

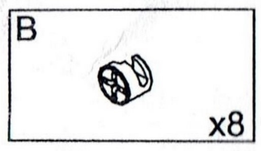
B
x8

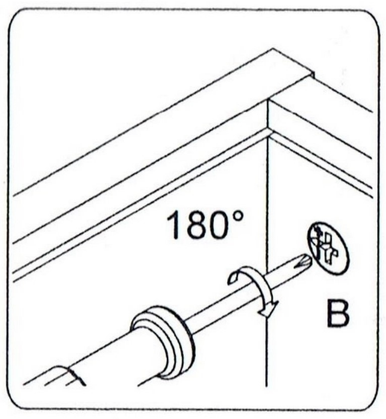
180°
B

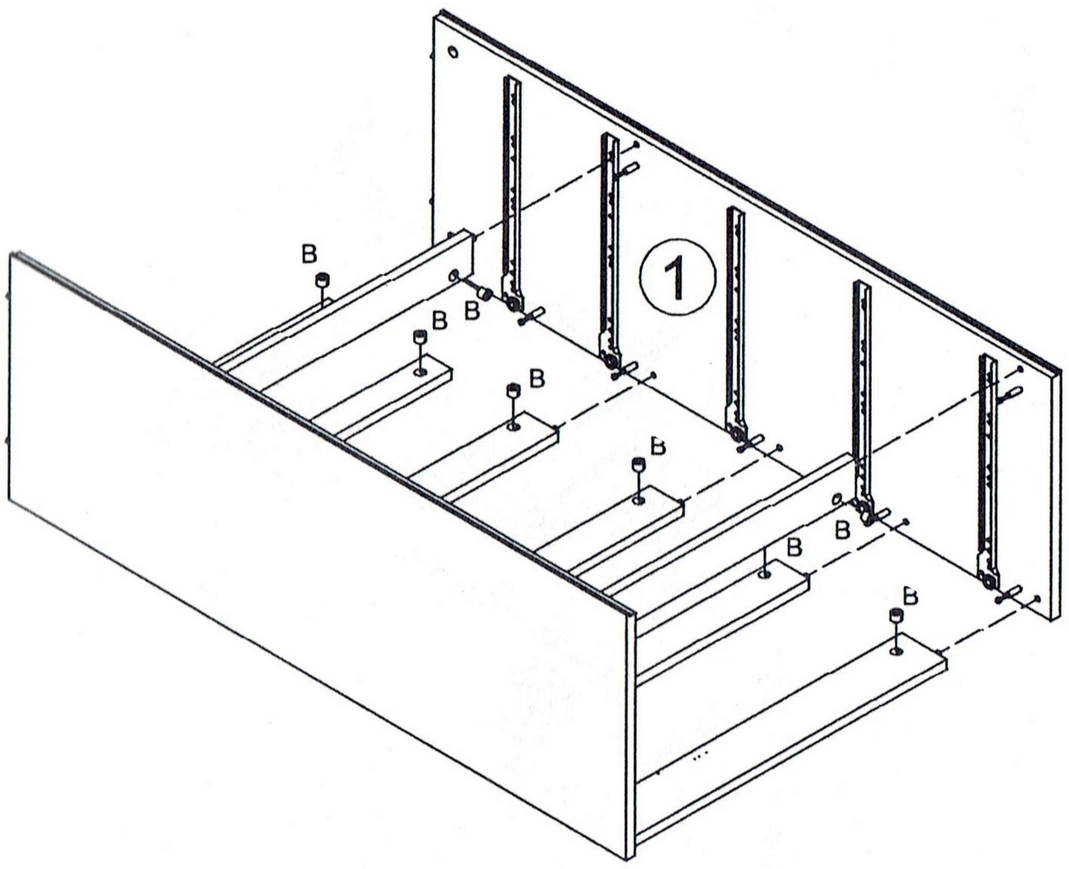
B
B
B
B
B
B
B
B
1

6

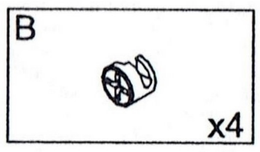
B
x4

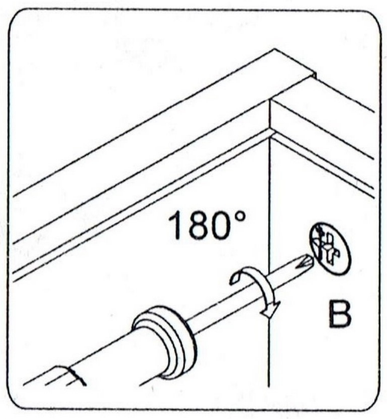
180°
B

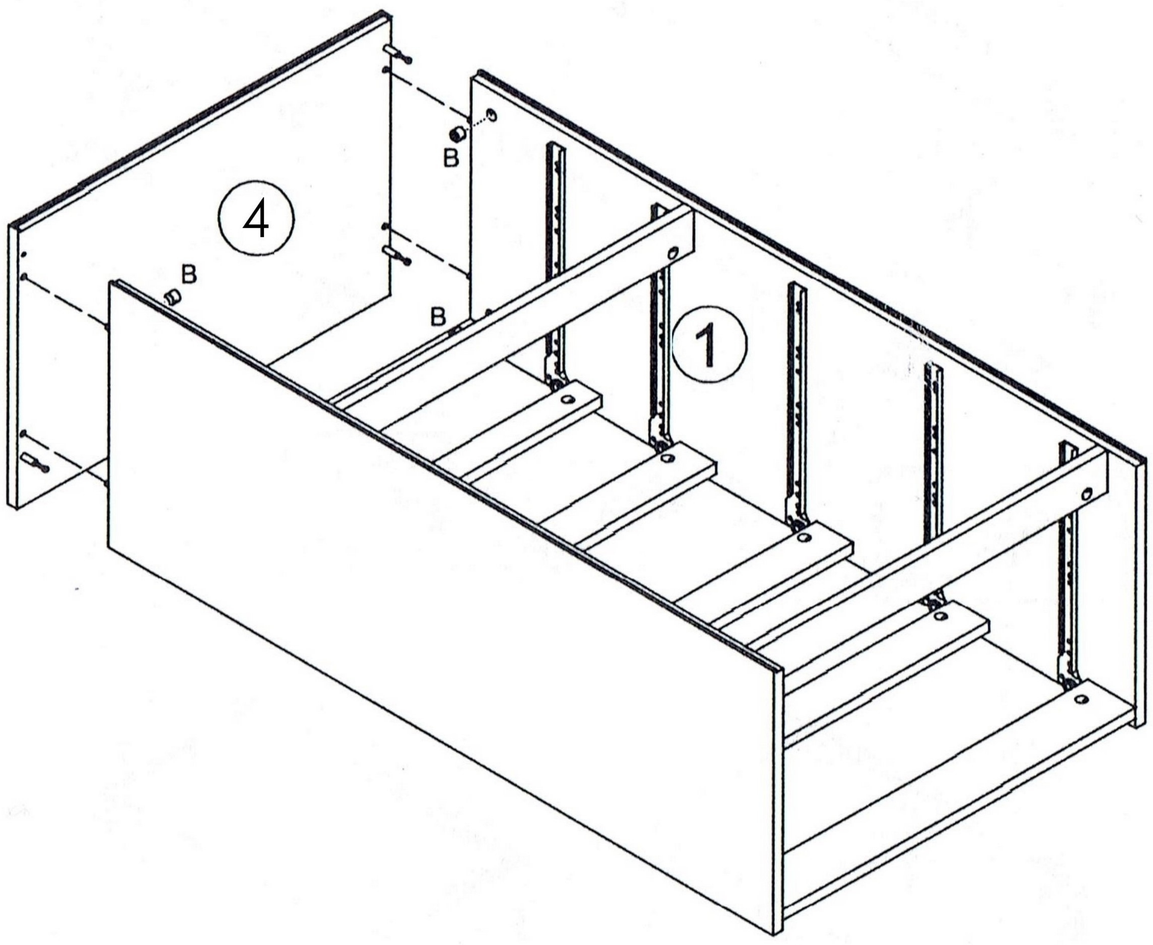
B
4
B
B
1

7

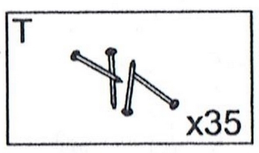
T
x35

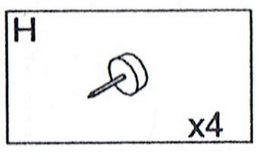
H
x4

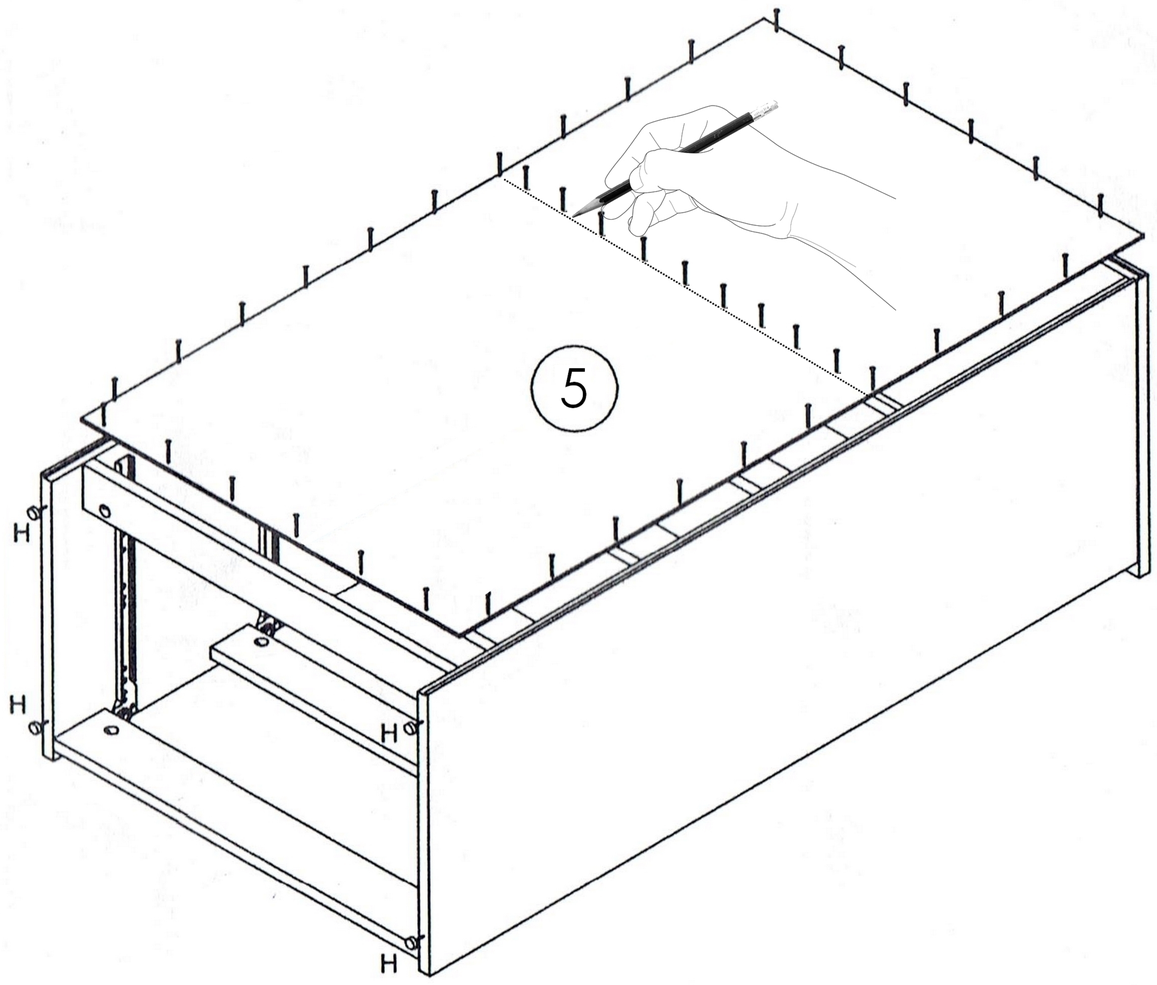
5
H
H
H
H

8

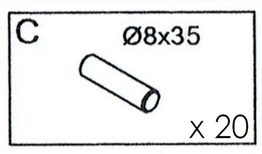
C
Ø8x35
x 20

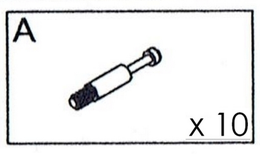
A
x 10

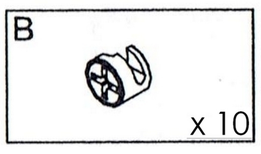
B
x 10

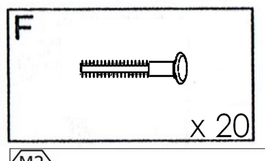
F
x 20

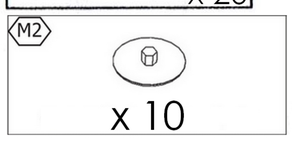
M2
x 10

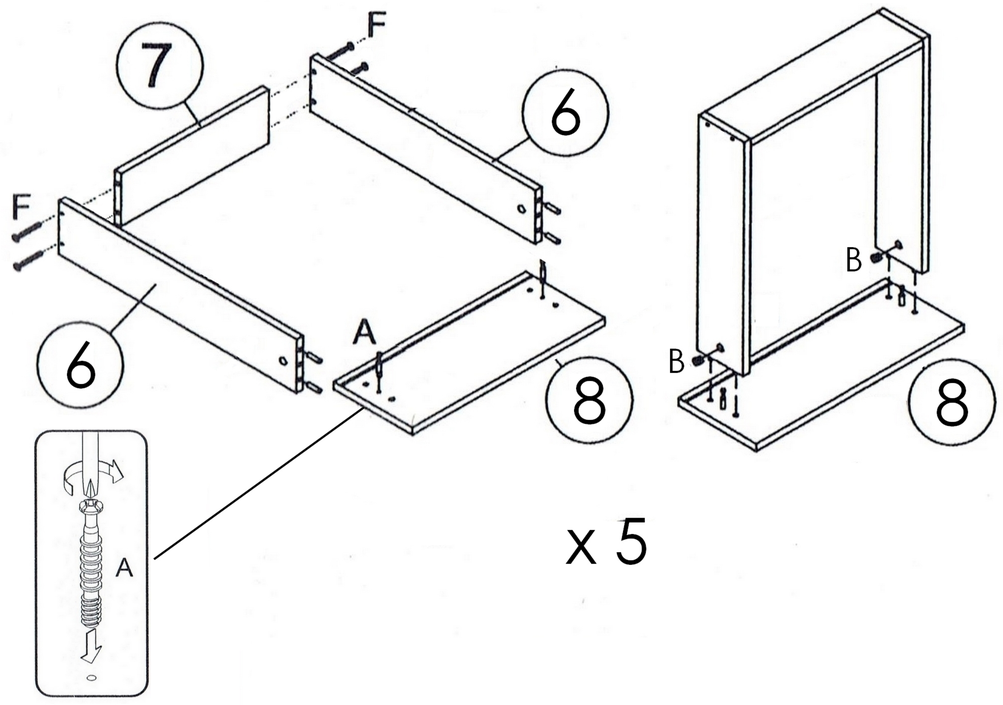
7
F
6
F
6
A
8
B
B
8
A
x 5

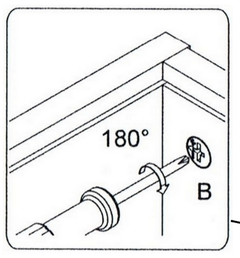
180°
B

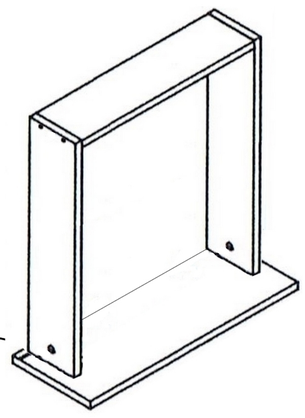

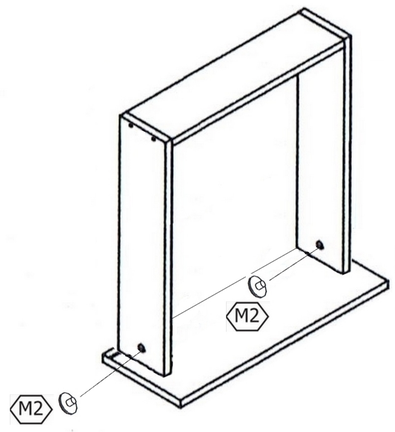
M2
M2

9

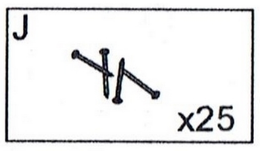
J
x25

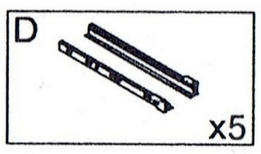
D
x5

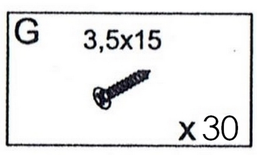
G
3,5x15
x 30

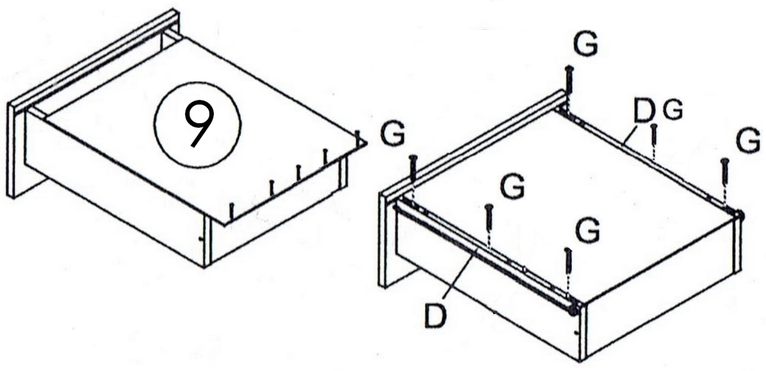
9
G
G
DG
G
G
G
D

x 5

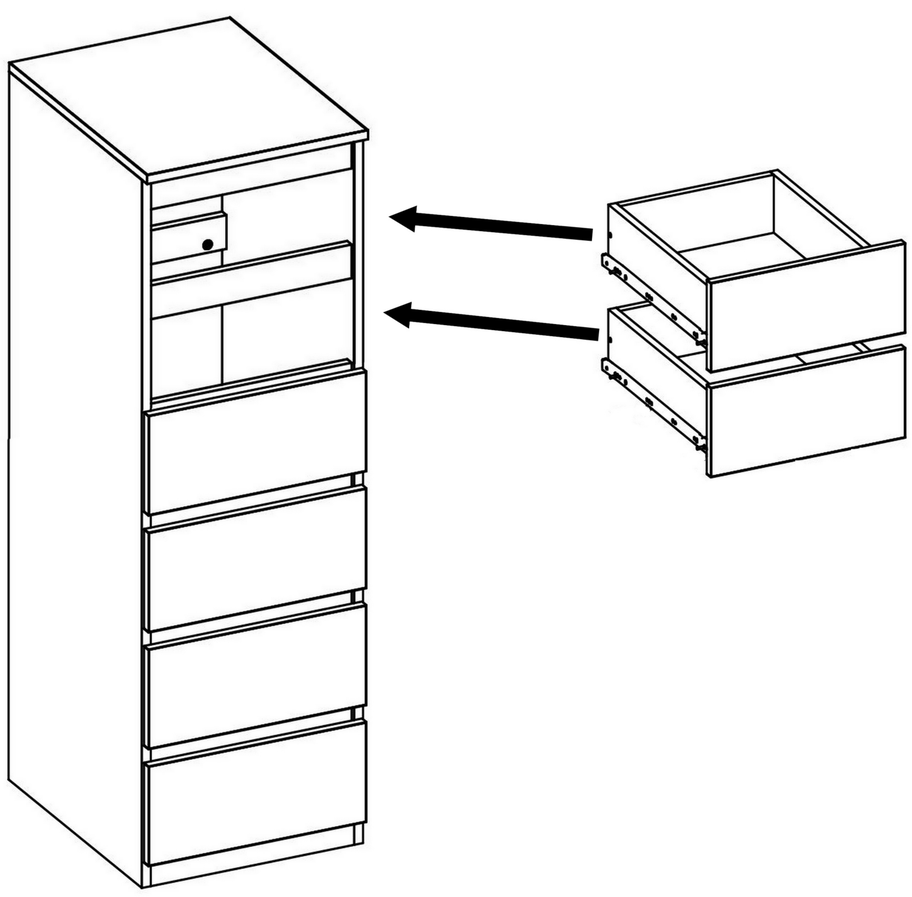

10

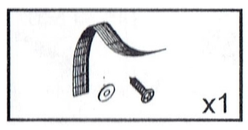
x1

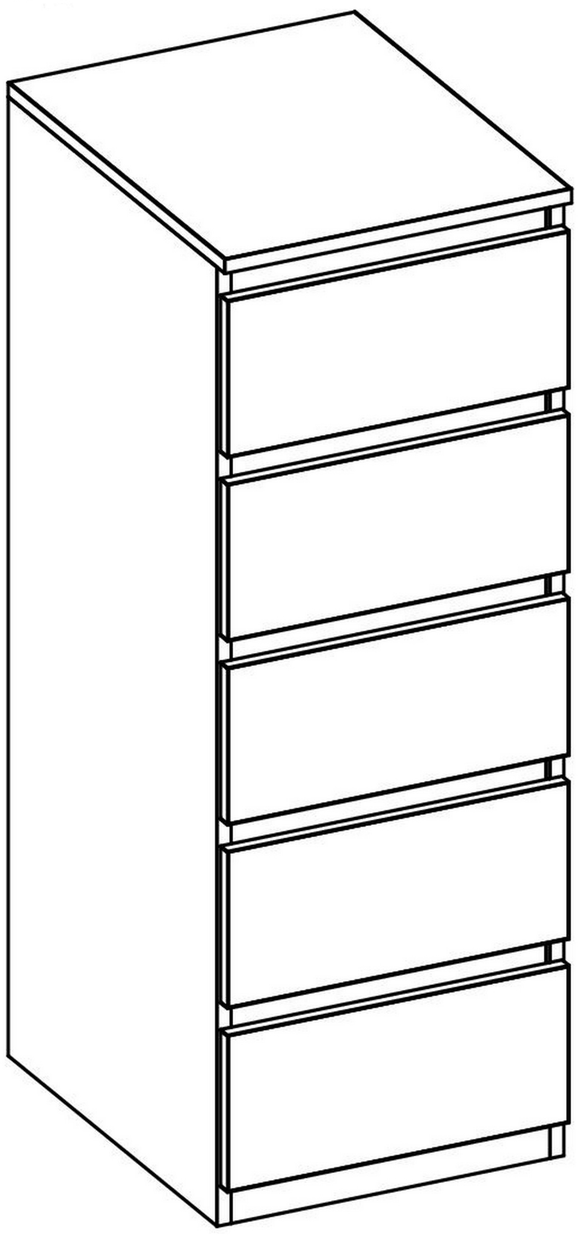

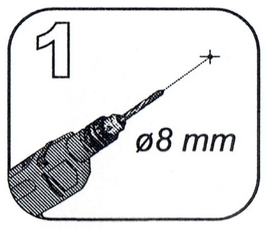
1
ø8 mm

2

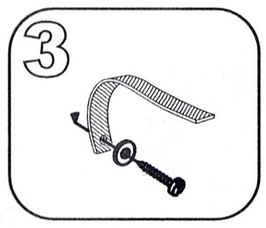
3

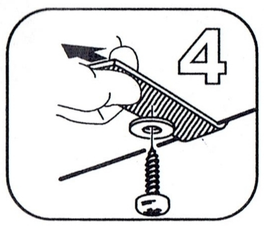
4