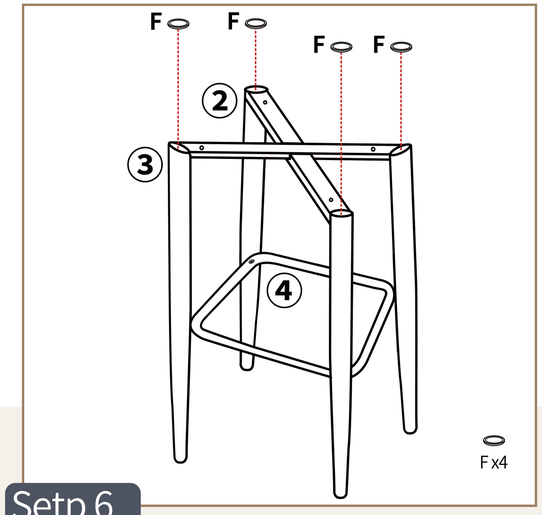

Setp 6

Put 4 pcs Plastic protection tabs **F** on the metal legs (Step 5). This will usually come pre-assembled from the factory.

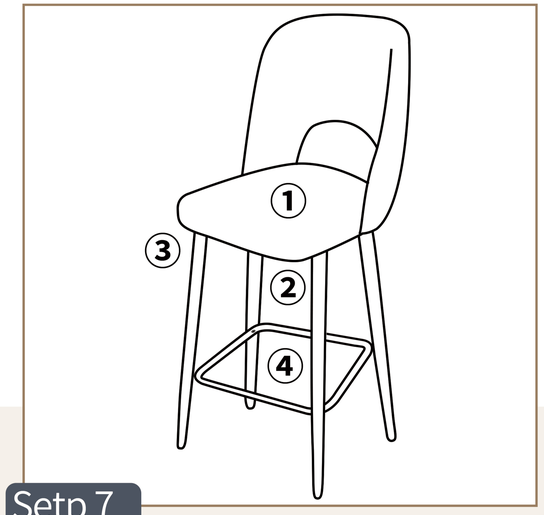

Setp 7

The legs of the table labeled "Front" are placed over the front, and then the Seat ① is placed.

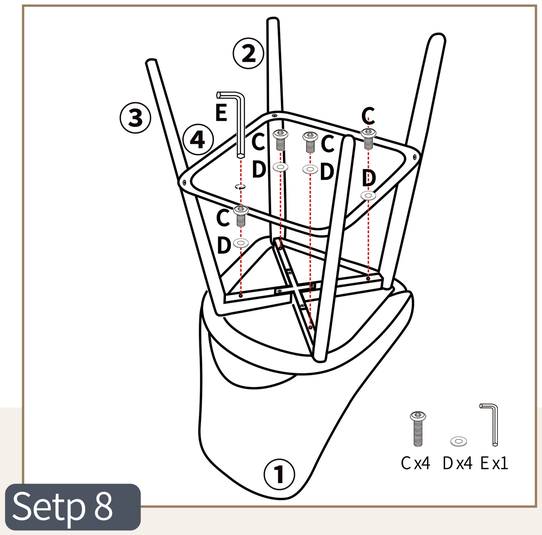

Setp 8

Put 4 pcs Plastic protection tabs **F** on the metal legs (Step 5). This will usually come pre-assembled from the factory.

Setp 9

FINISH

EXPLODED VIEW

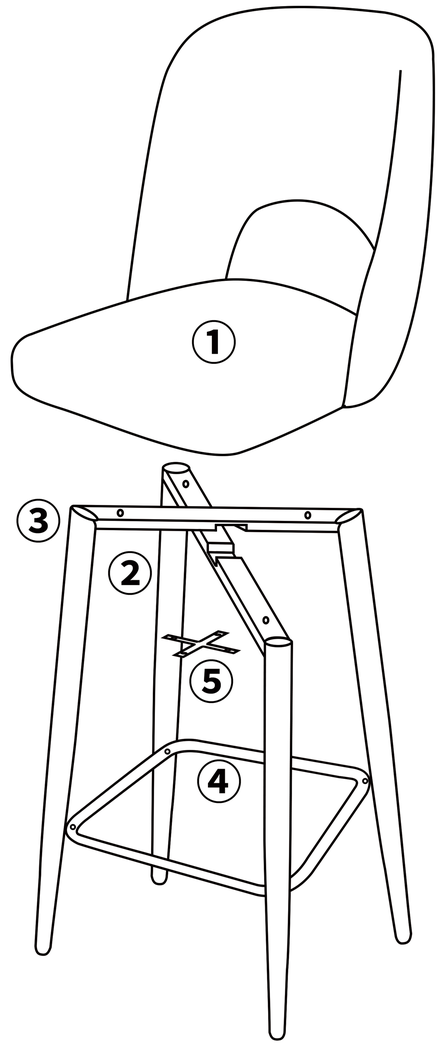

PARTS LIST

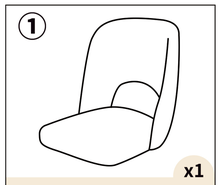

① x1 Seat

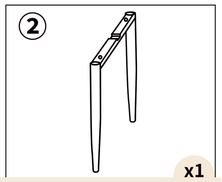

② x1 Half of the steel frame

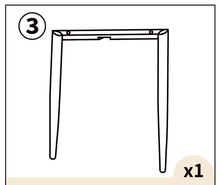

③ x1 Half of the steel frame

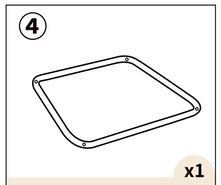

④ x1 Foot pedal

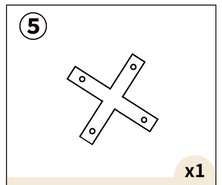

⑤ x1 Cross frame fixing piece