ASSEMBLY AND INSTALLATION INSTRUCTIONS

Model: CA2662-WP

WARNING: TO AVOID RISK OF ELECTRICAL SHOCK, BE SURE TO SHUT OFF POWER WHILE INSTALLING OR SERVICING THIS FIXTURE

NOTES:1. Before installing, consult local electrical codes for wiring and grounding requirements.
2. Read and save these instructions.

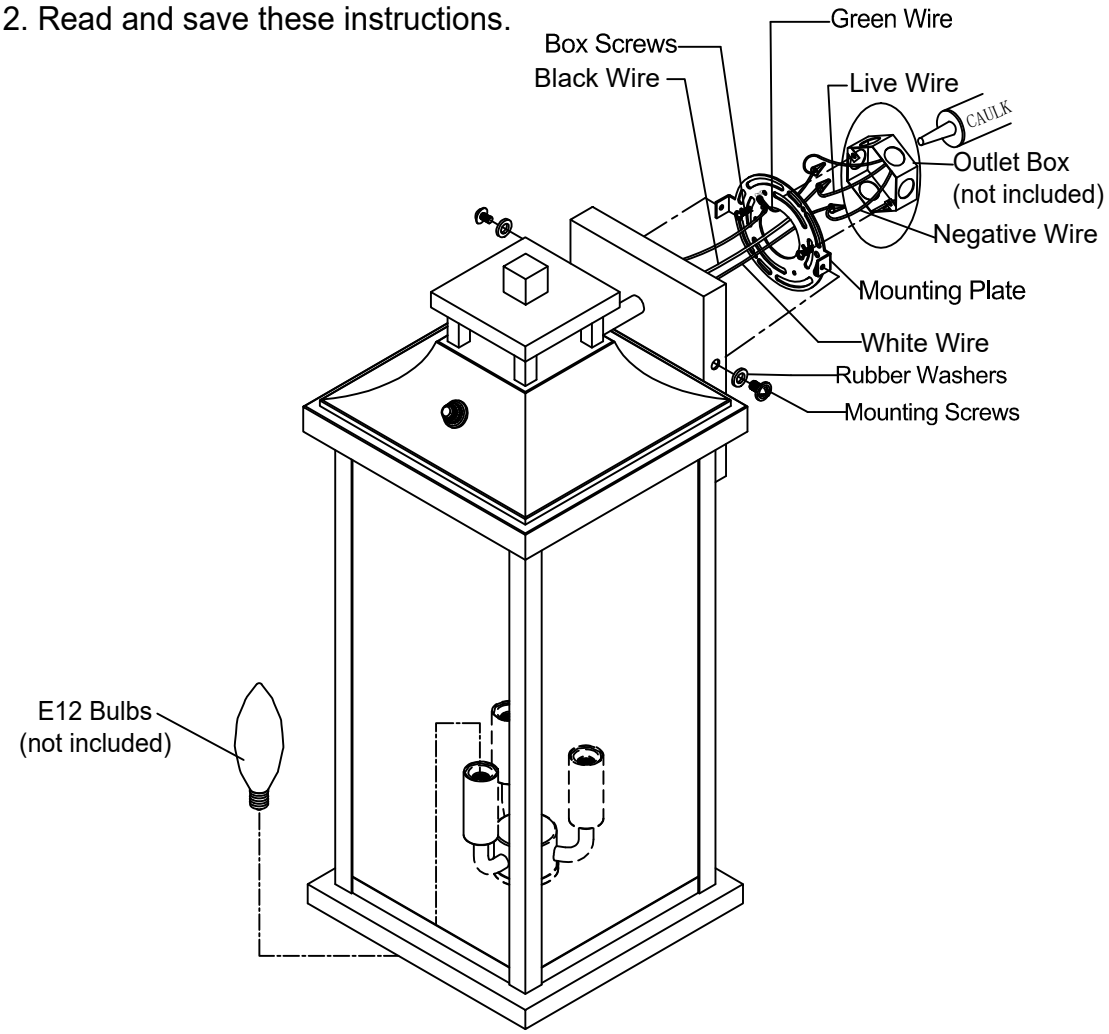

1.Attach the mounting plate to the outlet box by using two mounting screws.
2.Pull out the wires and grounding wire from the outlet box. Make wire connections using the wire nuts, as follow:
---Connect the hot wire(usually black insulation)from the fixture to the black wire from the power source.
---Connect the neutral wire(usually white insulation)from the fixture to the white wire from the power source.
---Attach the fixture grounding wire (usually green insulation or bare wire)to the mounting strap with the green grounding screw.Then connect it to the house grounding wire with the wire nut. Carefully put the wires back into the outlet box.
3.Insert the back panel of the lamp body onto the mounting plate, align the side holes of the back panel with the side teeth holes of the mounting plate, and fix them with two washers and screws.
4.Install three E12 bulbs (Bulbs not included)

CAUTION: With silicone caulking compound,caulk completely around where the back plate meets with the wall surface to prevent water from seeping into the outlet box.

Turn on the power at fuse or circuit box.