LINIA Shampoo Shelf

with Support Rail

HEALTHCRAFT
Embrace life.

Technical Data Sheet

Product Specification

The product shall be a combination shampoo shelf and rectilinear grab bar. The product shall have sliding covers that conceal the mounting hardware. All components of the product shall be constructed of #304 stainless steel, suitable for use in wet environments. The grab rail shall have a 0.8x1.2" / 20x30mm cross- section. The product shall have a weight capacity of 500lbs / 227kg. Product shall comply with ADA Guidelines, specifying the structural strength of grab bars, tubs and shower seats. The grab rail shall be HealthCraft model LINIA-SHSXX-XX (see table below for appropriate product code).

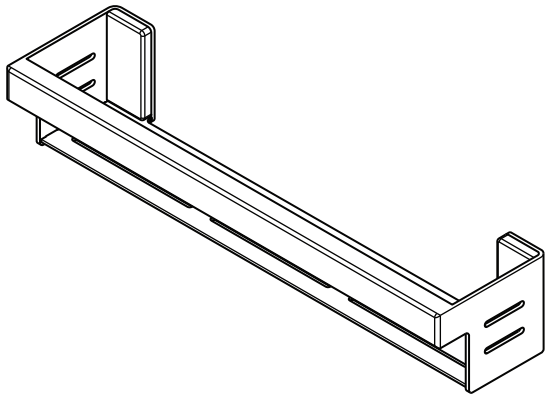

Key Features

- 2-in-1 Bathroom Accessory with Integrated Support
- Solid Construction and Mounting
- Suitable For Use in a Wet Environment
- 500lbs / 227kgs Weight Capacity*

Codes and Standards

- ADA 609.2 Cross Section
- ADA 609.8 Structural Strength

Specified Model

MODEL	LENGTH	AA - FINISH	MATERIAL
LINIA-SHS16-AA	16″ (406mm)	CP (Polished Chrome) BS (Brushed Stainless) BLK (Matte Black) GD (Brushed Gold) ORB (Oil Rubbed Bronze)	#304 Stainless Steel
LINIA-SHS24-AA	24″ (610mm)		

Patent Pending.

www.healthcraftproducts.com
Toll-free: 1-888-619-9992

LINIA Shampoo Shelf

with Support Rail

HEALTHCRAFT
Embrace life.

Technical Data Sheet

Product Dimensions

Model	Total Length (L)	Install Length (N)
SHS16	18″ / 455mm	16″ / 406mm
SHS24	26″ / 658mm	24″ / 610mm

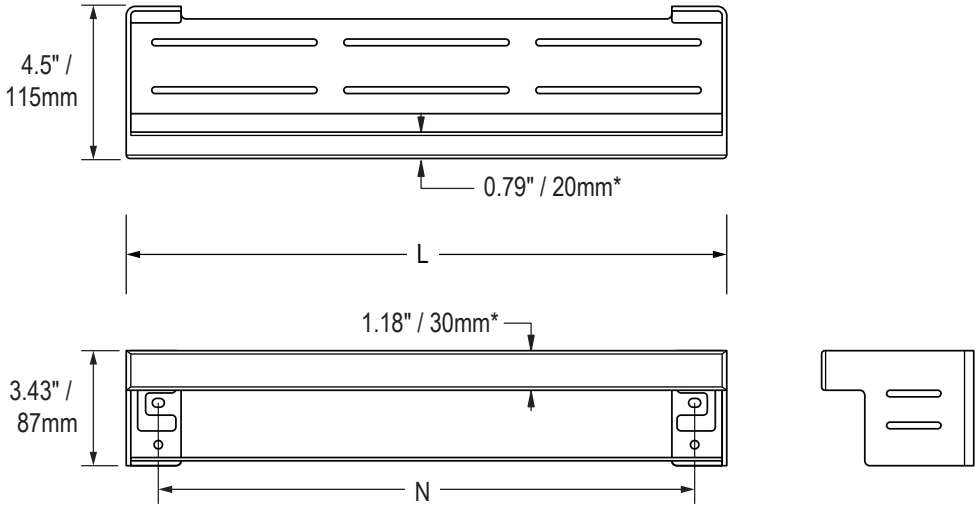

*ADA Compliant

Shipping Dimensions

Model	Height (H)	Width (W)	Depth (D)	Weight
SHS16	3.7" / 9.5cm	18.3" / 46.5cm	4.9" / 12.5cm	4.25lbs / 1.9kg
SHS24	3.7" / 9.5cm	26.4" / 67cm	4.9" / 12.5cm	6.15lbs / 2.8kg

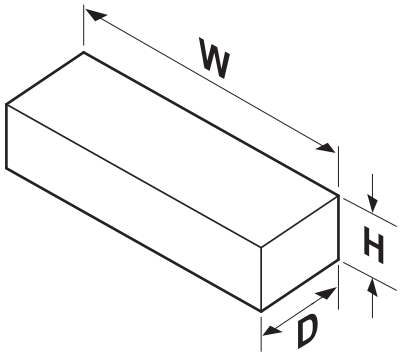

www.healthcraftproducts.com
Toll-free: 1-888-619-9992