CANDLE LED GLASS PENDANT

INSTALLATION INSTRUCTIONS

Thank you for purchasing Integrated LED Lighting Fixtures!

TROUBLESHOOTING:

- Check that line voltage at fixture is correct.
- Ensure that there is voltage at lamp fixture wires. If there is no voltage, then check all connections.
- Check that fixture is grounded properly.

If fixture does not light:

- Check switch to ensure that there are no defects.
- Check fuse/circuit breaker for trips, then check wiring connections.

CLEANING AND MAINTENANCE:

CAUTION: Ensure fixture temperature is cool enough to touch. DO NOT clean or perform maintenance while fixture is energized.

- Clean lens and fixture with non-abrasive cleaning solution.
- Do not open fixture to clean LED. Do not touch the LED.
- Do not spray liquid directly on to LED, LED driver or wiring.

Please read carefully before installing fixture.

Save these instructions, as you may need them at a later date.

Please follow the following steps for installation.

WARNINGS:

Turn power off before installation, inspection, or removal. Use all necessary precautions while performing this procedure.

Consult a qualified electrician to ensure correct branch circuit conductor. Min 90°C supply conductors.

Properly ground electrical enclosure. IT IS IMPERATIVE THAT THE OUTLET BOX BE PROPERLY GROUNDED.

DO NOT REVERSE THE HOT AND NEUTRAL CONNECTIONS, OTHERWISE SAFETY WILL BE COMPROMISED.

This Integrated LED Fixture has no lamp/bulb to replace.

Do not remove or touch the inside of plastic lens covering the LED board.

GENERAL: All electrical connections must be in accordance with local and National Electrical Code (N.E.C.) standards. If you are unfamiliar with proper electrical wiring connections, contact and obtain the services of a qualified electrician. Use UL or IEC approved wire only for input/output connections.

Remove fixture and mounting components from the box, and make sure that no parts are missing by referencing the illustration in the installation instructions.

DIMMING: *This product is compatible with most common residential type dimmers. Dimming performance will depend upon dimmer, dimmer settings (dimmers with adjustments to brightness range), wiring method, and number of LED modules. For best results, set dimmer position at maximum before adjusting to a lower light level.*

Figure 1

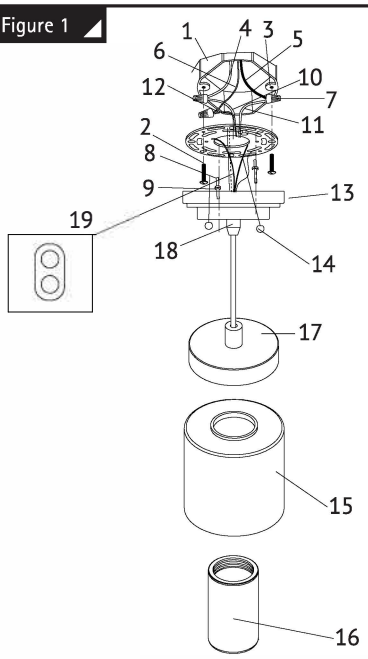

1. OUTLET BOX (NOT INCLUDED)
2. MOUNTING SCREWS
3. MOUNTING BRACKET
4. WHITE SUPPLY WIRE
5. BLACK SUPPLY WIRE
6. SUPPLY GROUND WIRE
7. WIRE NUTS
8. #8-32 FIXTURE MOUNTING SCREWS
9. #8-32 HEX NUTS
10. WHITE FIXTURE WIRE
11. BLACK FIXTURE WIRE
12. FIXTURE GROUND WIRE
13. FIXTURE BASE
14. DECORATIVE NUTS
15. GLASS SHADE
16. RETAINING RING
17. SHADE BASE
18. SET SCREW
19. STRAIN RELIEF

1 SHUT OFF MAIN ELECTRICAL SUPPLY FROM THE MAIN FUSE BOX/CIRCUIT BREAKER!

2 Remove contents from box. Ensure that no parts are missing. Reference the illustration included with this instruction manual.

3 **NOTE:** Before installing your new light fixture, adjust the height at which it will hang by releasing the SET SCREW (18) and pulling the cord through the FIXTURE BASE (13) to the desired length.

4 Once at the desired length, tighten the SET SCREW (18) and move the STRAIN RELIEF (19) to the bottom of the FIXTURE BASE (13).

5 The excess cord may be cut using wire cutters. Reattach the wire using WIRE NUTS to secure the wire.

6 **Now follow the instructions for light fixture installation.**
Attach the #8-32 FIXTURE MOUNTING SCREWS (8) to the MOUNTING BRACKET (3).

7 Place the #8-32 HEX NUTS (9) onto the #8-32 FIXTURE MOUNTING SCREWS (8).
Do not tighten the #8-32 HEX NUTS (9) at this time.

8 Locate the BLACK AND WHITE SUPPLY WIRES (4 & 5) and the SUPPLY GROUND WIRE (6), and remove them from the OUTLET BOX (1).

9 Make the following wire connections (Fig.1), using the provided WIRE NUTS (7):
WHITE (-) SUPPLY WIRE (4) TO WHITE FIXTURE WIRE (10)
BLACK (+) SUPPLY WIRE (5) TO BLACK FIXTURE WIRE (11)
SUPPLY GROUND WIRE (6) TO FIXTURE GROUND WIRE (12)
If necessary, wrap all wire connections in electrical tape to ensure secure connection.

10 Carefully tuck all wiring back into the OUTLET BOX (1).

11 Attach the MOUNTING BRACKET (3) to the OUTLET BOX (1) using the holes on the MOUNTING BRACKET (3) and the provided MOUNTING SCREWS (2).

12 Align the FIXTURE BASE (13) over the OUTLET BOX (1) and thread the #8-32 FIXTURE MOUNTING SCREWS (8) into the appropriate holes so that they protrude out of the FIXTURE BASE (13) 1/4".

13 Remove the FIXTURE BASE (13) from the OUTLET BOX (1), and secure the position of the #8-32 FIXTURE MOUNTING SCREWS (8) by tightening the #8-32 HEX NUTS (9) against the MOUNTING BRACKET (3).

14 Place the FIXTURE BASE (13) back onto the #8-32 FIXTURE MOUNTING SCREWS (8). Secure the FIXTURE BASE (13) into place using the provided DECORATIVE NUTS (14).

15 Align the GLASS SHADE (15) with the SHADE BASE (17) and secure in place using the RETAINING RING (16).

16 Restore power at fuse box/circuit breaker. Check operation of Integrated LED Fixture.

17 Installation complete.

5-YEAR LIMITED WARRANTY

LIMITED WARRANTY: This fixture is warranted to be free from defects in workmanship and material for up to 5-years. Based upon reasonable household usage, when used in accordance with package and included instructions.

This device complies with Part 15 of the Rules and has been tested and found to comply with the limits for Class B digital device. Operation is subject to the following two conditions: (1) this device may not cause harmful interference, and (2) this device must accept any interference received, including interference that may cause undesired operation. Any changes or modifications not expressly approved by manufacturer could void user's authority to operate the equipment.