ASSEMBLY INSTRUCTION

ITEM NO. THKFBV262

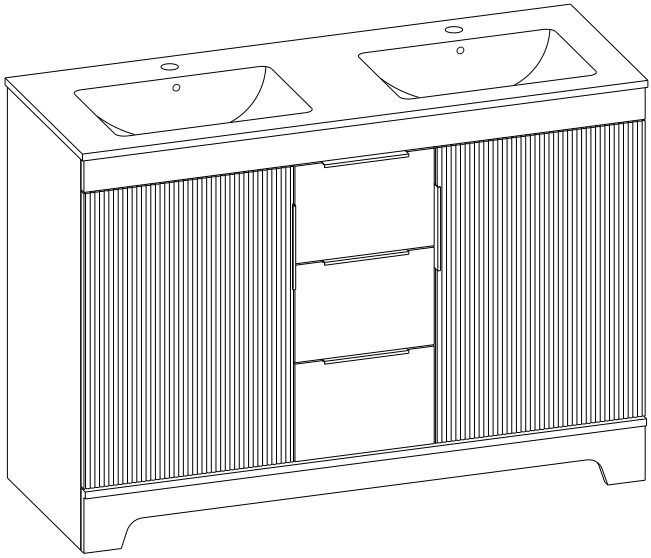

IMPORTANT NOTICE

Workspace Safety
Keep the workspace clear of clutter and ensure it's well-lit. A clean, flat surface is essential.

Read Instructions
Read the entire assembly guide before starting. Skipping steps can compromise safety.

Use Proper Tools
Use the tools provided or recommended. Avoid overtightening screws.

Secure Furniture
Anchor tall or heavy furniture to the wall to prevent tipping. This is crucial in homes with children or pets.

Handle Small Parts
Keep small parts away from children and pets to avoid choking hazards.

Get Help
Don't hesitate to ask for help with heavy or complex pieces.

Inspect Regularly
Periodically check for loose screws or wobbly parts and tighten as needed.

Follow these tips for a safe assembly process.

CARE AND CLEANING

Many cleaners contain abrasive and chemical substance which is not suitable for cleaning stainless steel, enamel, plating or plastic products. You may use mild cleansers or soaps to clean the surfaces. Wipe any splashes of cleaner solutions from the surface with a clean soft cloth.

Maintain ventilation in the bathroom and separate the dry area from the damp one if conditions permit. Try to open the door and windows of the bathroom to maintain adequate ventilation.

This cabinet is built to withstand normal bathroom humidity. For best results, keep this vanity dry and take necessary steps to minimize bathroom humidity by opening windows and doors and using the exhaust fan (if available).

To maintain the cabinet door, clean and wipe the door regularly with a soft cloth.
Wipe condensation with a dry, soft cloth. Keep away from high temperatures.

Please do not sit, lean or step on the basin cabinet.

ASSEMBLY DIAGRAM

1. Refer to the exploded view below for the approximate location of each component.
2. Each part is labeled for easy identification.
3. Follow the assembly instructions carefully to ensure proper installation.

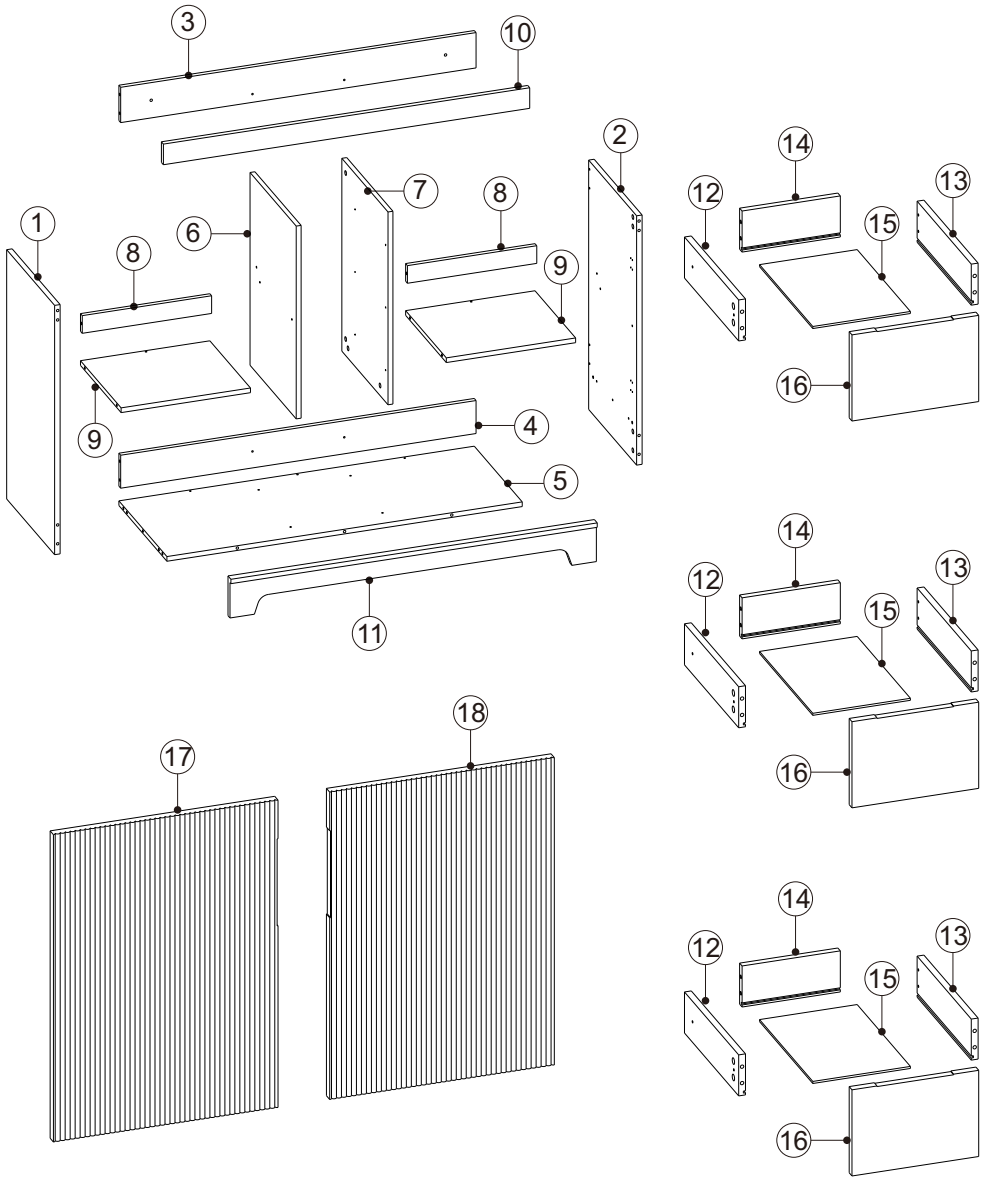

PRE-ASSEMBLY PREPARATION

Before assembly, place all furniture parts on a soft surface, such as a blanket or the original packaging cardboard, to prevent damage to the floor or components from accidental drops and to avoid scratching the surfaces.

For illustrative purposes only

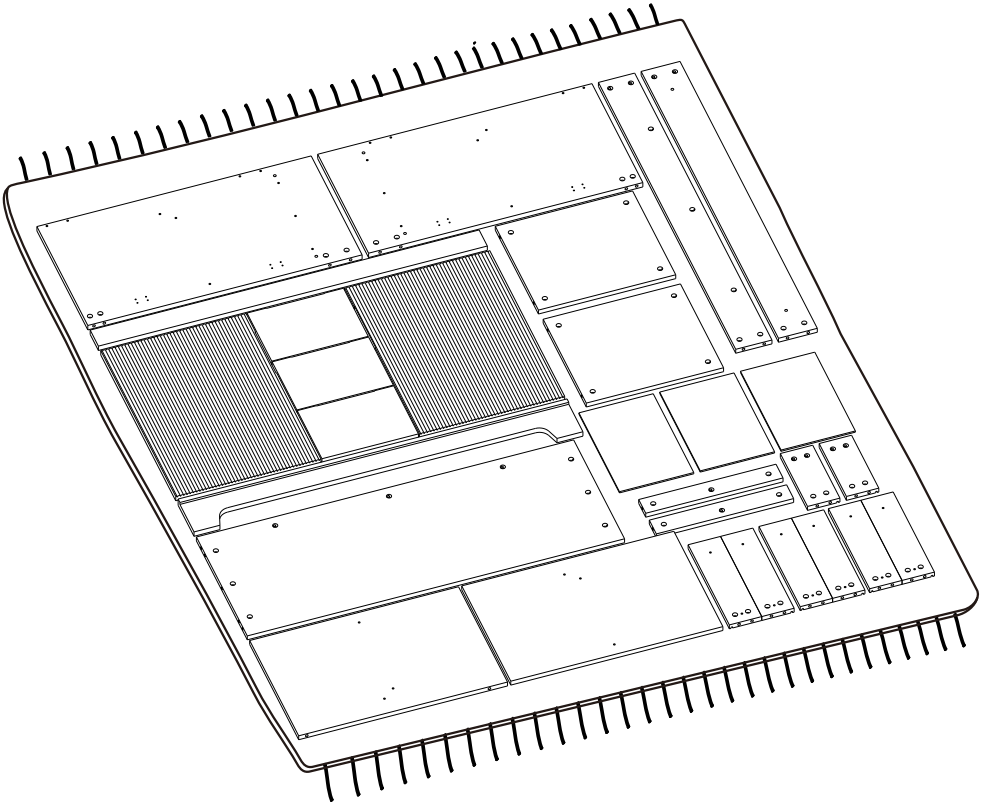

Attention: The components shown above are for illustrative purposes only and are not related to the current product.

PARTS LIST

No.	Description	QTY	No.	Description	QTY
1		1	10		1
2		1	11		1
3		1	12		3
4		1	13		3
5		1	14		3
6		1	15		3
7		1	16		3
8		2	17		1
9		2	18		1

HARDWEAR LIST

No.	Description	QTY	No.	Description	QTY
19	Three-in-one Connector	74	24	Handle	2
20	Wood Plug	4	25	Handle	3
21	ST4*14 Screws	56	26	Fixed buckle	2
22	M S Slider	6	27	For Fix On The Wall Screws	2
23	Hinges	4			

CAUTION: Please confirm the parts list before installtion

YOU MAY NEED (NOT SUPPLIED)

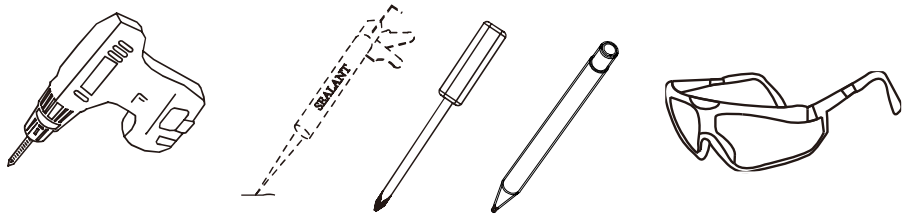

1

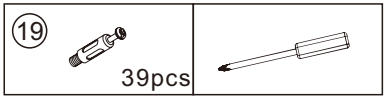

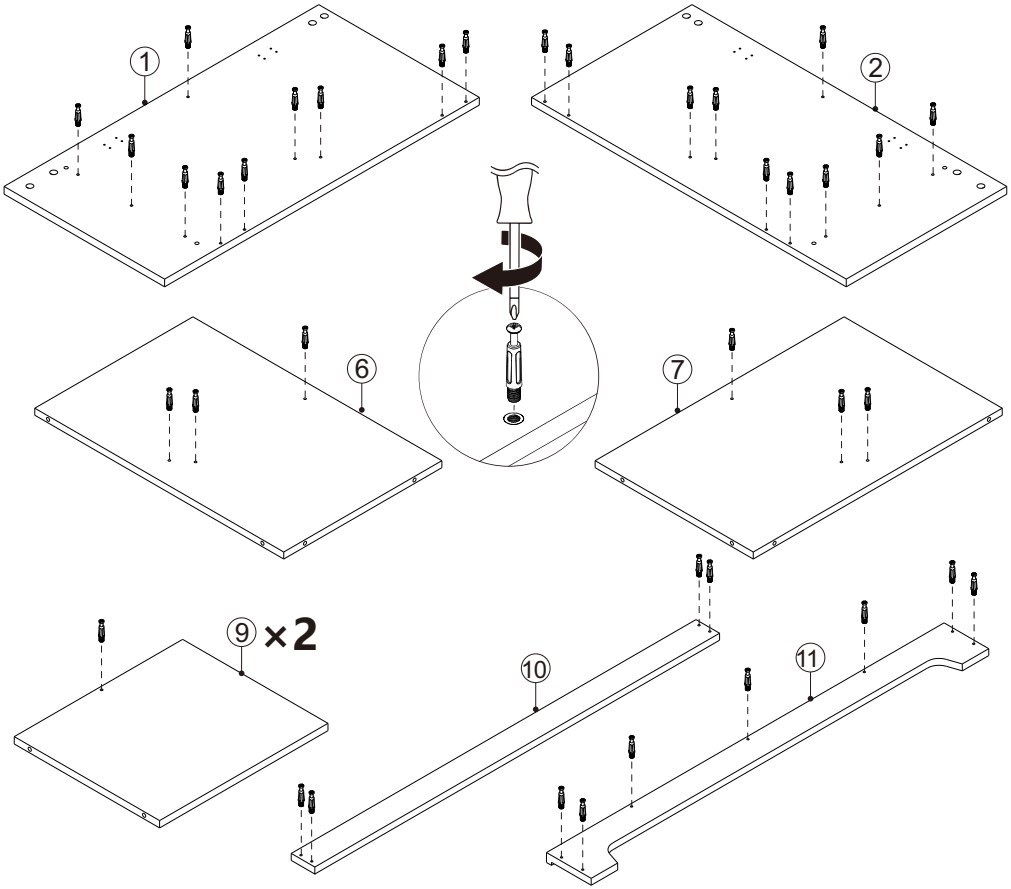

- **Insert the Cam Screw into the shelves above.**

2

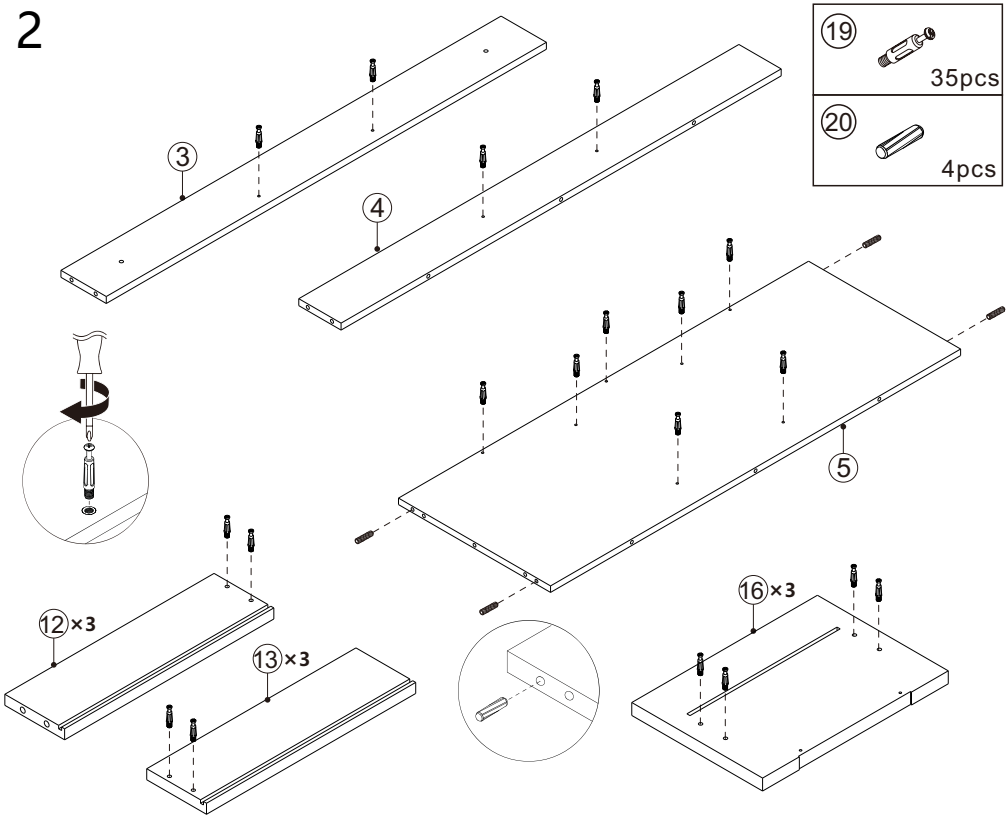

- **Insert the Cam Screw into the shelves above.**
- **Insert the wooden dowel pins into the shelves.**

3

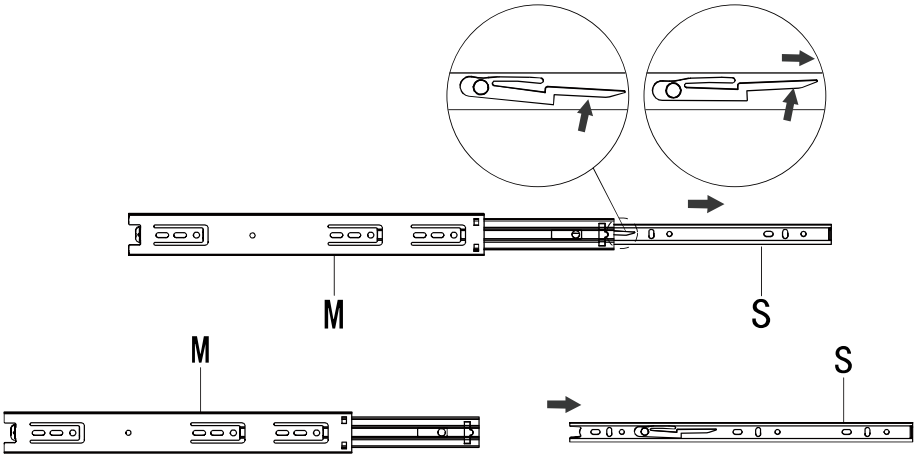

- **Keep pressing here,then pull out to devide the slide.**

4

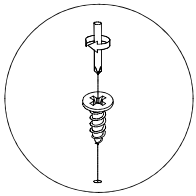

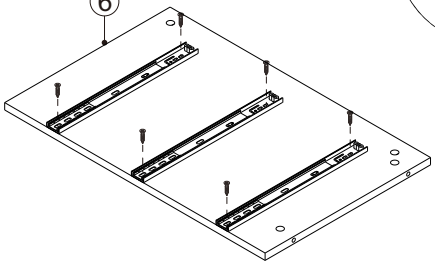

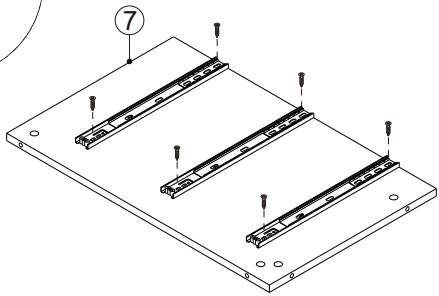

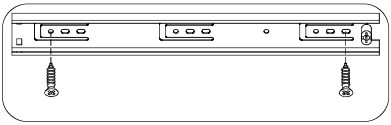

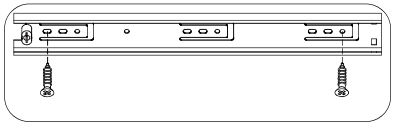

- **Refer to the illustration to fix the Slide rails to the board #6 and 7# with screws.**

5

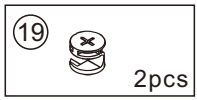

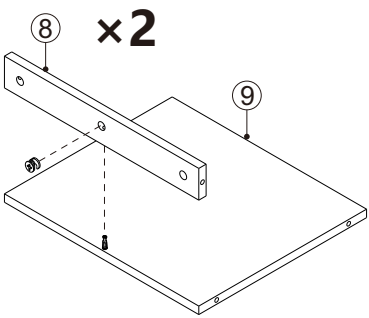

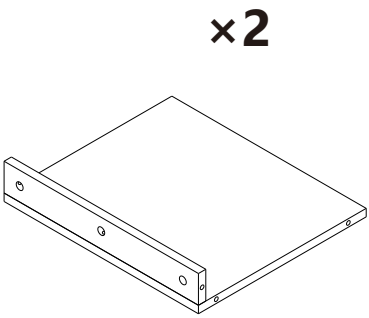

6

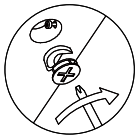

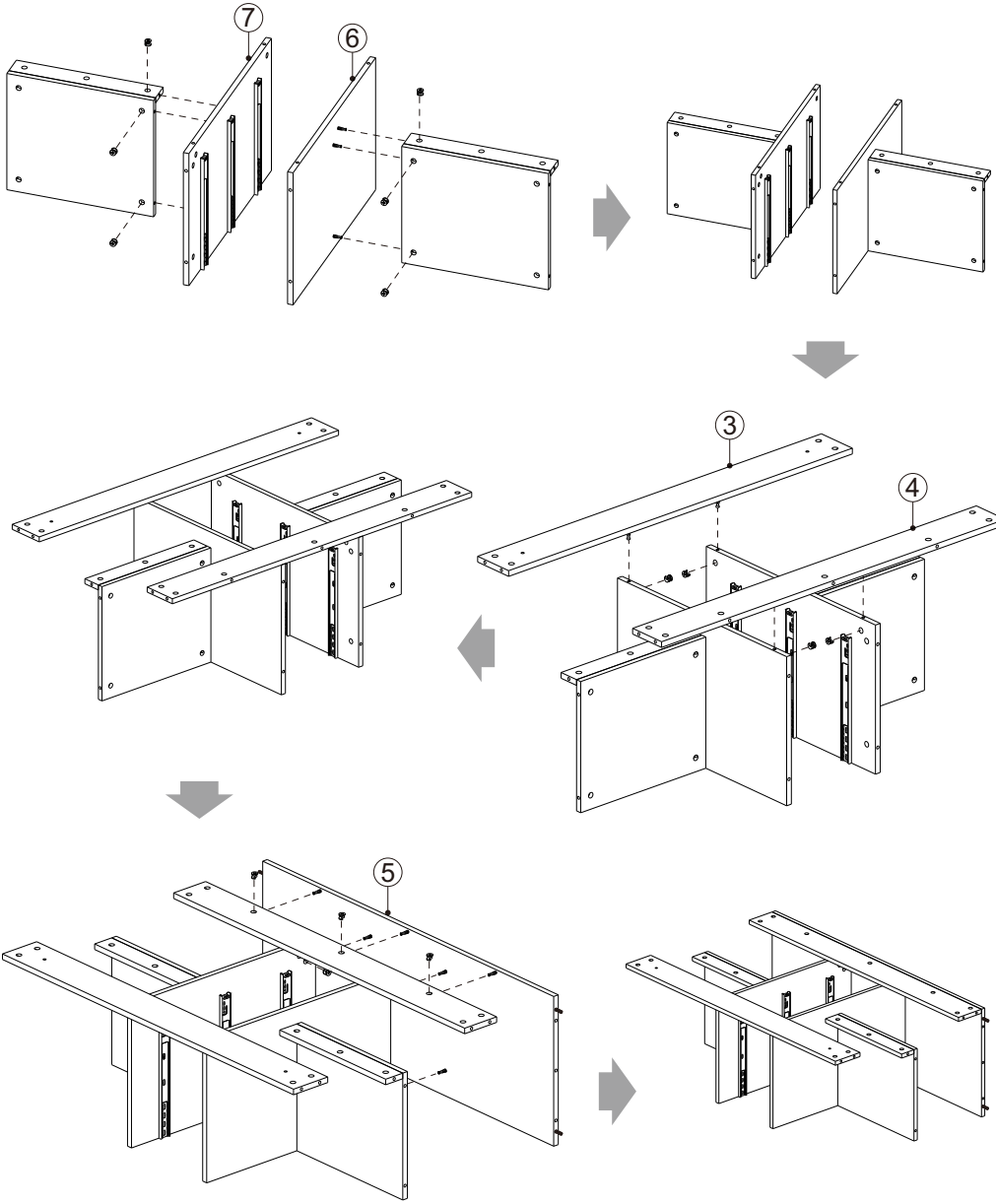

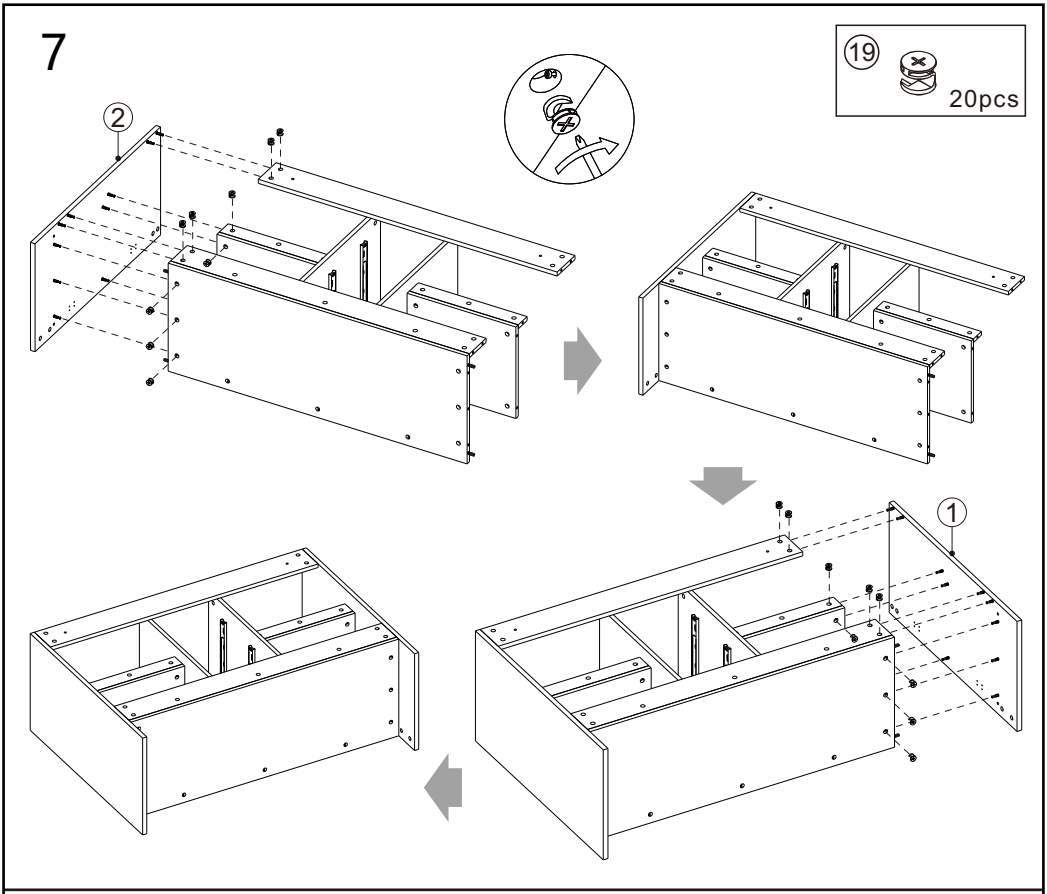
7
19
20pcs
2
1

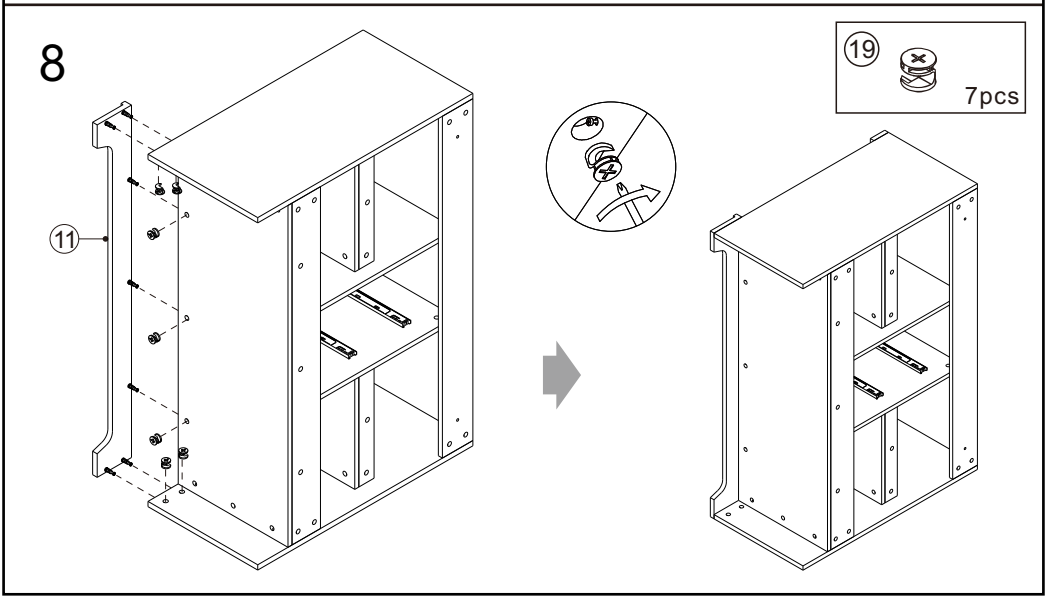
8
19
7pcs
11

9

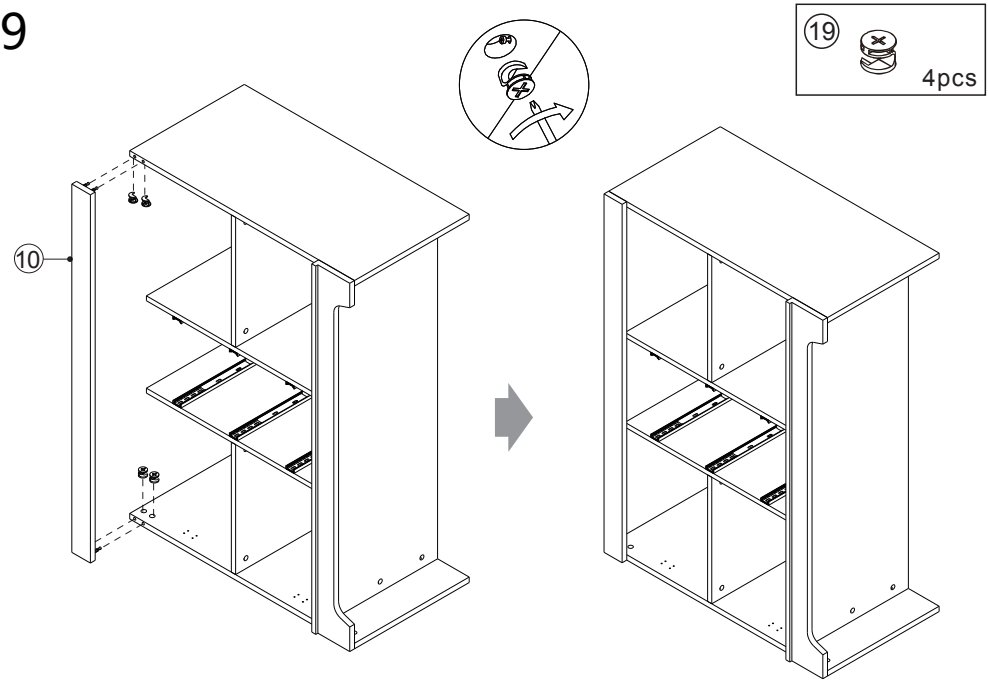

10

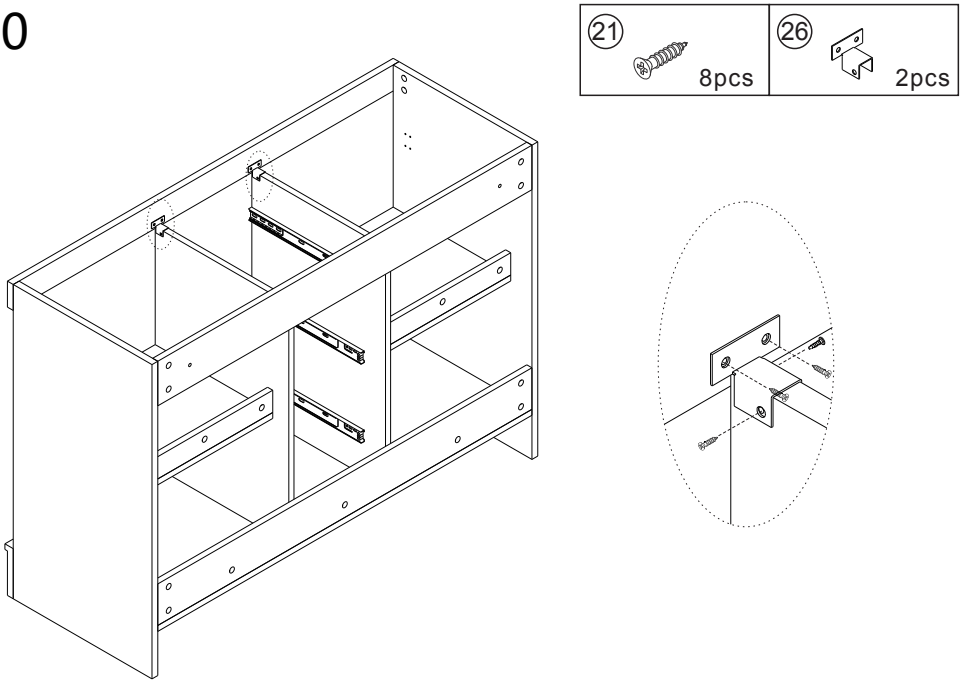

11

21 8pcs	23 4pcs	24 2pcs	24 2pcs

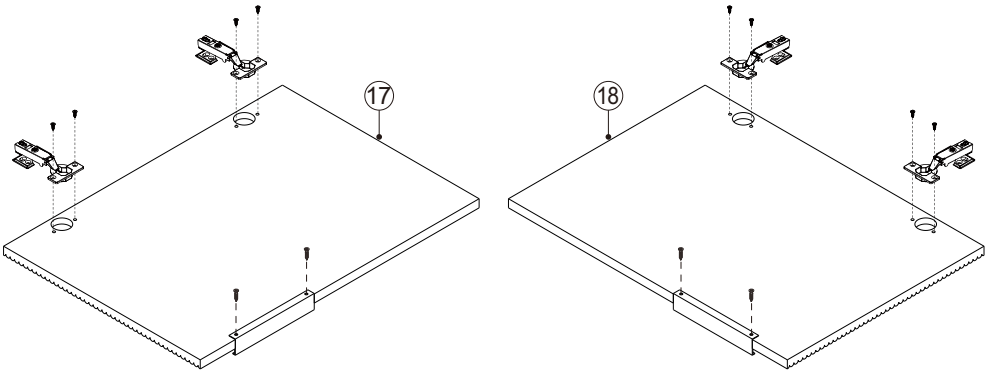

Note: see step 11 to adjust the door's position.
Use 24 Screws to install the handle and apply 21 Screws to fix the hinge on the shelf #17. Then use 21 Screws to connect the hinge bracket to the cabinet.Repeat these steps for the other door.

12

21 16pcs

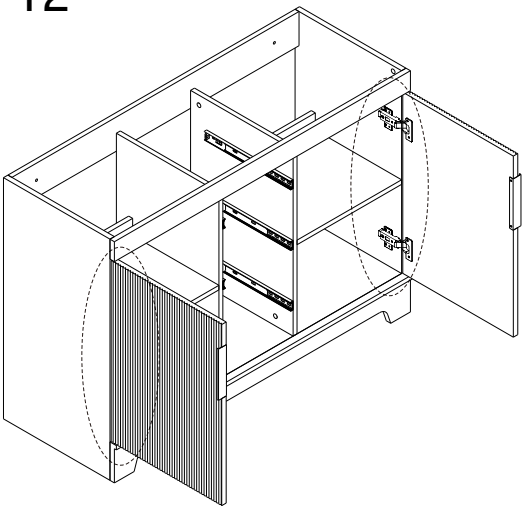

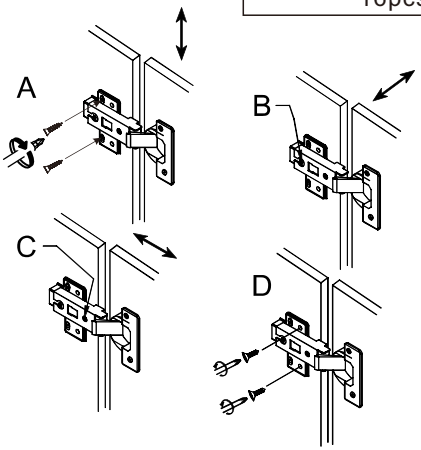

A.Height adjustment C.Side to side adjustment
B.Depth adjustment D.After adjustment A/B/C,tighten screws.

- To ensure proper cabinet alignment, refer to the above illustrations for instructions about adjusting the cabinet height, depth and lateral movement.

13

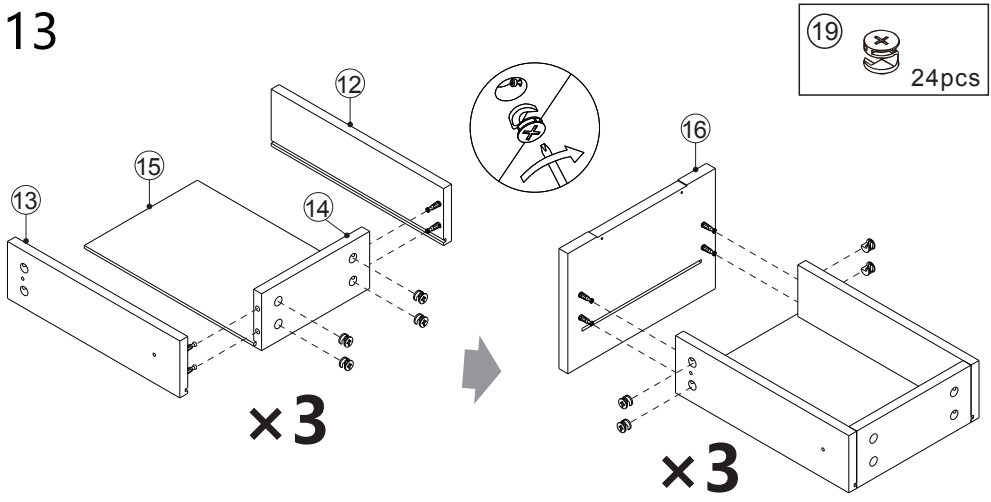

- Refer to the illustration,Connect the side plate #12 #13 with the back plate #14 with screws.Then insert the plate #15 in to the finished shelf.
- Refer to the illustration,Connect the side plate #16 is inserted into the prepared plate, Then tighten the cam lock with the cover.

14

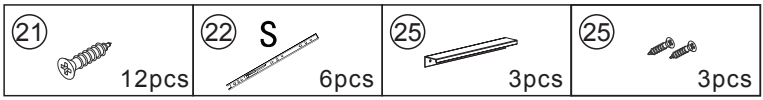

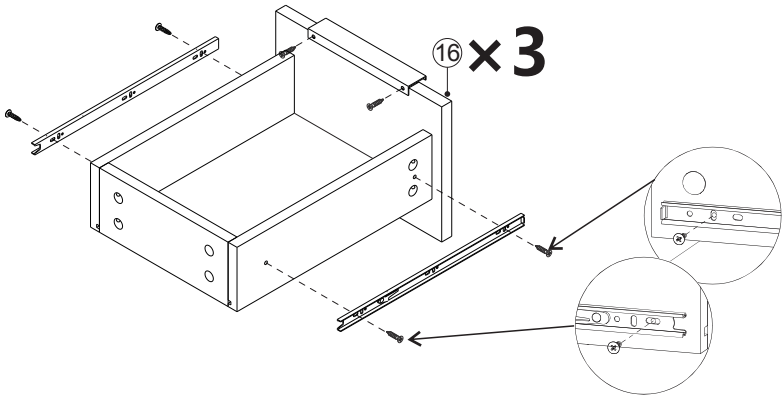

- Refer to the illustration, Apply Screws to fix the slides on the boards #12, #13. Use 25 Screws to install the handle.

15

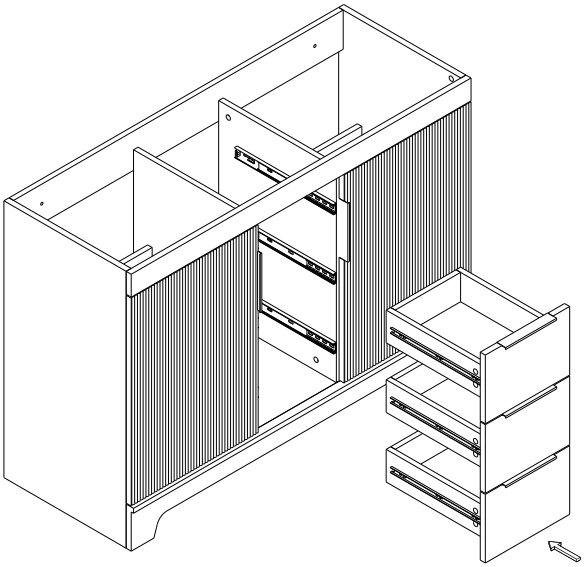

- If the drawers are not in the same level,please adjust thescrews in the drawer box.
- Assembled drawers are loaded onto cabinets.

16

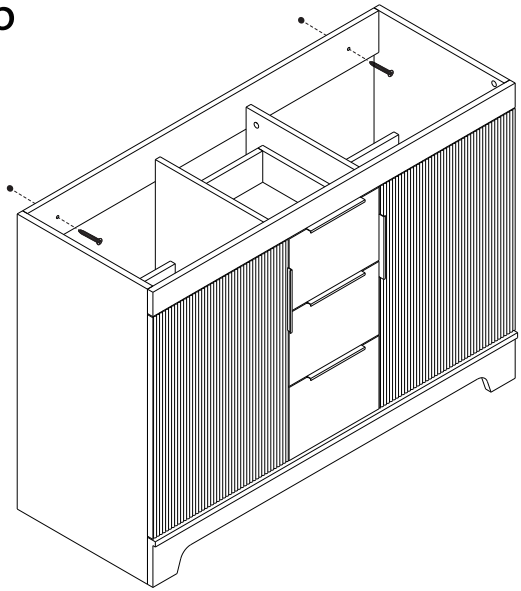

㉗ 2pcs	㉗ 2pcs

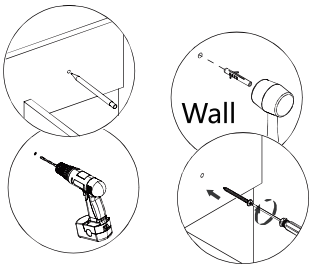

- Refer to the illustration,Draw the spacing betweenthe walls on the cabinet, punch holes in the wall,and fix the cabinet to the wall with screws

14

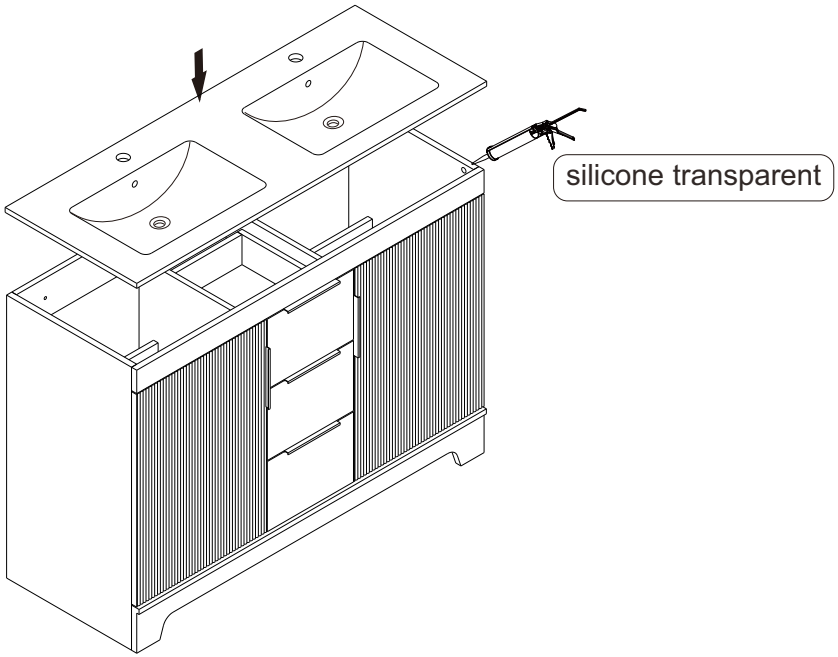

THANK YOU

Thank you for choosing our product. We sincerely hope that the assembly process has been smooth and enjoyable for you.
If you have any questions or suggestions during the use of the product, please feel free to contact us.

Contact number: (323)-393-8260at EST 9AM-1PM
E-mail: service@eclifeusa.com