Assembling Instruction

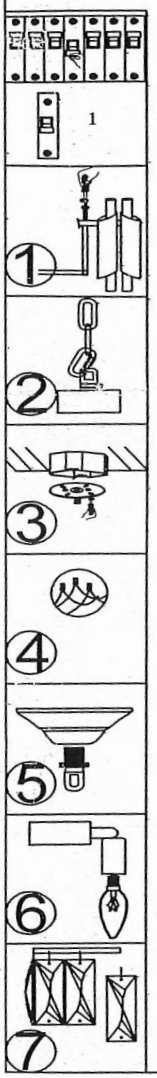

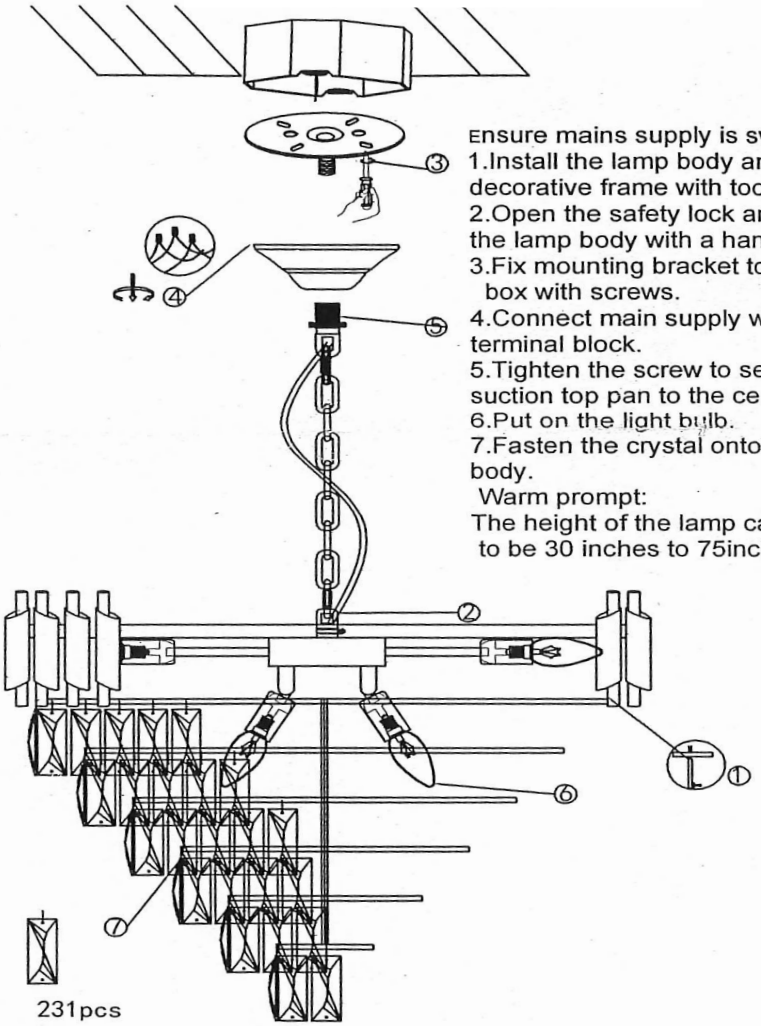

Ensure mains supply is switched off.

1.Install the lamp body and crystal decorative frame with tools.

2.Open the safety lock and connect the lamp body with a hanging chain.

3.Fix mounting bracket to junction box with screws.

4.Connect main supply wires to terminal block.

5.Tighten the screw to secure the suction top pan to the ceiling,

6.Put on the light bulb.

7.Fasten the crystal onto the lamp body.

Warm prompt:

The height of the lamp can be adjusted to be 30 inches to 75inches.