ASSEMBLY INSTRUCTIONS
INSTRUCCIONES DE ENSAMBLE

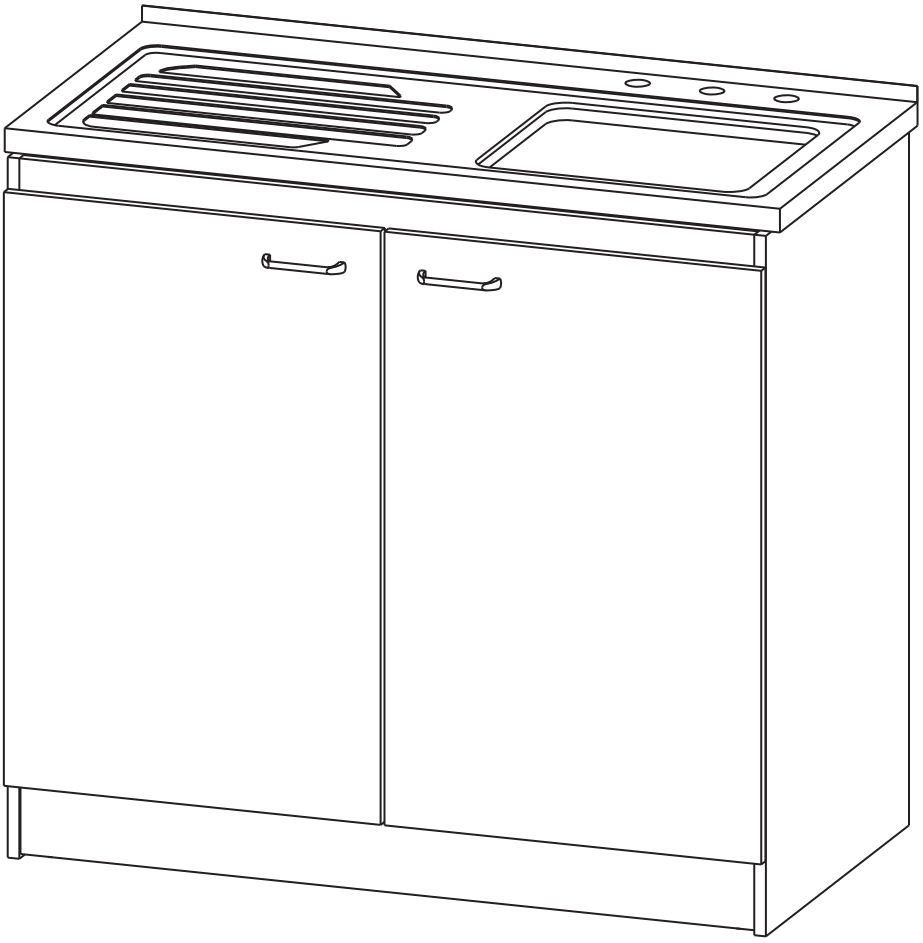

Height: 35,4 in	Alto: 90 cm
Width: 39,3 in	Ancho: 100 cm
Depth: 19,7 in	Fondo: 50 cm

LOT N°

REF./SKU. MIV 4450

IF ANY PARTS ARE BROKEN OR MISSING PLEASE CONTACT US AT: 1-888-391-01-66 / customerservicetuhome@rta.com.co OUR CUSTOMER SERVICE TEAM WILL PROVIDE YOU HELP TO RESOLVE ANY ISSUES IMMEDIATELY

NAPOLES KITCHEN BASE CABINET
Mueble Inferior kit lavaplatos Napoles

IMPORTANT RECOMMENDATIONS

Do not paint the cabinet.

The cabinet MUST be used exclusively indoors, do not expose to direct sun.

Clean metallic hardware with a dry cloth.

Do NOT overload the cabinet (see suggested loads).

Do not hit or hammer the cabinet (just when indicated).

Clean with a slightly damp cloth, use gentle soaps.

Do not drag, lift and move between two people.

Avoid direct contact with water, fire or exposure to heat sources.

WARNING

Never allow children to climb or manipulate the cabinet, furniture tip over can cause serious injuries or death.

RECOMENDACIONES IMPORTANTES

No pintar el mueble.

El mueble debe ser usado únicamente en interiores, no exponer al sol directo.

Limpiar los herrajes metálicos con un paño seco.

NO sobrecargar el mueble (ver las cargas sugeridas).

No golpear ni martillar el mueble (solo cuando se indique).

Limpiar con un paño ligeramente húmedo, usar jabones suaves.

No arrastre el mueble, levántelo entre dos personas.

Evite el contacto directo con el agua, el fuego o la exposición a fuentes de calor.

ADVERTENCIA

Nunca permita que los niños escalen o manipulen el mueble, la caída de este puede provocar lesiones graves o la muerte.

INDEX

Assembly Hardware 4

Assembly Parts 5

Suggested Loads 6

Assembly Recommendations 6

Assembly Steps 7-14

Warranty 15

ÍNDICE

Herrajes para Armado 4

Piezas de Armado 5

Cargas Sugeridas 6

Recomendaciones de Ensamble 6

Pasos de Armado 7-14

Garantía 15

REQUIRED TOOLS*

HERRAMIENTAS NECESARIAS*

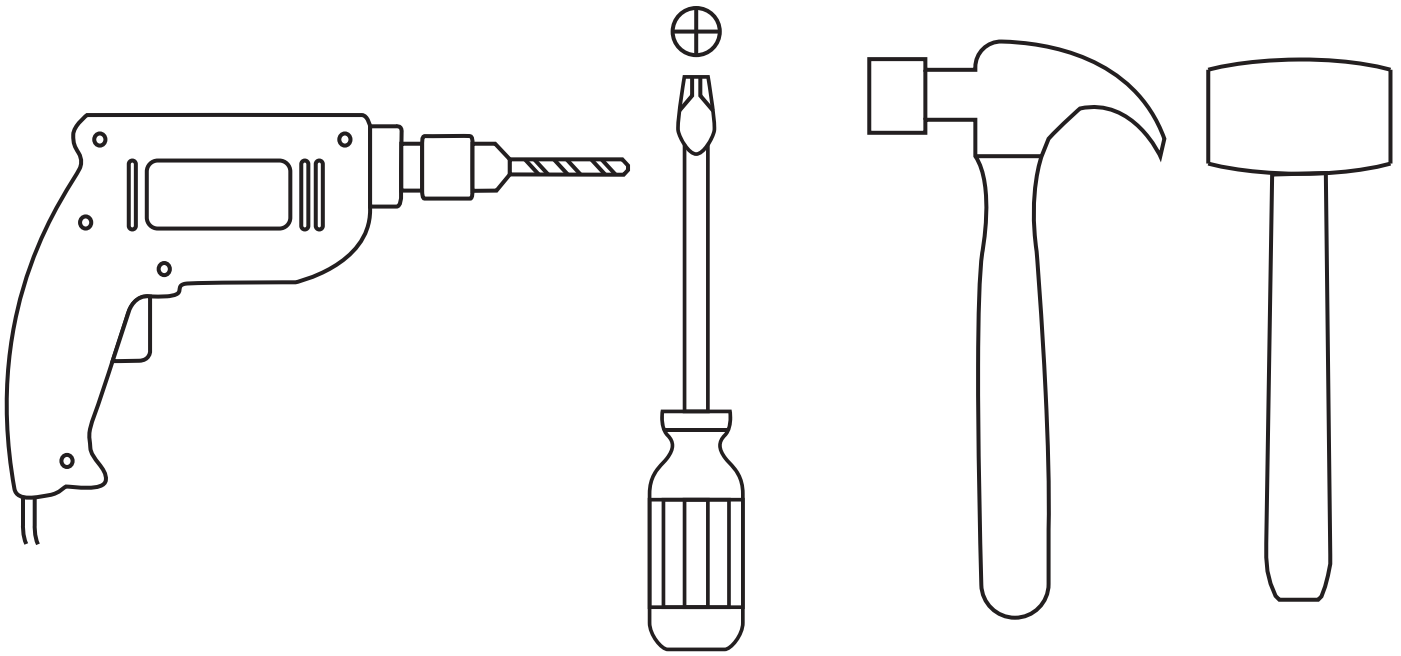

*Not included, and not shown actual size.

*No incluidas y no se muestran en tamaño real.

ASSEMBLY HARDWARE

HERRAJES PARA ARMADO

Please check that the hardware content is correct. If any item is missing, please call to our customer service line.

Compruebe que el contenido de los herrajes sea el correcto. En caso de que falte alguna pieza, por favor llame a nuestra línea de atención al cliente.

x10

Minifix Cams
Minifix

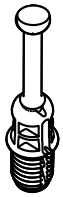

x10

Spreading Bolt
Perno Minifix

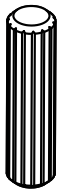

x19

Wood Dowel
Tarugo

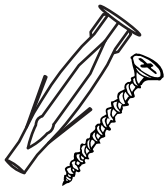

x3

Drywall Screw +
Wall Anchor
Chazo Mariposa
+ Tornillo Ensamble

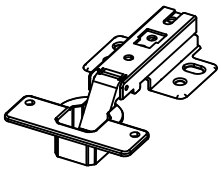

x4

Full Overlay Hinge
Bisagra Parche

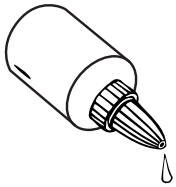

x1

Glue
Pegante

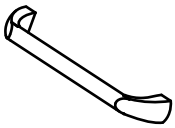

x2

Handle
Manija

x13

Cover Caps
Tapa Adhesiva
Minifix

x20

Flat Head Screw
Tornillo Lámina

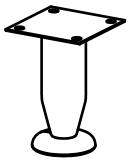

x5

Leg
Pata

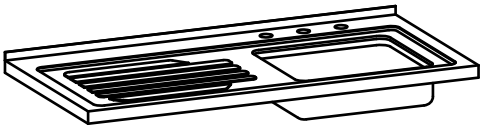

x1

Countertop
Mesón

Hardware items are NOT shown actual size.

Los herrajes no se muestran en el tamaño real.

ASSEMBLY PARTS PIEZAS DE ARMADO

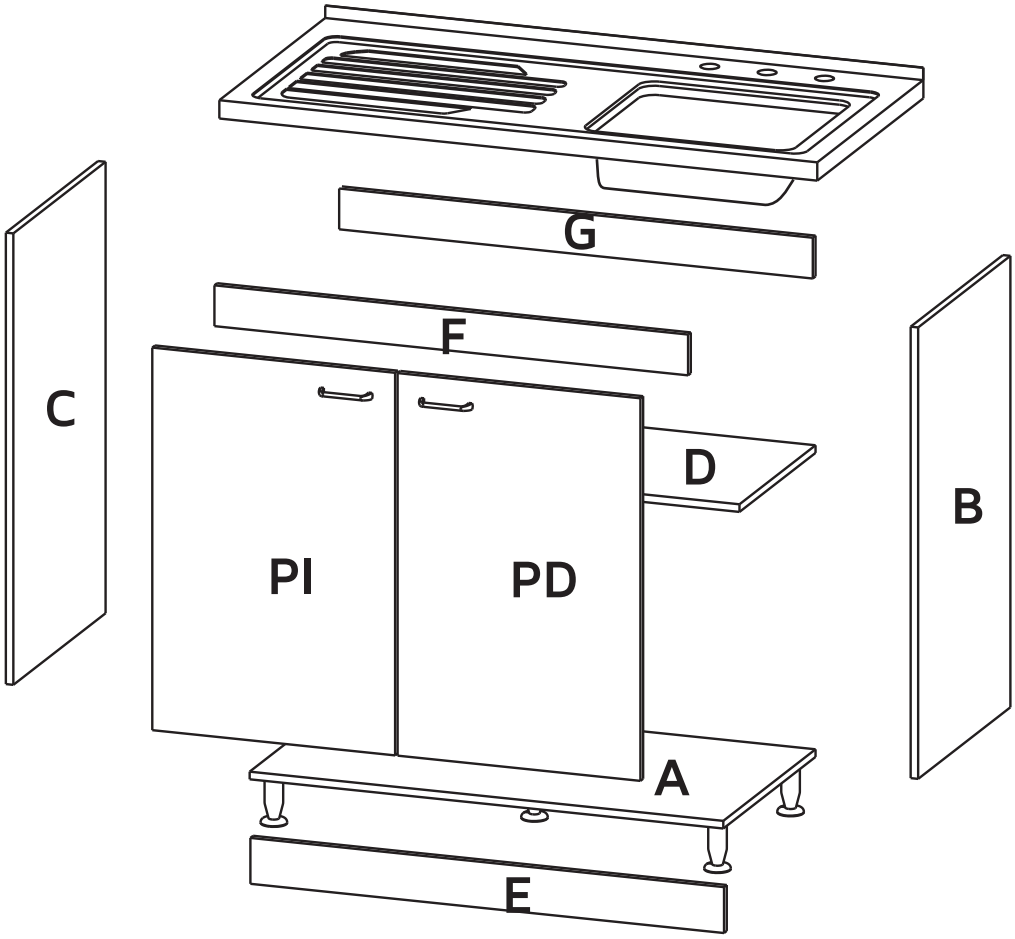

A - x1	**F** - x1
B - x1	**G** - x1
C - x1	**PI** - x1
D - x1	**PD** - x1
E - x1	

MAX SUGGESTED LOADS

CARGAS MÁXIMAS SUGERIDAS

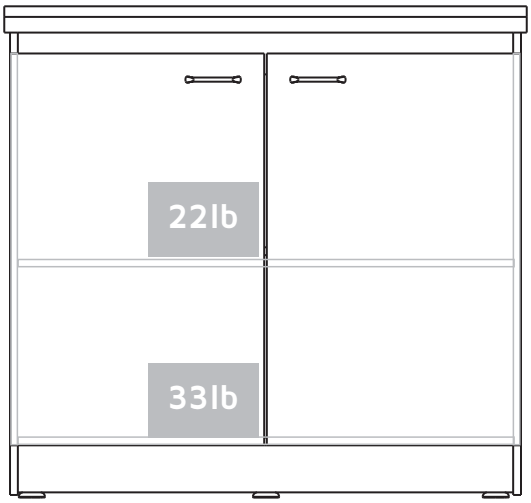

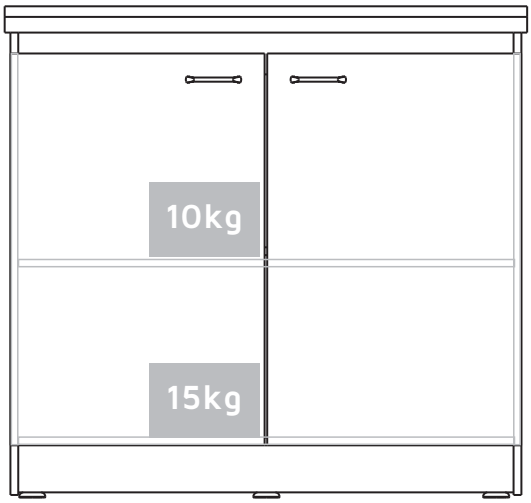

ASSEMBLY RECOMMENDATIONS

Two people are recommended to assemble the product.

Assemble the cabinet on a flat, smooth surface, preferably on a carpeted floor or the carton box of the product.

Carefully read the assembly instructions and identify every wood and hardware part before start assemblying the cabinet.

RECOMENDACIONES DE ENSAMBLE

Ensamble el mueble entre dos personas.

Ensamble el mueble sobre una superficie plana y lisa, preferiblemente sobre un tapete o el cartón de la caja

Lea cuidadosamente las instrucciones e identifique todas las piezas y herrajes antes de empezar a armar el mueble.

1

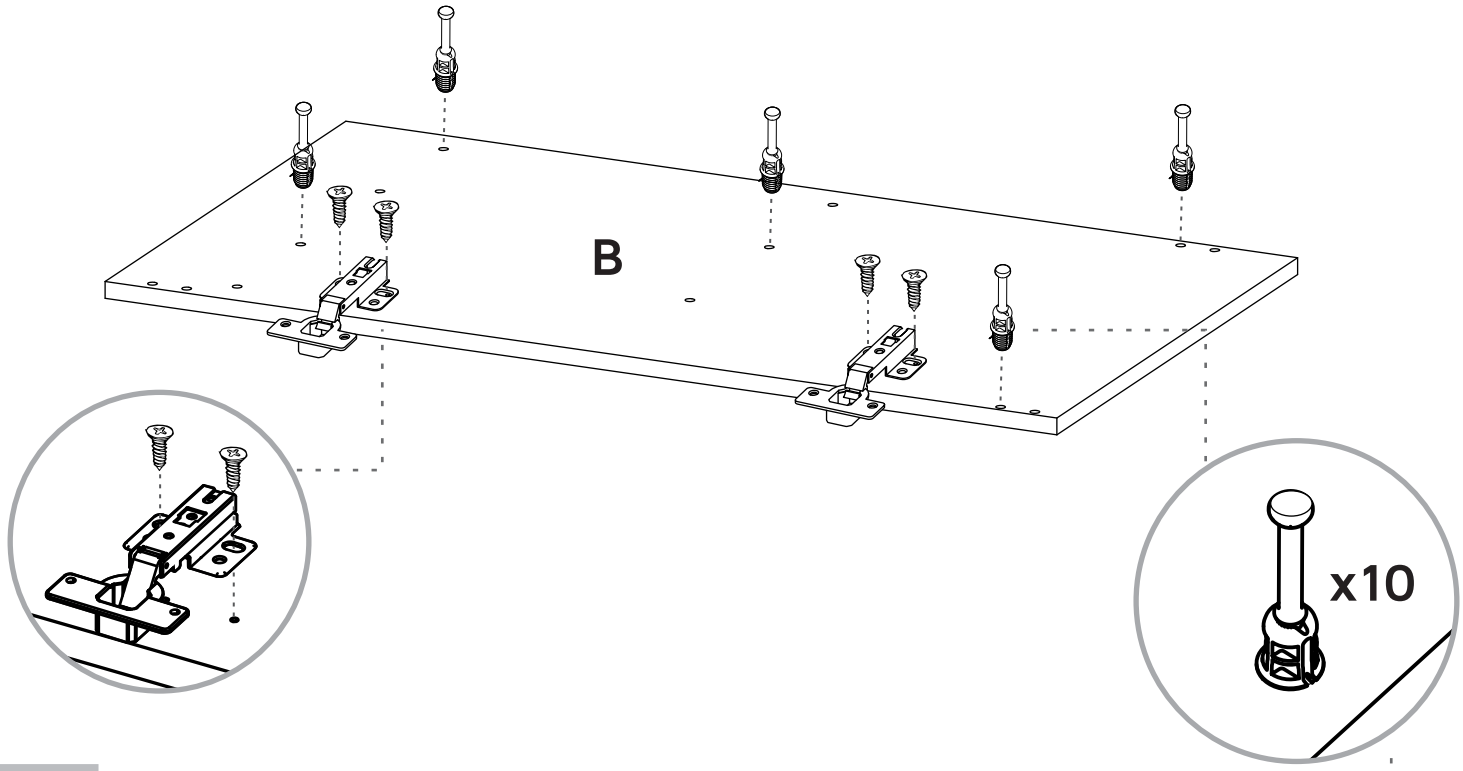

2

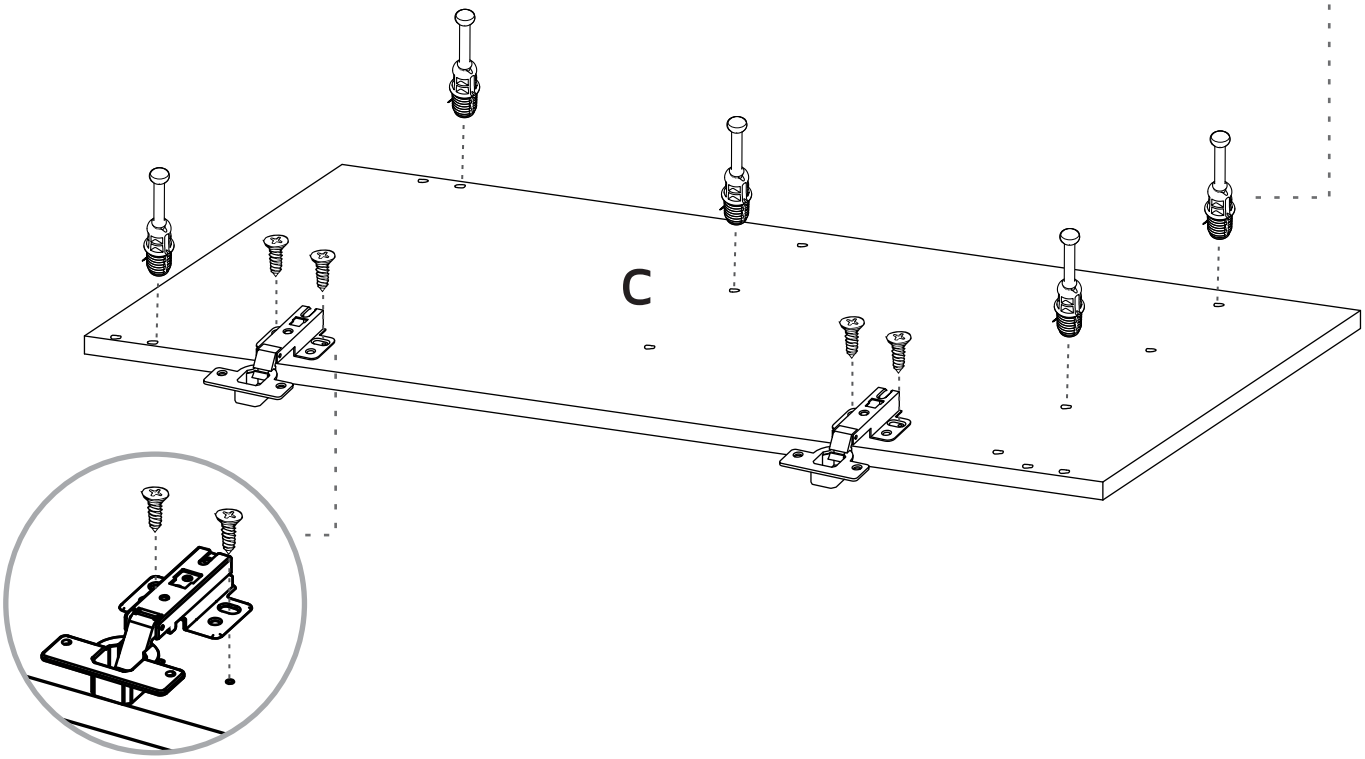

3

Do NOT tighten the cams in this step.
NO apriete las cajas minifix en este paso.

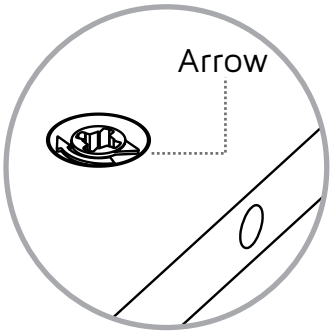

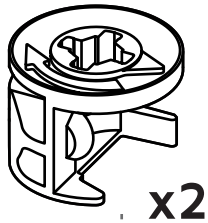

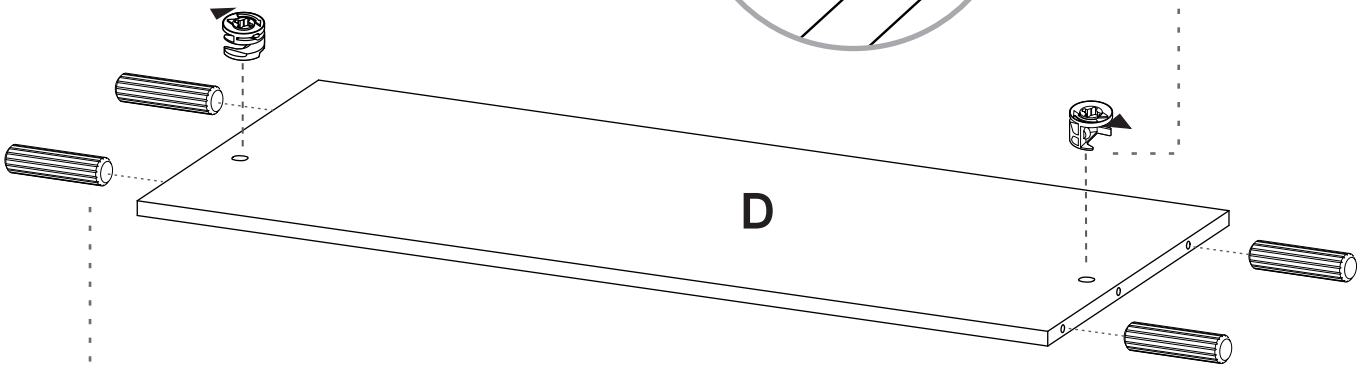

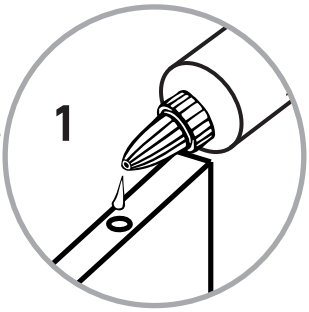

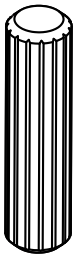

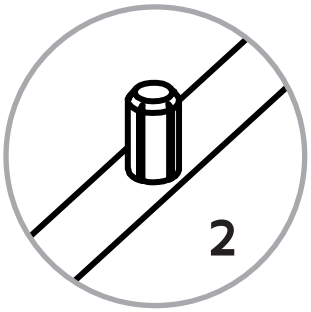

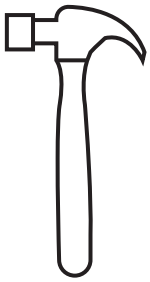

4

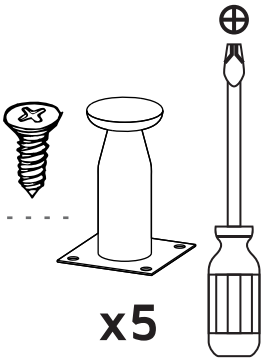

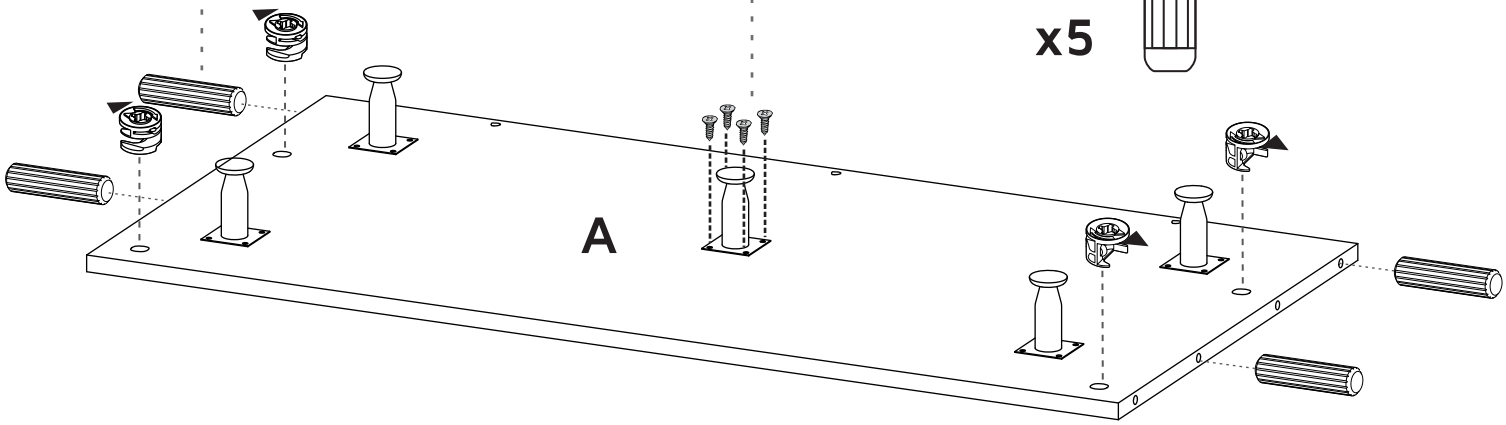

5

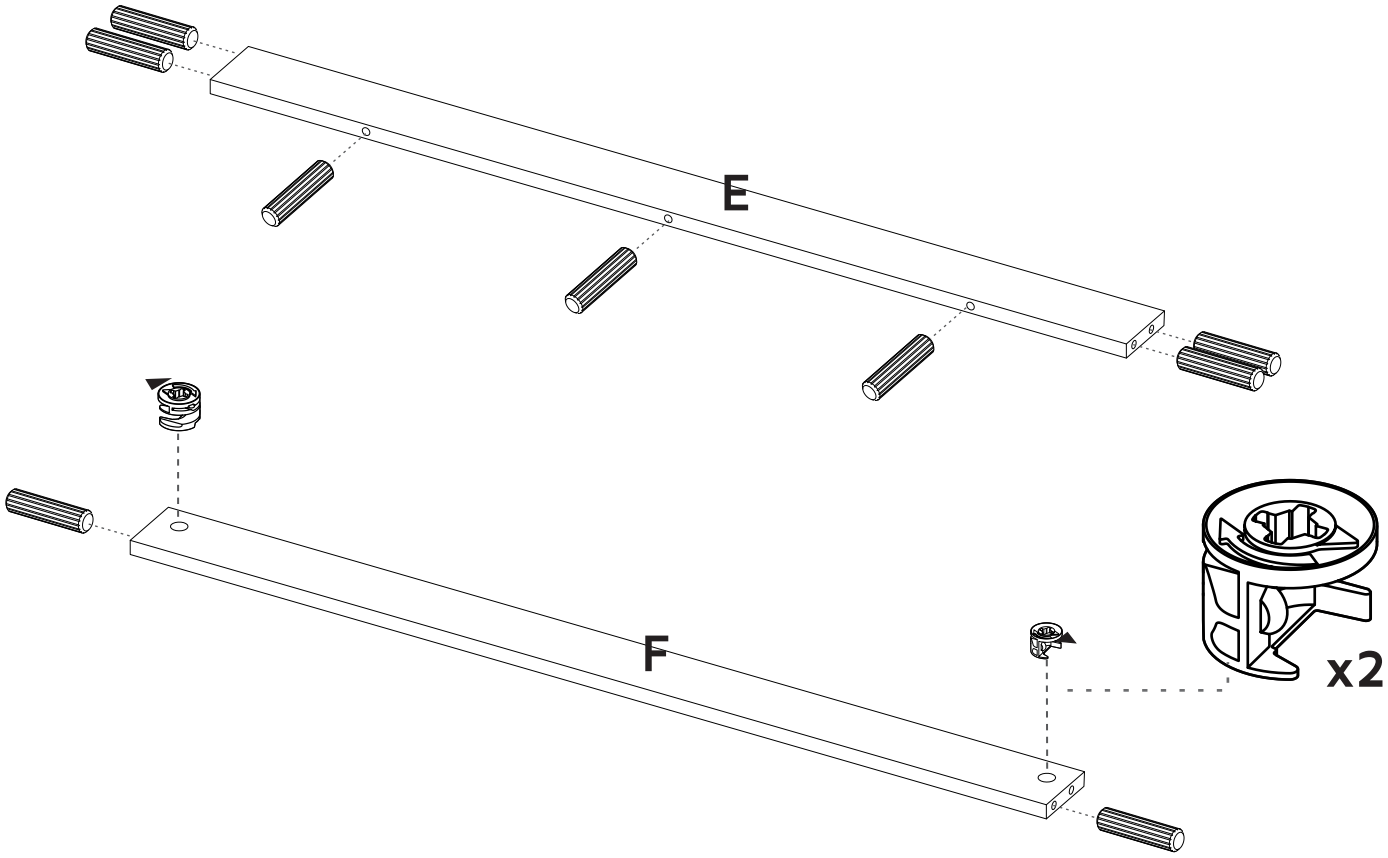

6

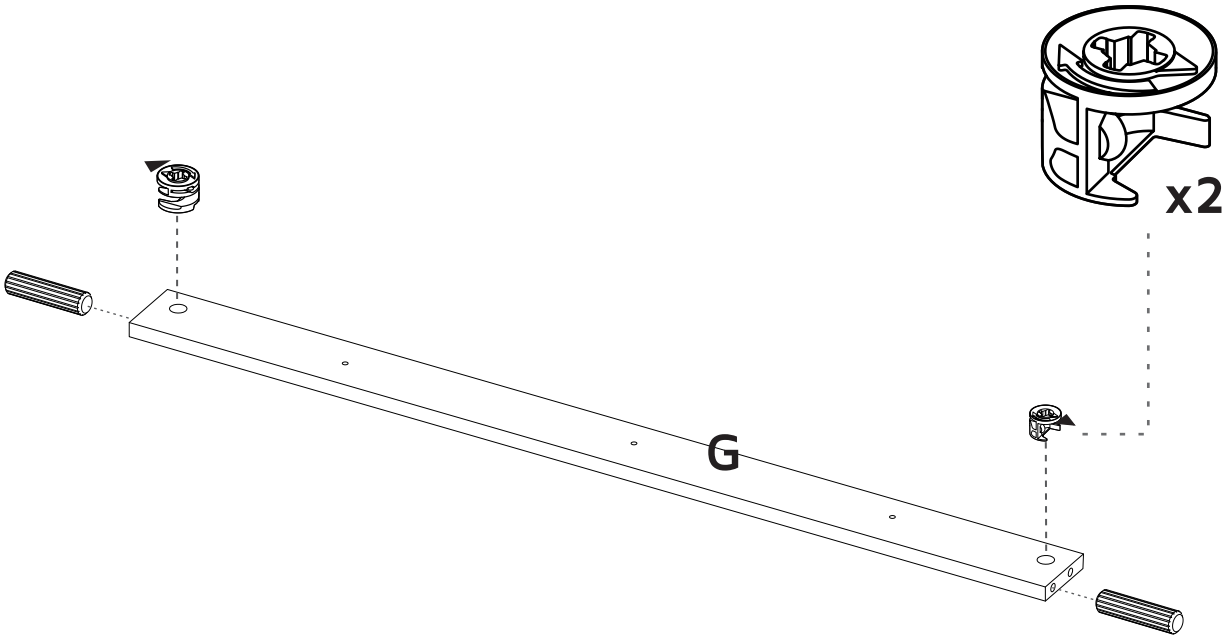

7

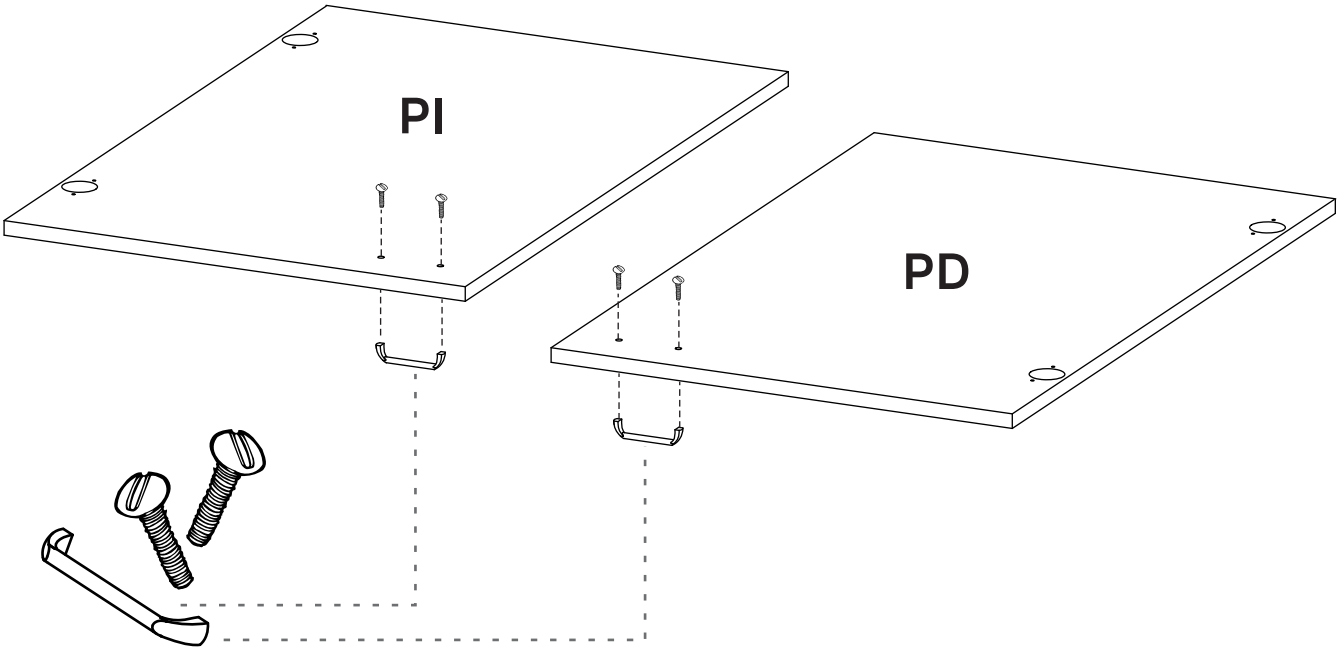

8

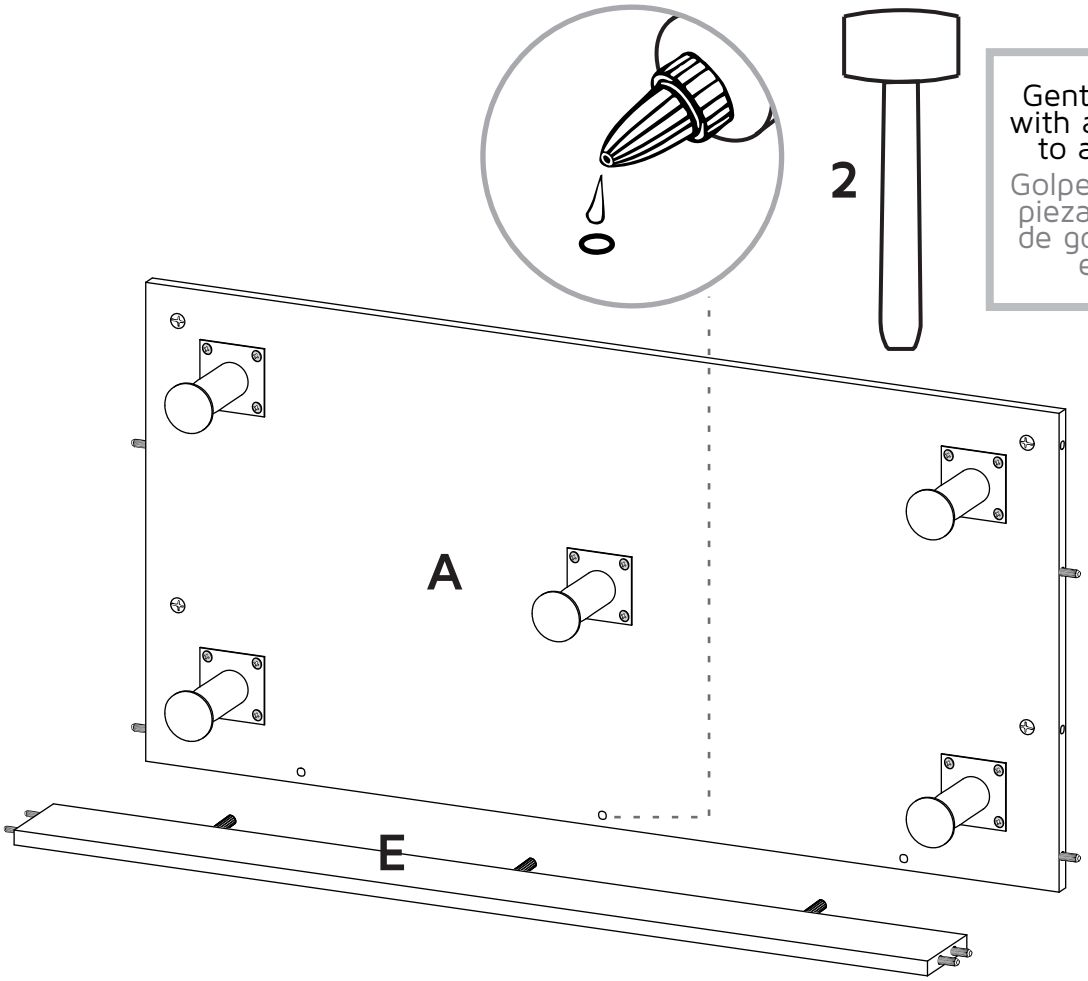

Gently hit the pieces with a rubber hammer to adjust the joint.

Golpee suavemente la pieza con un martillo de goma para ajustar el ensamble.

9

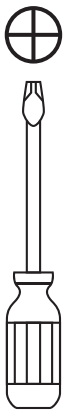

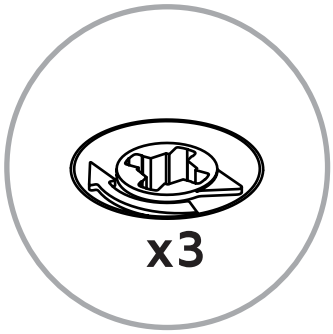

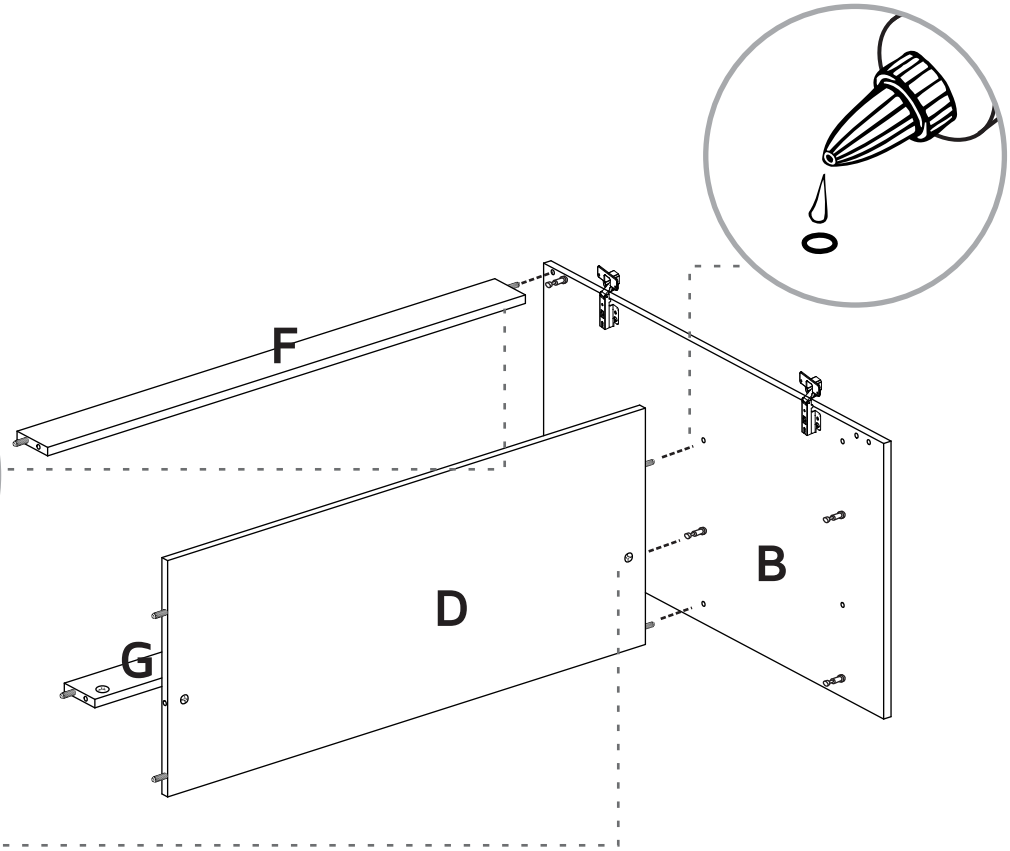

Turn minifix cams to the right to tighten.

Gire las cajas minifix hacia la derecha para apretar las piezas.

10

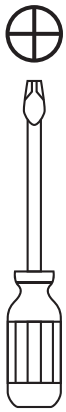

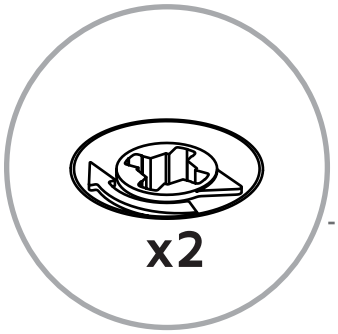

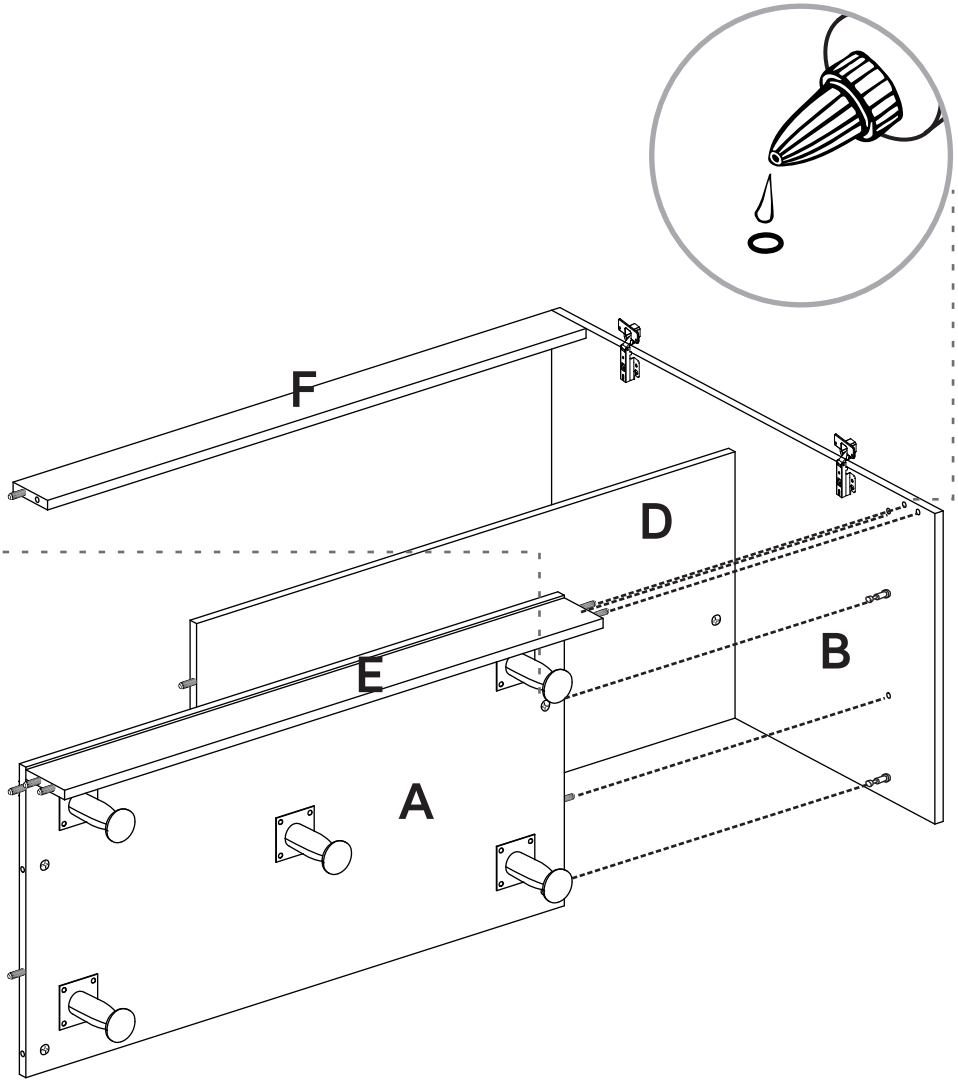

Turn minifix cams to the right to tighten.

Gire las cajas minifix hacia la derecha para apretar las piezas.

11

Be careful turning over the cabinet.
Tenga cuidado al voltear el mueble.

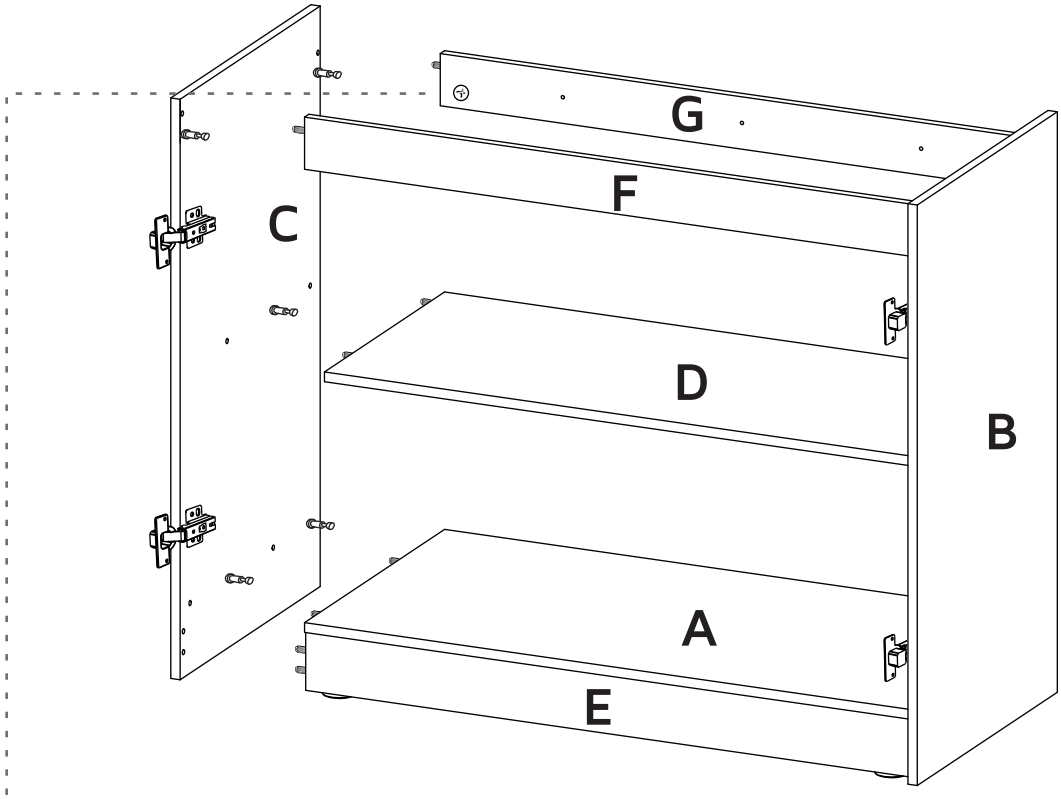

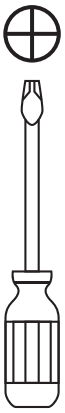

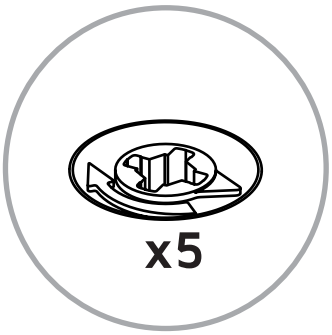

Turn minifix cams to the right to tighten.

Gire las cajas minifix hacia la derecha para apretar las piezas.

13 Door Installation
Instalación de las Puertas

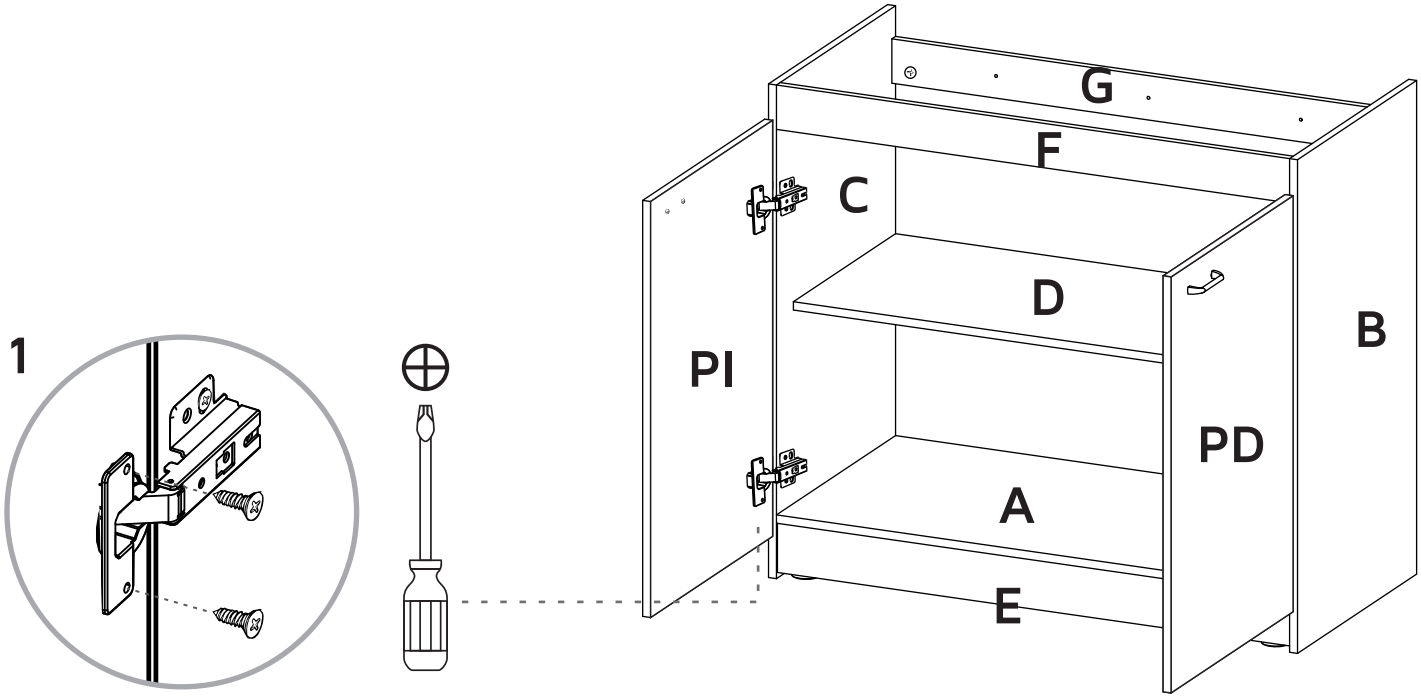

Hinge adjustment
Ajuste de las bisagras

2

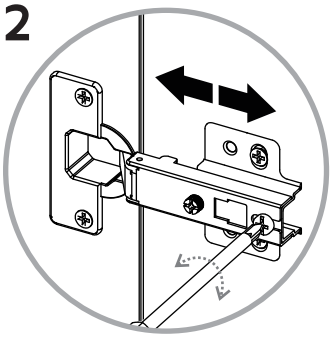

Depht adjustment
Ajuste de profundidad

3

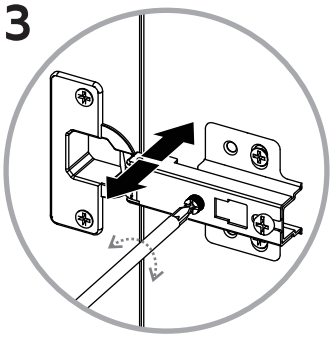

Side adjustment
Ajuste lateral

4

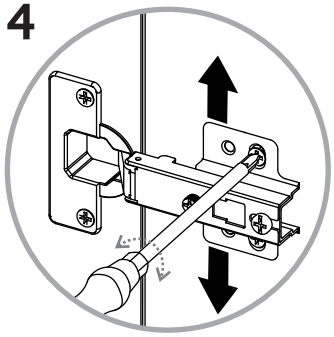

Height adjustment
Ajuste de altura

5

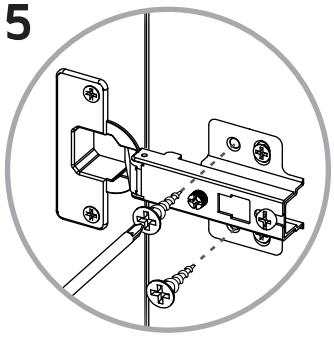

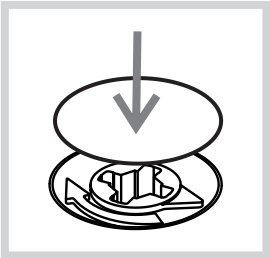

After you finish the adjustment of the cams, cover them with the cover caps.

Después de ajustar todas las cajas minifix, cúbralas con las tapas adhesivas.

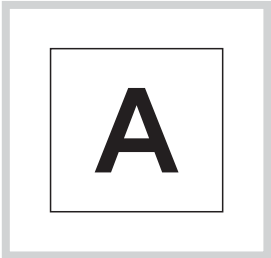

After you finish assembling the cabinet, take off the adhesive letters.

Al terminar de armar, desprenda las letras adhesivas.

15

Wall Installation
Instalación a pared

1.Apply a thick cord of silicone through the borders of the cabinet and at the union with the wall (Silicone not included)

1. Aplicar un cordón grueso de silicona en todos los bordes del mesón y luego en la unión del mesón con la pared para sellar y brindar protección (SILICONA NO INCLUIDA).

2.Place the contertop over the cabinet.

2. Descargar el mesón sobre el mueble.

Tool Not included
Herramienta No incluida

-Drill / Taladro
-Wall Drill / Broca de muro de 5/16"

SCREW /
TORNILLO

G

11,33" 28,8 cm
11,33" 28,8 cm

G

DISTANCES PERFORACIONES WALL
DISTANCIAS PERFORACIONES PARED

C
G
PI
PD
B
E

31.5"
80 cm

Wall / Pared

Floor / Piso

WARRANTY POLICY
PÓLIZA DE GARANTÍA

Furniture has a 3 year warranty coverage in wooden parts and 1 year warranty coverage in hardware pieces since its manufacturing date, which you can see in the lot number printed on the product box and the assembly instructions leaflet.

Warranty covers materials and workmanship imperfections which impair the assembly or correct functioning of the cabinet.

This warranty is not valid if the defects or imperfections are caused by the incorrect following of the assembly instructions, warnings and recommendations, misuse, intentional damage, fire or flood, or after modifications or any kind of alteration, or repaired by someone not authorized by Furniture, when it´s been assembled 3 months after the date of purchase. These defects MUST be reported before the warranty coverage period ends. Once the product has been assembled, the company will not be responsible for defective and/or damaged parts.

This warranty is ONLY valid for the ORIGINAL PURCHASER, it doesn't apply if the product has been resold, rented, etc.

Furniture will take no liability for incidental or consequential damages caused to or by the product (This may not apply in your state).

To make this warranty valid you must write to our customer service email describing the product defect, lot number and submitting your sales reciept or proof of purchase, or contact us at our customer service line. Replaced parts will be under the product´s original warranty coverage period. Damaged parts will become property of the company.

There are no other warranties applicable to this product.

IF ANY PARTS ARE BROKEN OR MISSING PLEASE
CONTACT US AT: 1-888-391-01-66 /
customerservicetuhome@rta.com.co
OUR CUSTOMER SERVICE TEAM WILL PROVIDE
YOU HELP TO RESOLVE ANY ISSUES IMMEDIATELY