Cabinet

Assembly Instruction – Please keep properly for future reference.

If you find any missing boxes, damaged parts, or accessory shortages, please contact the customer service team of your purchasing channel immediately. We will resolve the issue as quickly as possible.

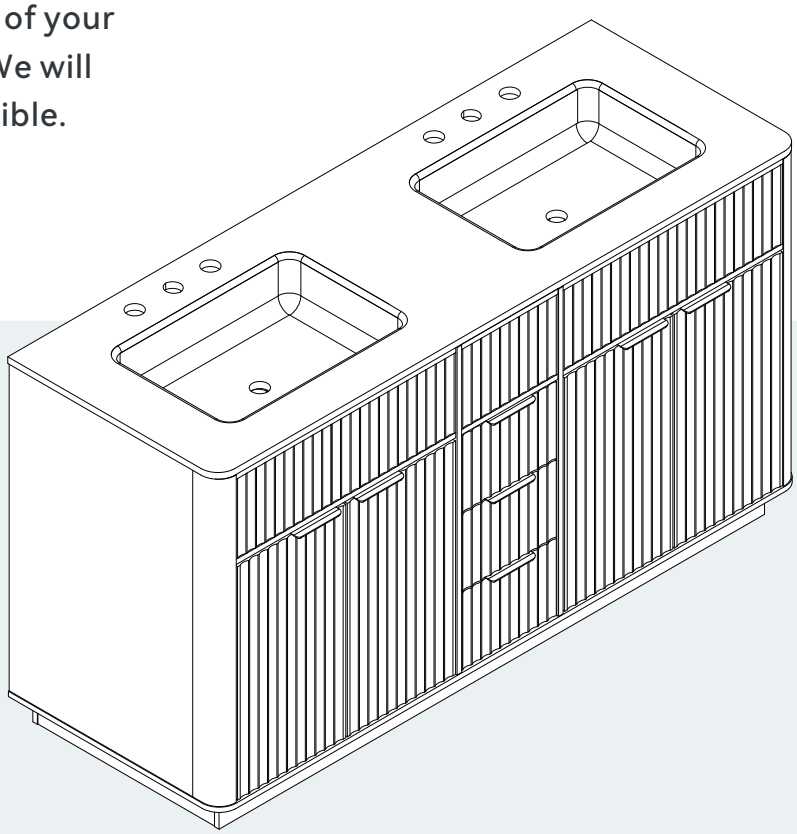

CONTACT US

- In order to receive assistance more quickly, please provide

THE FOLLOWING INFORMATION:

- Order number
- Purchase platform
- Purchase date
- Detailed description of the issue along with photos (if applicable)

Important – Please read these instructions carefully before starting the installation.

EN

EN

Before Assembly

Thank you for choosing our product!
To ensure a smooth installation process, please read this guide carefully to familiarize yourself with the required tools, materials, and installation steps.
Follow the relevant sections to avoid any damage caused by improper installation, and make sure to review all operation and safety guidelines for correct installation procedures.

Packaging Notice:

If you find any missing boxes, damaged parts, or accessory shortages, please contact the customer service team of your purchasing channel immediately. We will resolve the issue as quickly as possible.

Safety and Care Advice

Important :
Please read these instructions fully before starting assembly.

- Check you have all the components and tools listed on the following pages.
- Remove all fittings from the plastic bags and separate them into their groups.
- Keep children and animals away from the work area, small parts could choke if swallowed.
- Make sure you have enough space to layout the parts before starting.
- During assembly do not stand or put weight on the product, this could cause damage.
- Assemble the item as close to its final position (in the same room) as possible.
- Assemble on a soft level surface to avoid damaging the unit or your floor.
- Parts of the assembly will be easier with 2 people.



- To reduce the likelihood of damaging your product please ensure that your power drill is set on a low torque setting.

Care and Maintenance

- Only clean using a damp cloth and mild detergent, do not use bleach or abrasive cleaners.
- From time to time check that there are no loose screws on this unit.
- This product should not be discarded with household waste. Take to your local authority waste disposal center.

Handy Hints

- Assemble all parts and bolts loosely during assembly, only once the product is complete should you fully tighten the bolts.
- Regularly check and ensure that all bolts and fittings are tightened properly.

Warning

In order to help prevent overturning, please follow these instructions.

- Use the anti tip strap or wall fixing method provided (if applicable).
- Do not allow children to climb or hang on the furniture.
- Do not open more than one drawer at a time.
- Do not place heavy items in the top drawers.
- Do not place heavy items on top of the furniture, unless the furniture has been designed for this purpose.
- Please note that only the anti tip strap is provided. You will need to provide wall plugs and screws applicable for your wall type.

EN

Customer Service Guide

Thank you for choosing our product! We are committed to providing you with excellent service. If you find any missing parts, damaged packaging, or product damage after receiving all packages, please follow the steps below to quickly contact our customer service team. We will do our best to resolve your issue.

1. Missing Parts

Verify Parts:

1. Refer to the “Parts List” in the manual to verify the name, specifications, and quantity of the missing parts.
2. Take a clear photo of the parts list and mark the missing parts with detailed information, e.g., “Missing 5 pieces of M6×30mm screws.”

Contact Us:

By Email:

Send an email with the subject line “Missing Parts Issue.” Include the following in the email:

- A description of the missing parts and a photo of the parts list.
- Order details (order number, purchase platform, purchase date).

2. Product or Packaging Damage

If it affects normal use:

Steps:

1. Take clear photos or videos showing the damaged parts and the extent of the damage (multi-angle shots are recommended).
2. Email the photos/videos along with order details with the subject line “Product Damage Issue.”

Resolution:

After verification, we will arrange for a replacement part, product exchange, or refund as quickly as possible.

Resolution:
After verification, we will arrange for a replacement part, product exchange, or refund as quickly as possible.

If it does not affect normal use:

Steps:
1. Contact our customer service team.
2. Provide a description of the damage and include relevant photos or videos.

Resolution:
We will provide repair guidance or an appropriate compensation plan based on the specific situation.

Contact Us:

Customer Service Email

Helpful Tips

To process your issue efficiently, please prepare the following information:

- Order details (order number, purchase platform, purchase date).
- Clear photos or videos.
- We are committed to providing quick and professional solutions, no matter the size of the issue, to ensure your satisfaction.

Thank you for your trust and support!
We hope you enjoy using our product!

EN

Parts List - Panels

Please check you have all the panels listed below.

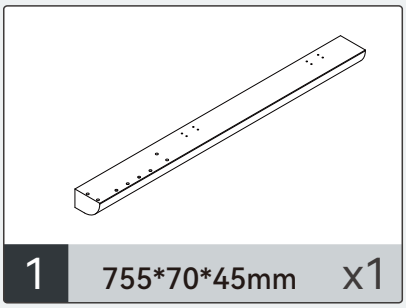

1 755*70*45mm x1

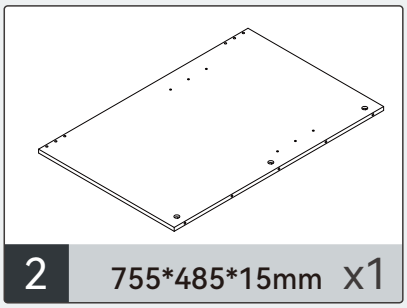

2 755*485*15mm x1

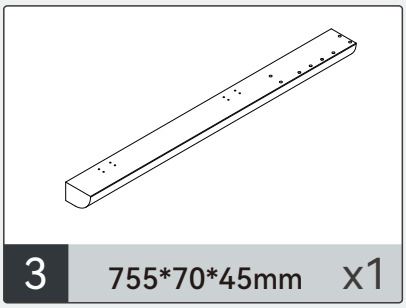

3 755*70*45mm x1

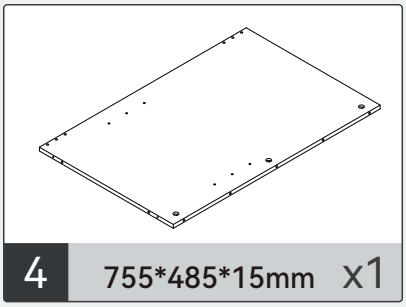

4 755*485*15mm x1

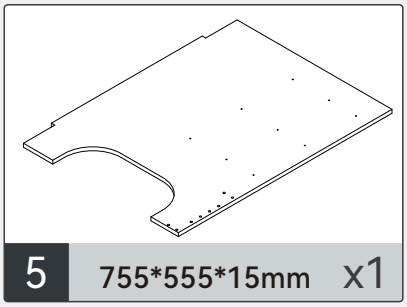

5 755*555*15mm x1

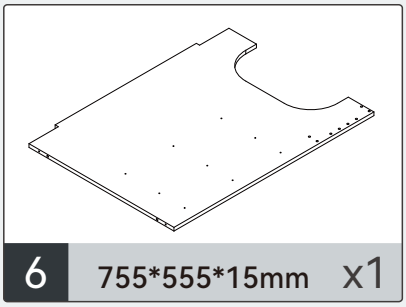

6 755*555*15mm x1

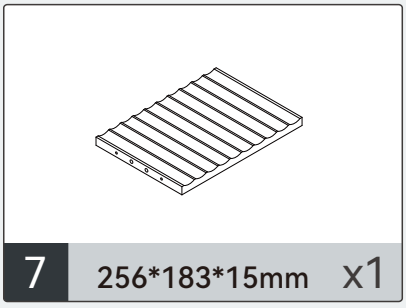

7 256*183*15mm x1

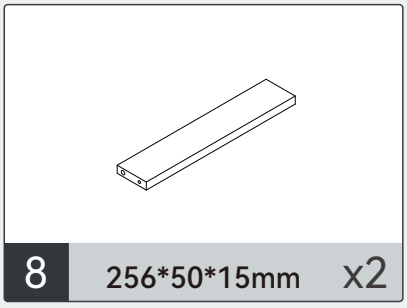

8 256*50*15mm x2

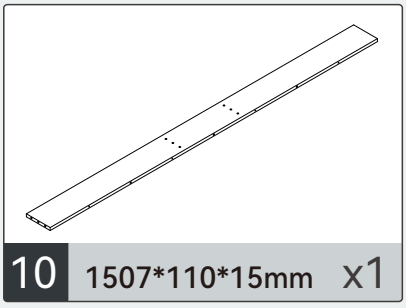

10 1507*110*15mm x1

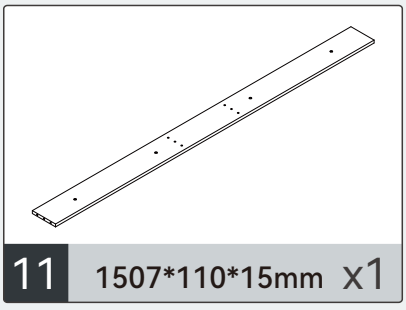

11 1507*110*15mm x1

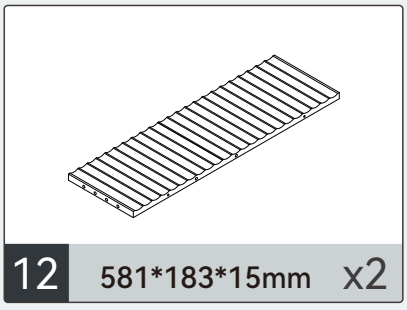

12 581*183*15mm x2

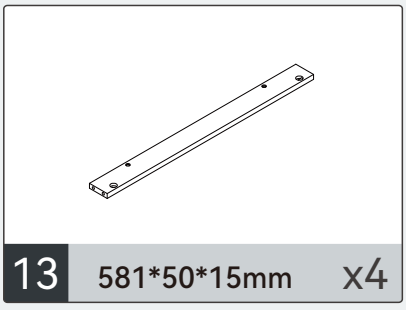

13 581*50*15mm x4

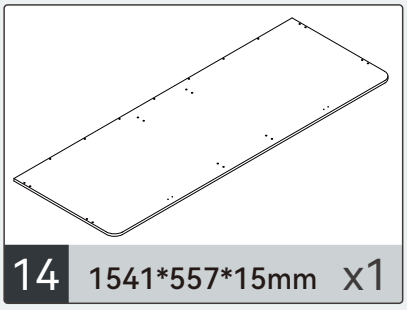

14 1541*557*15mm x1

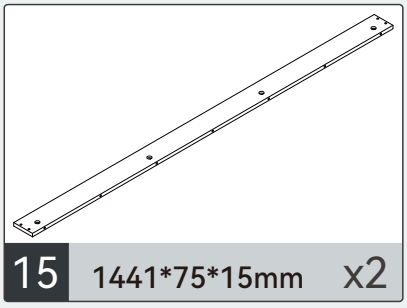

15 1441*75*15mm x2

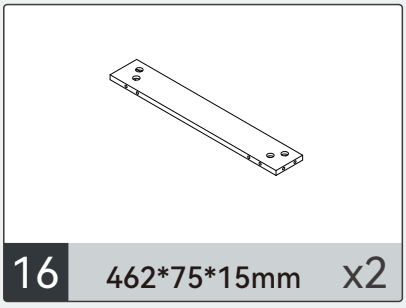

16 462*75*15mm x2

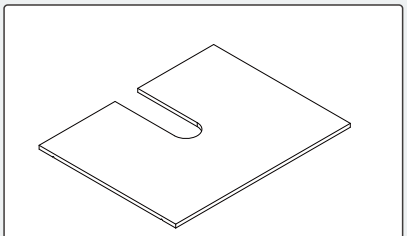

17 609*480*12mm x2

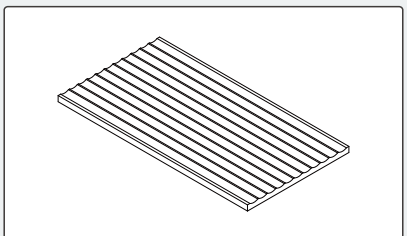

18 534*286*15mm x2

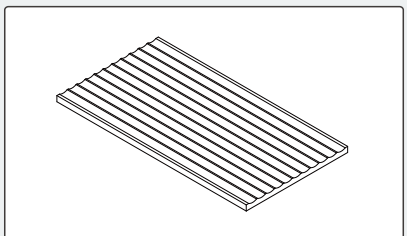

19 534*286*15mm x2

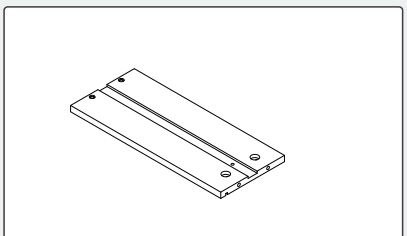

20 330*140*12mm x3

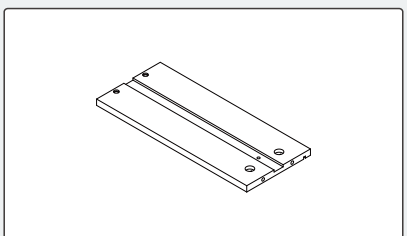

21 330*140*12mm x3

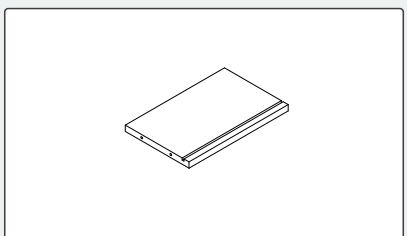

22 218*140*12mm x3

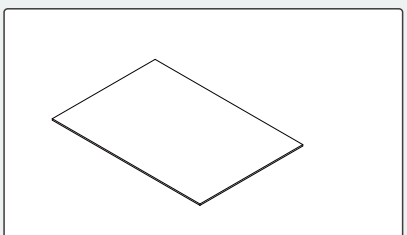

23 325*226*2.7mm x3

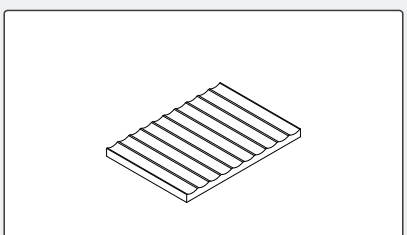

24 250*175*15mm x3

EN

Parts List - Fittings

Please check you have all the fittings listed below.

Note: The quantities below are the correct amount to complete the assembly. In some cases more fittings may be supplied are required.

								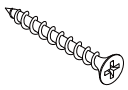
A	Ø7x37mm x50	B	Ø15x9.6mm x58	C	Ø6x30mm x49	D	Ø3.5x12mm x70	E	Ø5x40mm x40
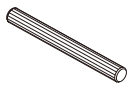		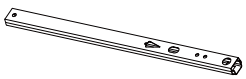		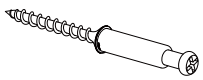				
F	Ø6x50mm x8	G	Drawer Slide x6	H	Ø7x68mm x8	I	Protective Foot x6		
		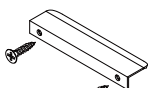		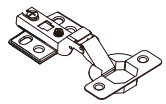				
J	Door Stopper x2	K	Handle & Fixings x7	L	Hinge x8	M	Shelf Support Pin x8		
								
N	4*12mm Screw x6	O	Wall Fixing Pack x4					

Tools required	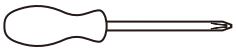 Phillips screwdriver (medium & large)
Ruler Use this ruler to help correctly identify the screws	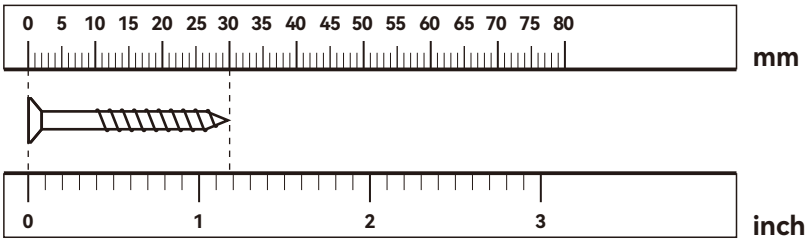 **The screws length is measured from the head to the point (30mm screw shown).**

Using Camlocks

Step 1

Connect the male camlock as directed in the assembly instructions using a screwdriver.

DO NOT OVER TIGHTEN.

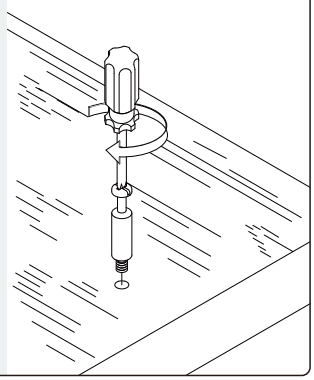

Step 2

Push the male camlock into the entry hole.

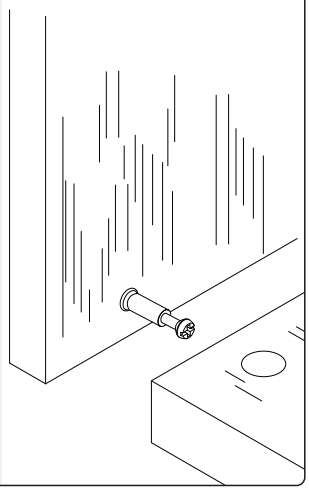

Step 3

Insert the female camlock as shown in the instructions.

Note: ensure that the arrow on the top of the camlock points towards the entry hole for the male camlock.

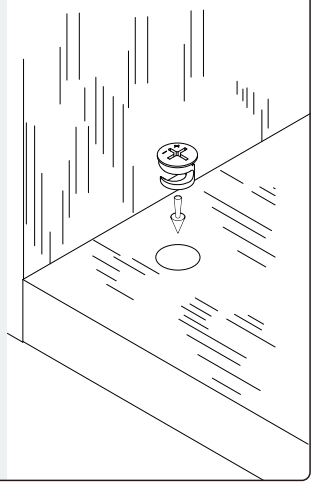

Step 4

Turn the female camlock clockwise with a screwdriver.

You should feel a click when the camlock is locked in place.

The joint is now secure.

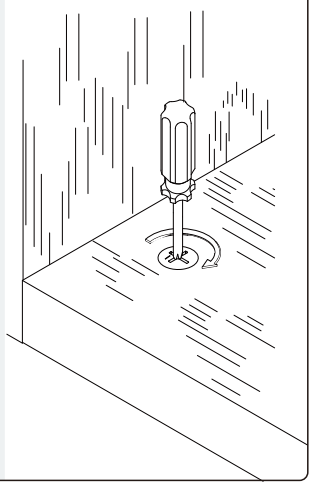

Assembly Instructions

EN

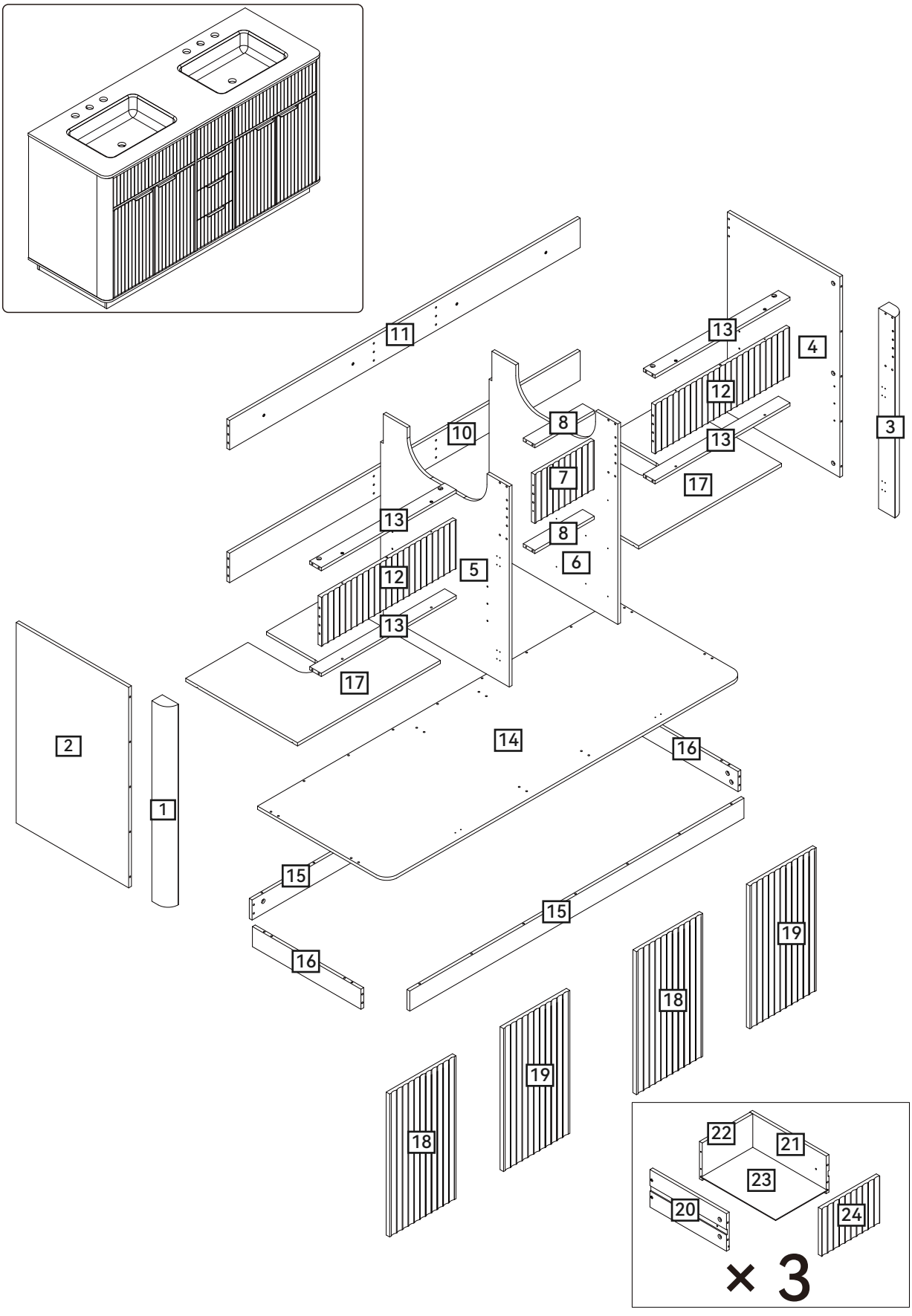

Step 1

D	G
Ø3.5x12mm x18	Drawer Slide x6

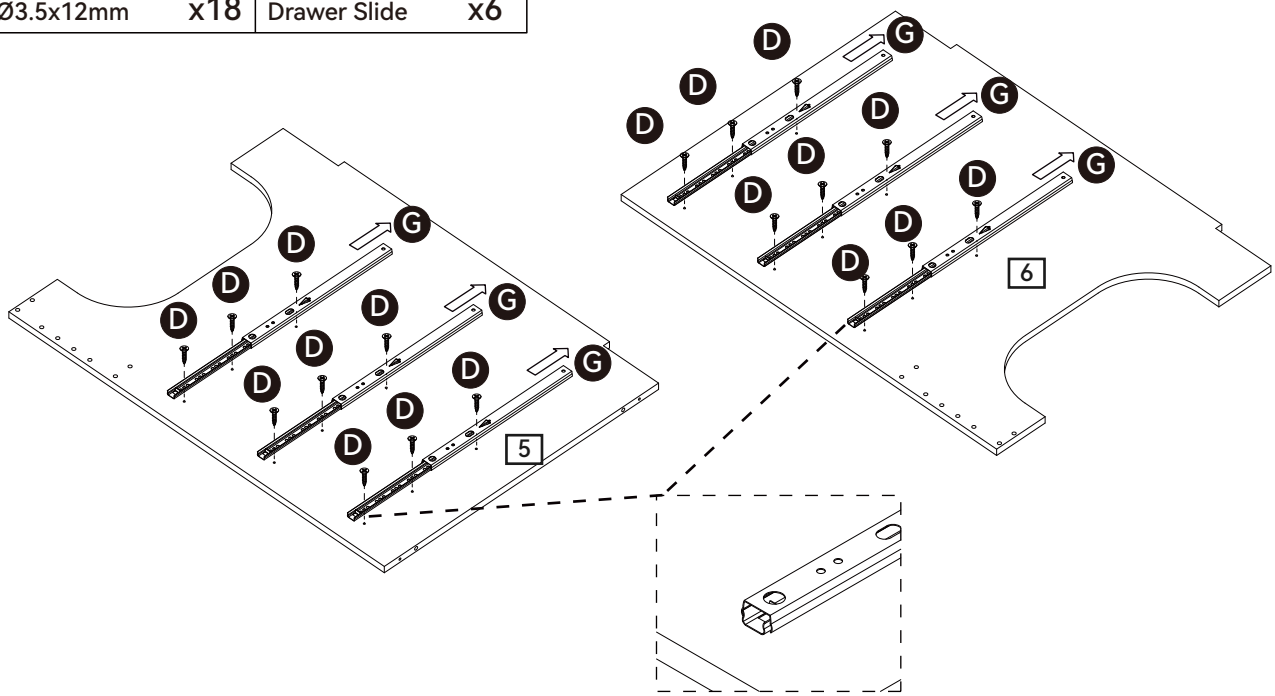

⚠ Note: Please pay attention to the direction of the drawer slides.

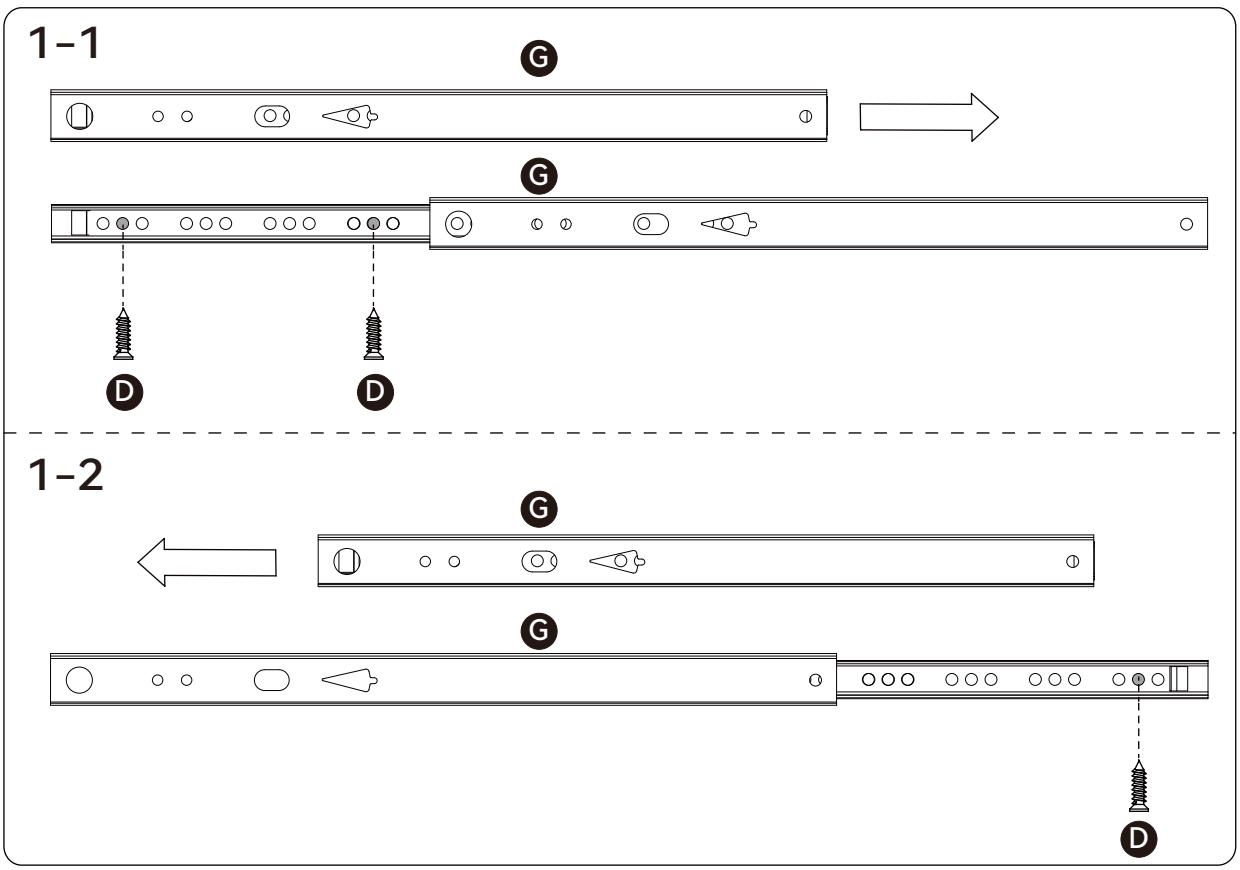

Attach drawer slide (G) to part (5, 6) using screw (D) and a screwdriver.

Step 2

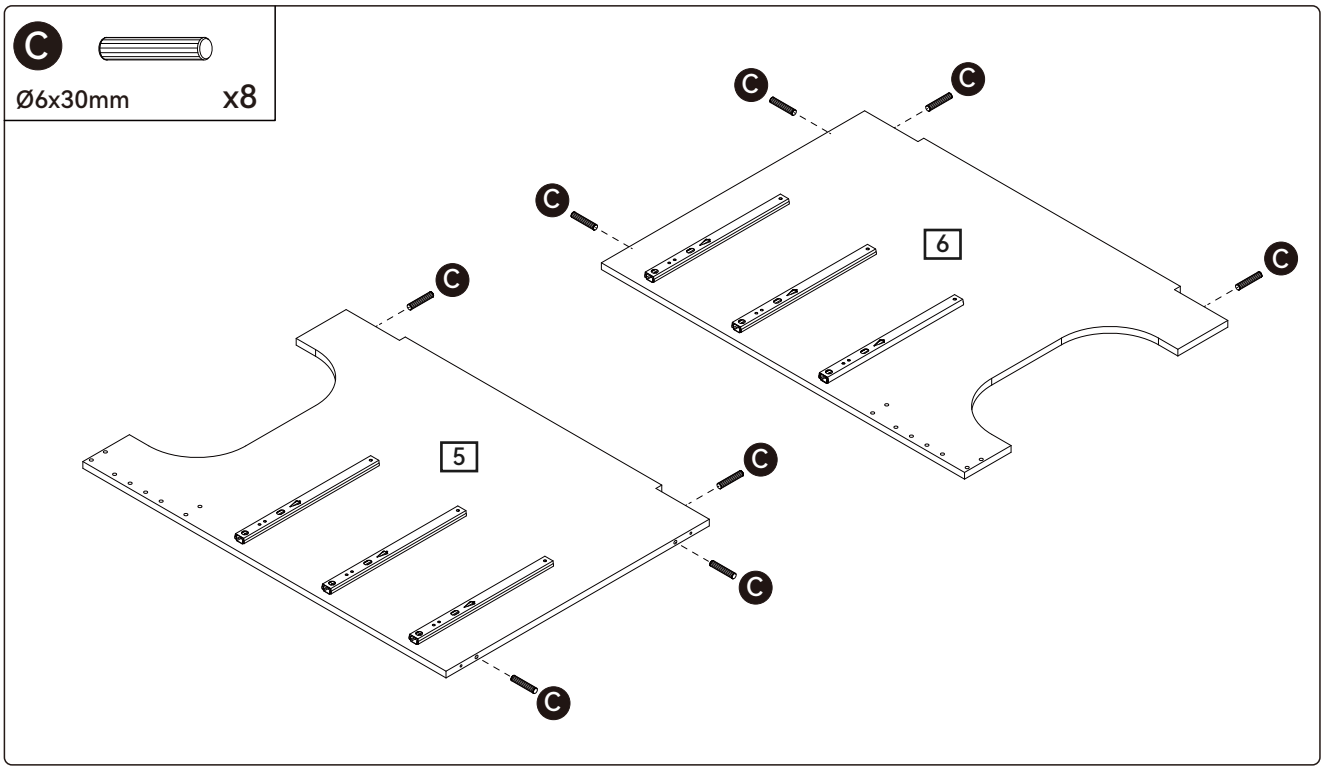

Insert wooden dowel (C) into part (5, 6).

Step 3

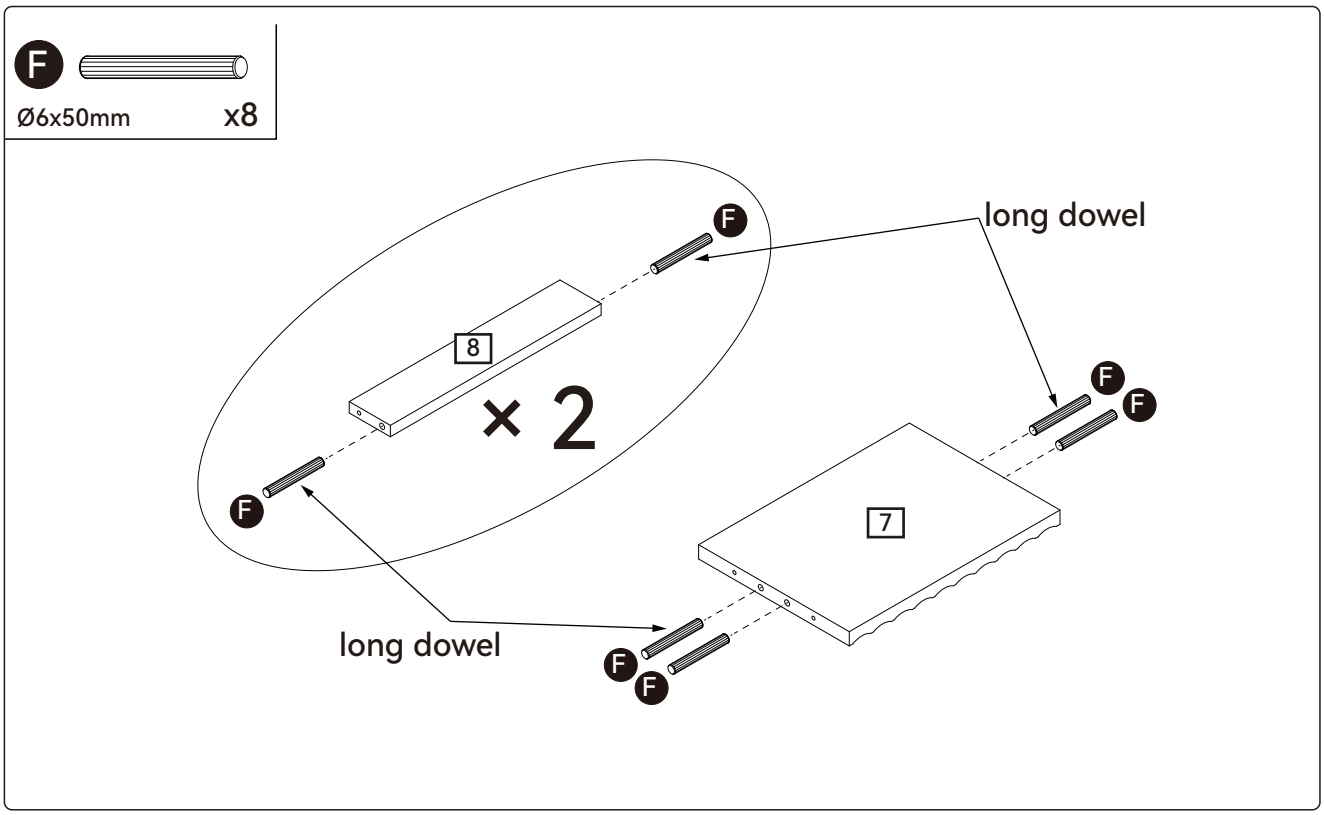

Insert wooden dowel (F) into part (7, 8).

Step 4

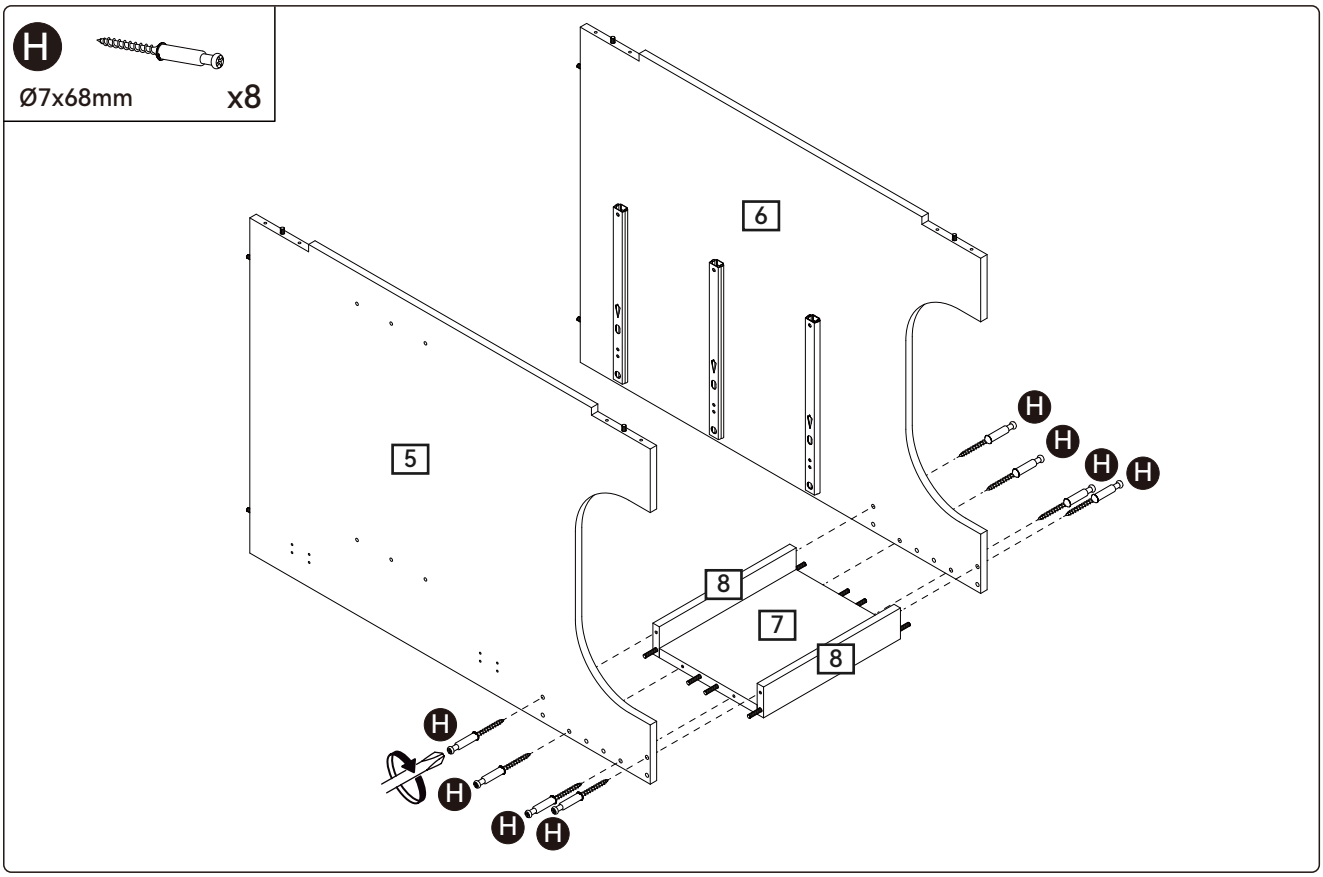

attach part (5, 6) to part (7, 8) using screw (H) and a screwdriver.

Step 5

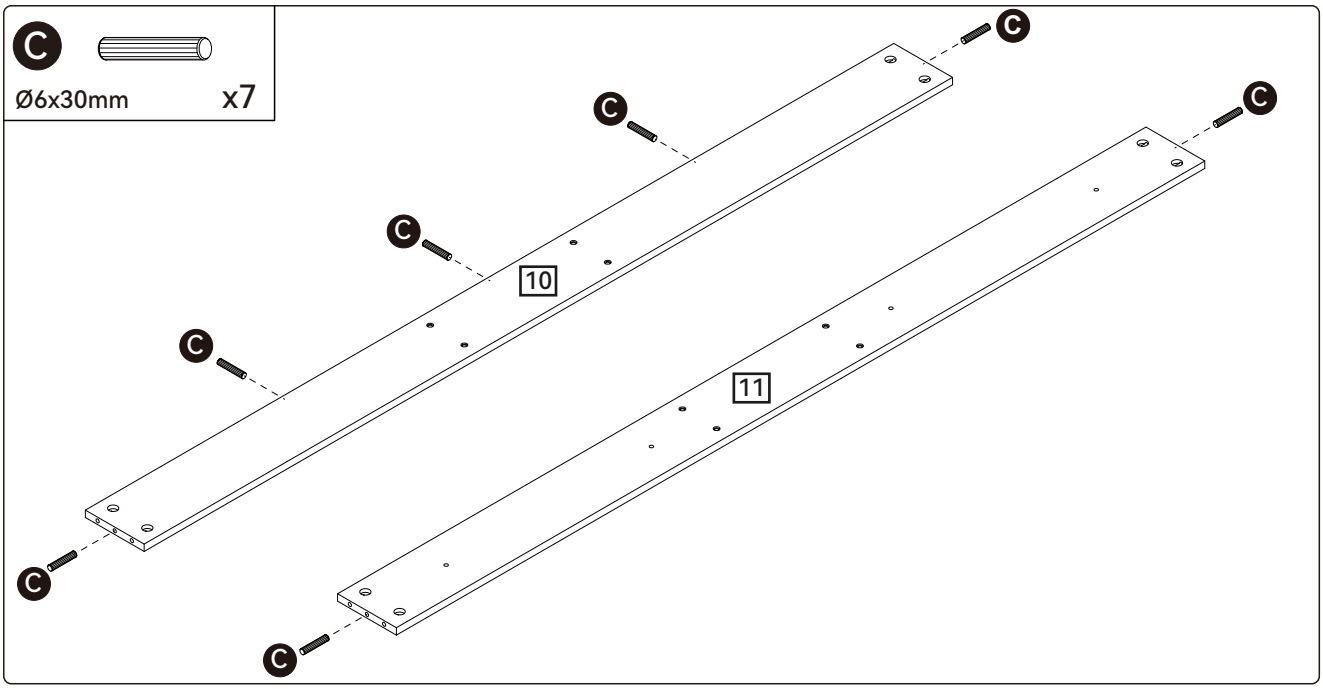

insert wooden dowel (C) into part (10, 11).

Step 6

E

Ø5x40mm x8

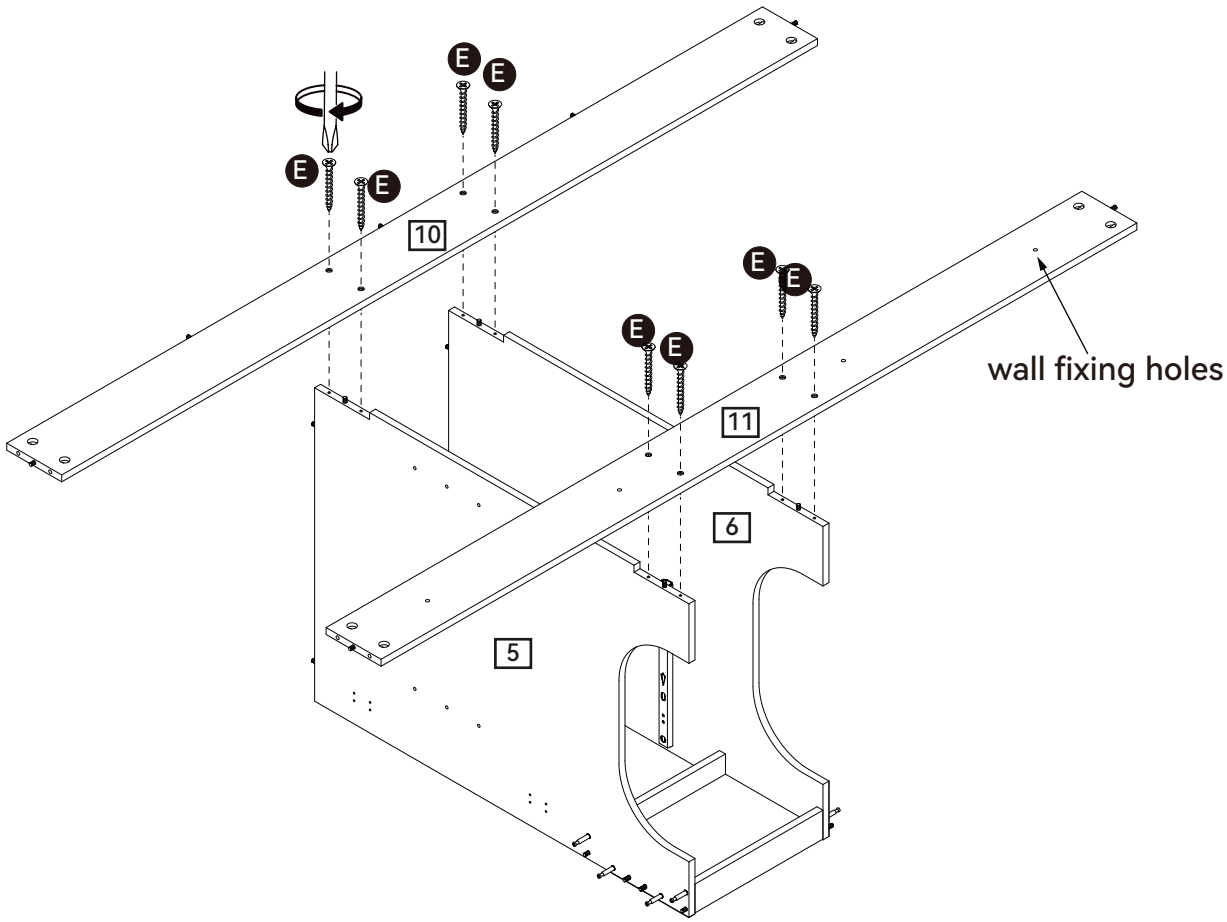

Attach part (10, 11) to part (5, 6) using screw (E) and a screwdriver.

Step 7

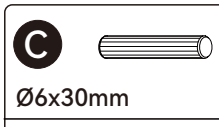

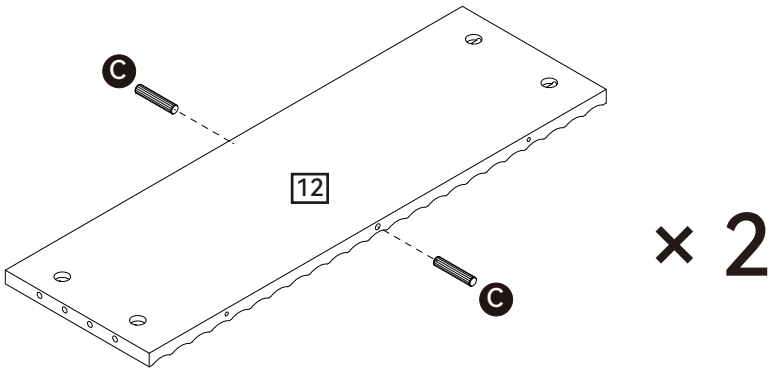

Insert wooden dowel (C) into part (12).

Step 8

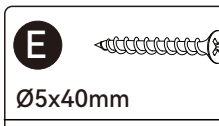

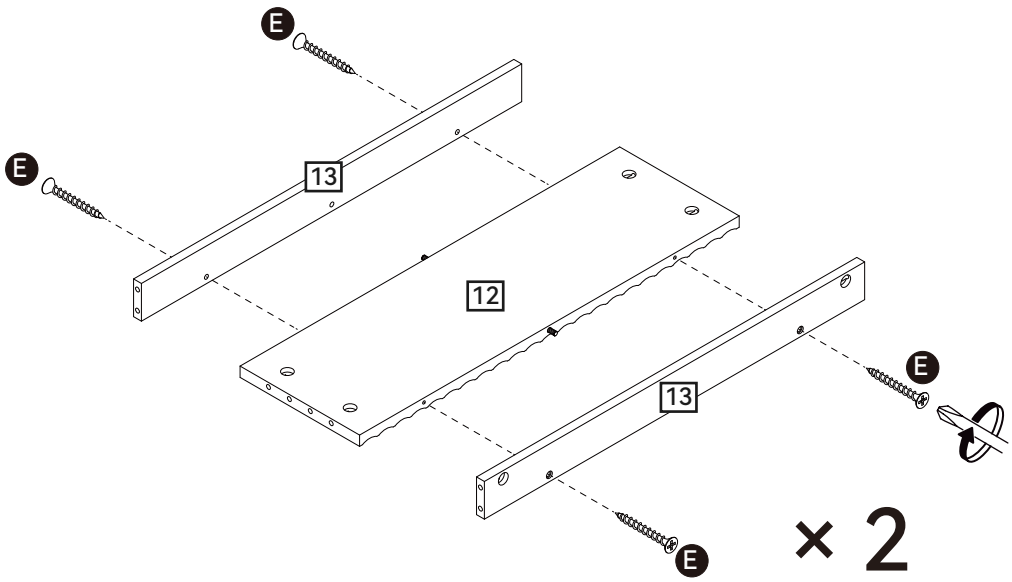

Attach part (13) to part (12) using screw (E) with a screwdriver.

Step 9

B

Ø15x9.6mm x8

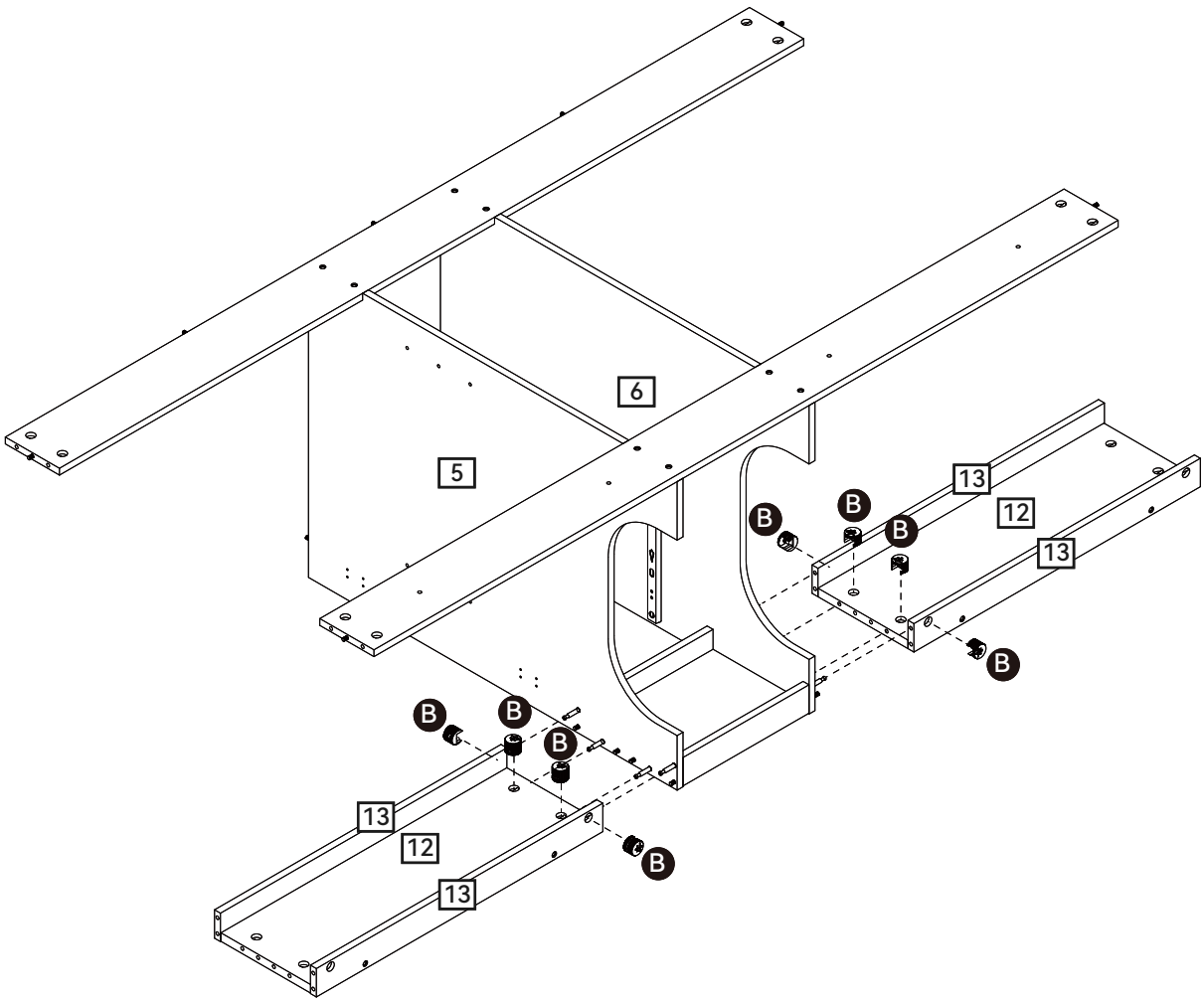

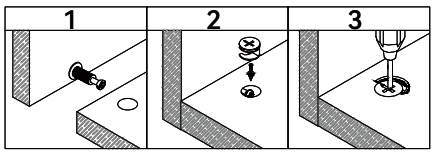

Attach part (12, 13) to part (5, 6), then insert and secure cam lock (B) to part (12, 13) to lock it.

Step 10

C

Ø6x30mm x8

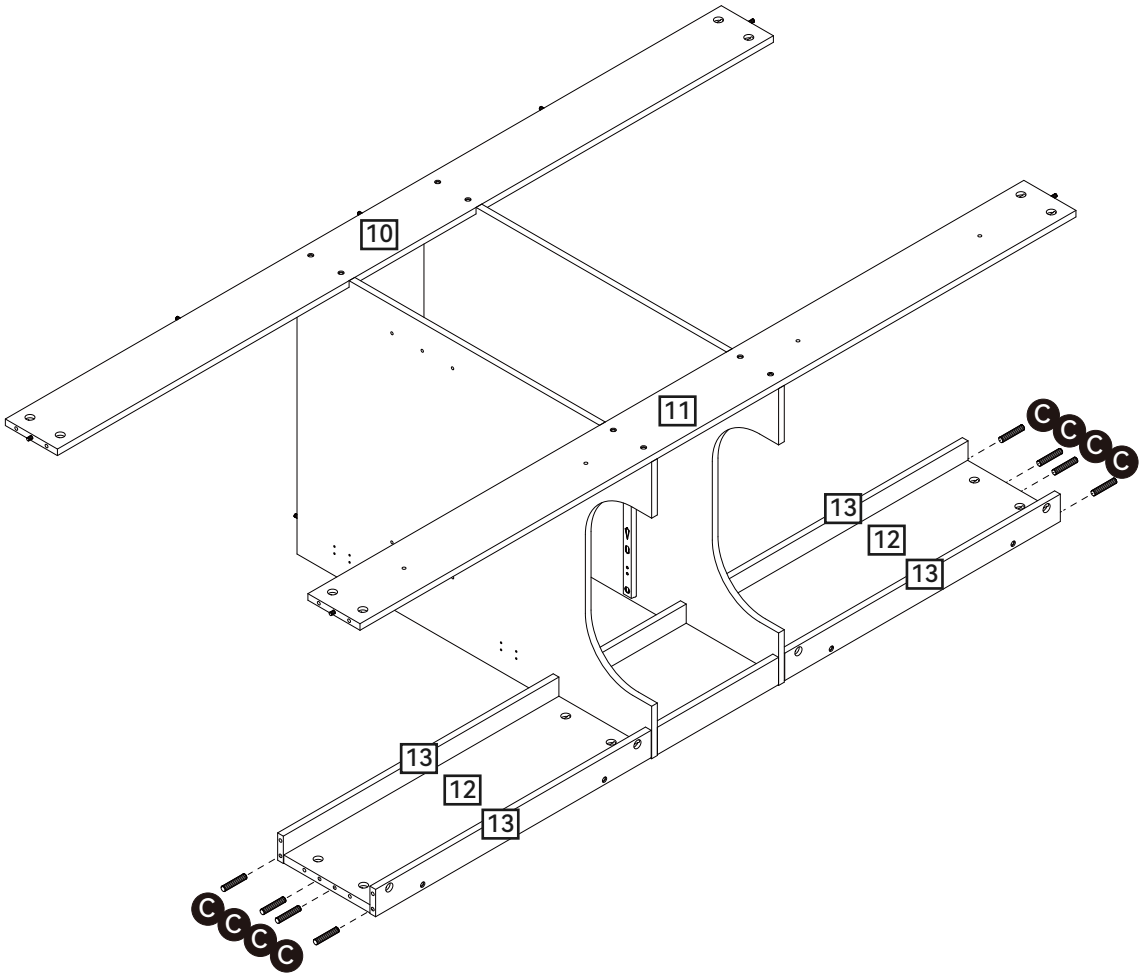

Insert wooden dowel (C) into part (12, 13).

Step 11

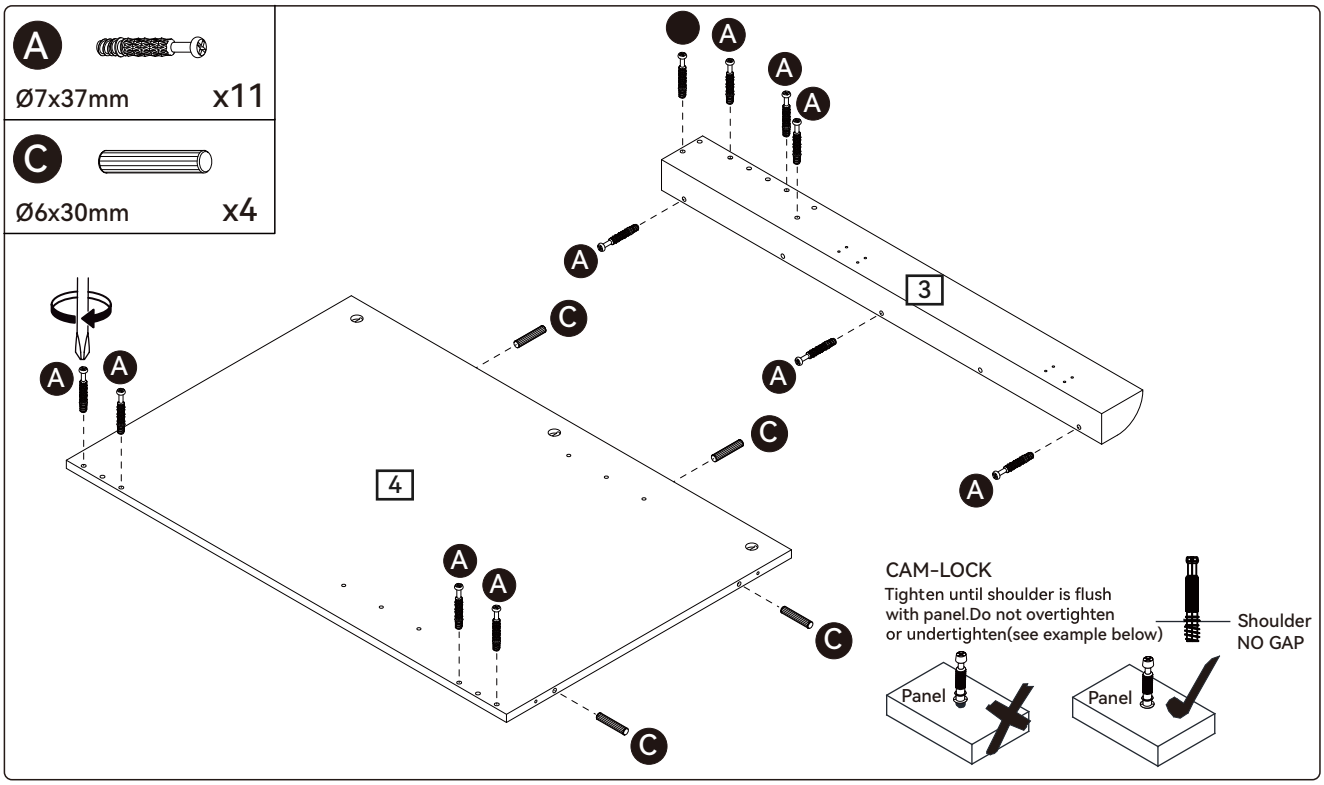

Attach cam bolt (A) to part (3, 4) with a screwdriver.
Insert wooden dowel (C) into part (4).

Step 12

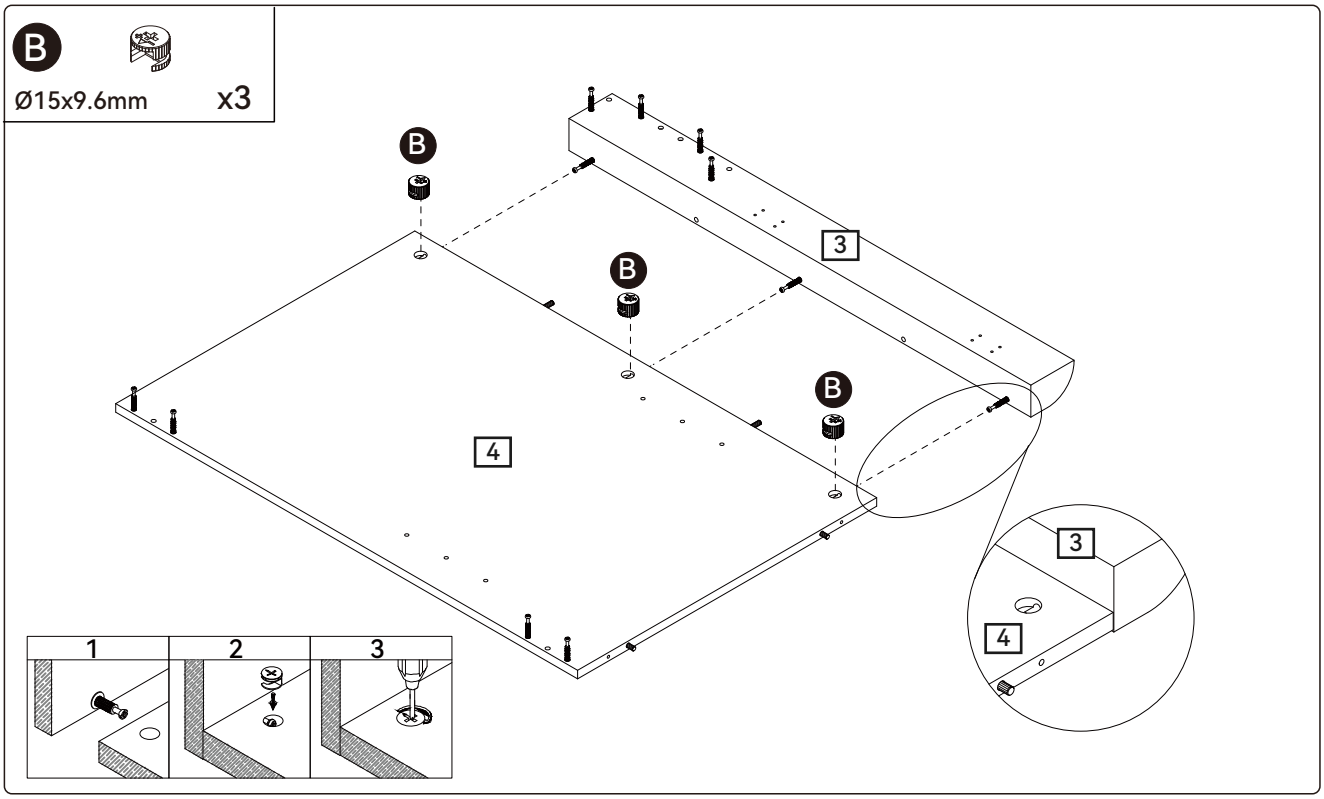

Attach part (3) to part (4), then insert and secure cam lock (B) to part (4) to lock it.

Step 13

B



Ø15x9.6mm x8

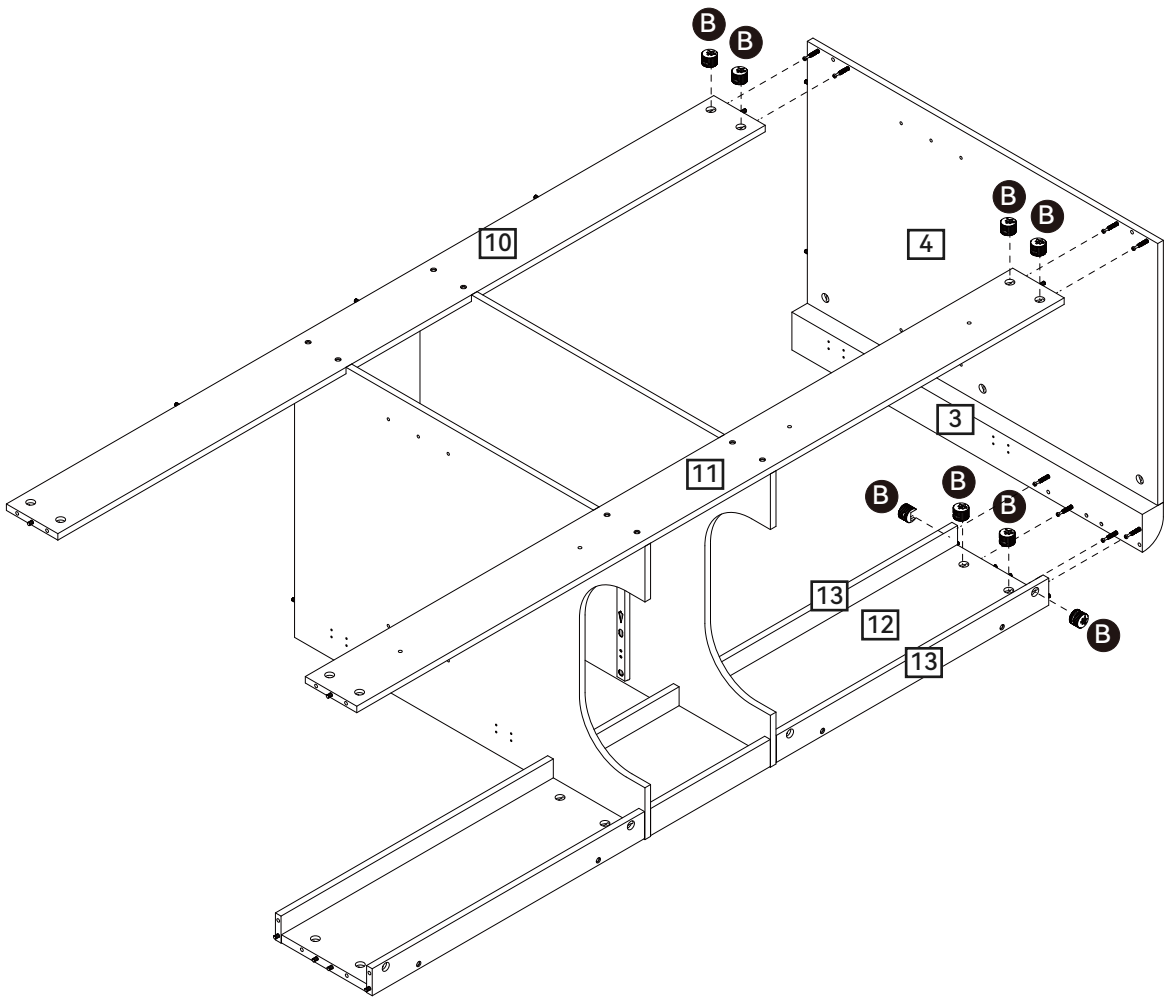

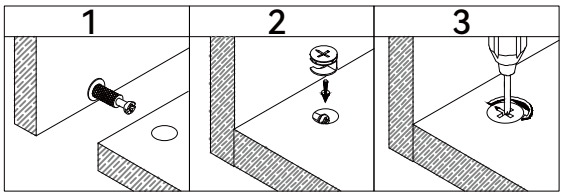

Attach part (3, 4) to part (10, 11, 12, 13), then insert and secure cam lock (B) to part (10, 11, 12, 13) to lock it.

Step 14

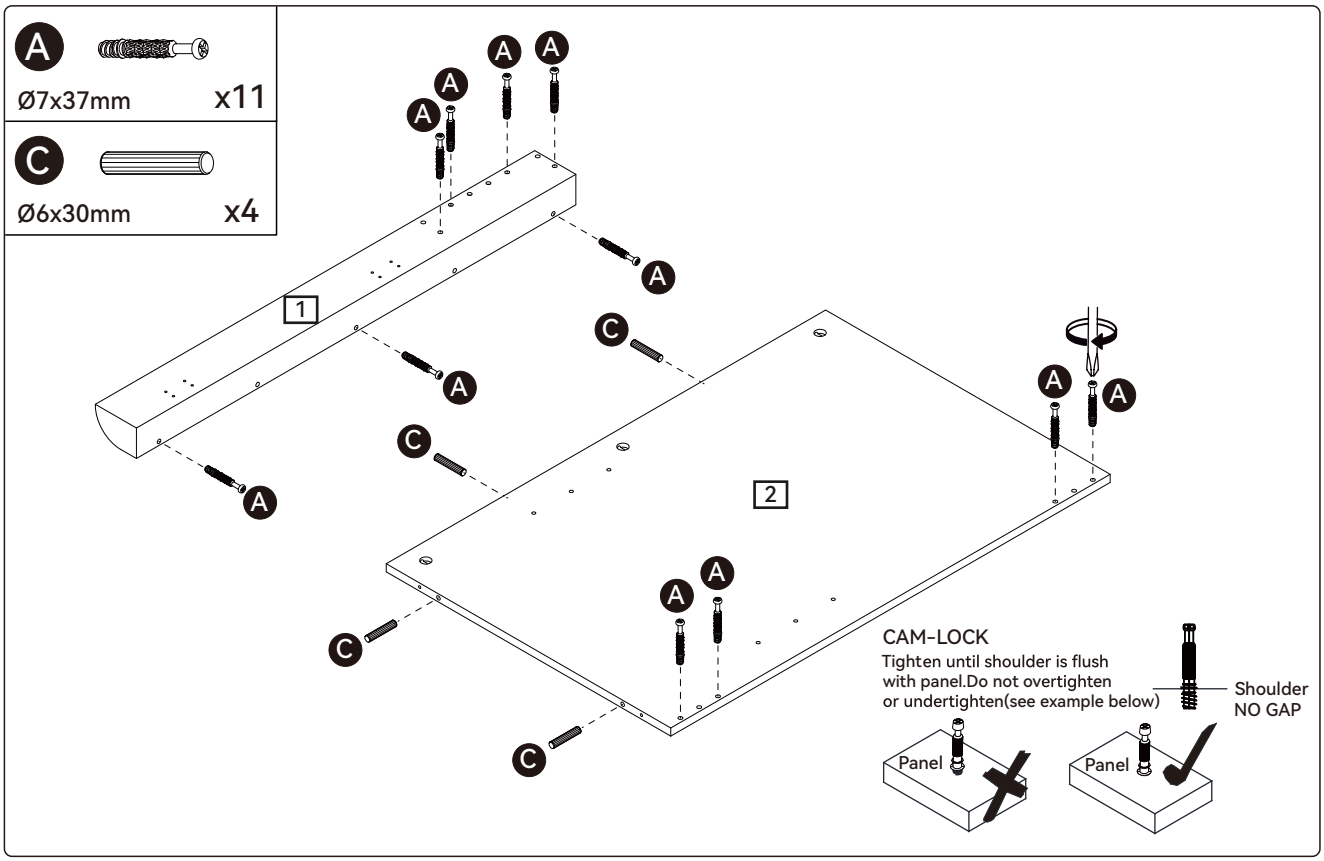

Attach cam bolt (A) to part (1, 2) with a screwdriver.
Insert wooden dowel (C) into part (2).

Step 15

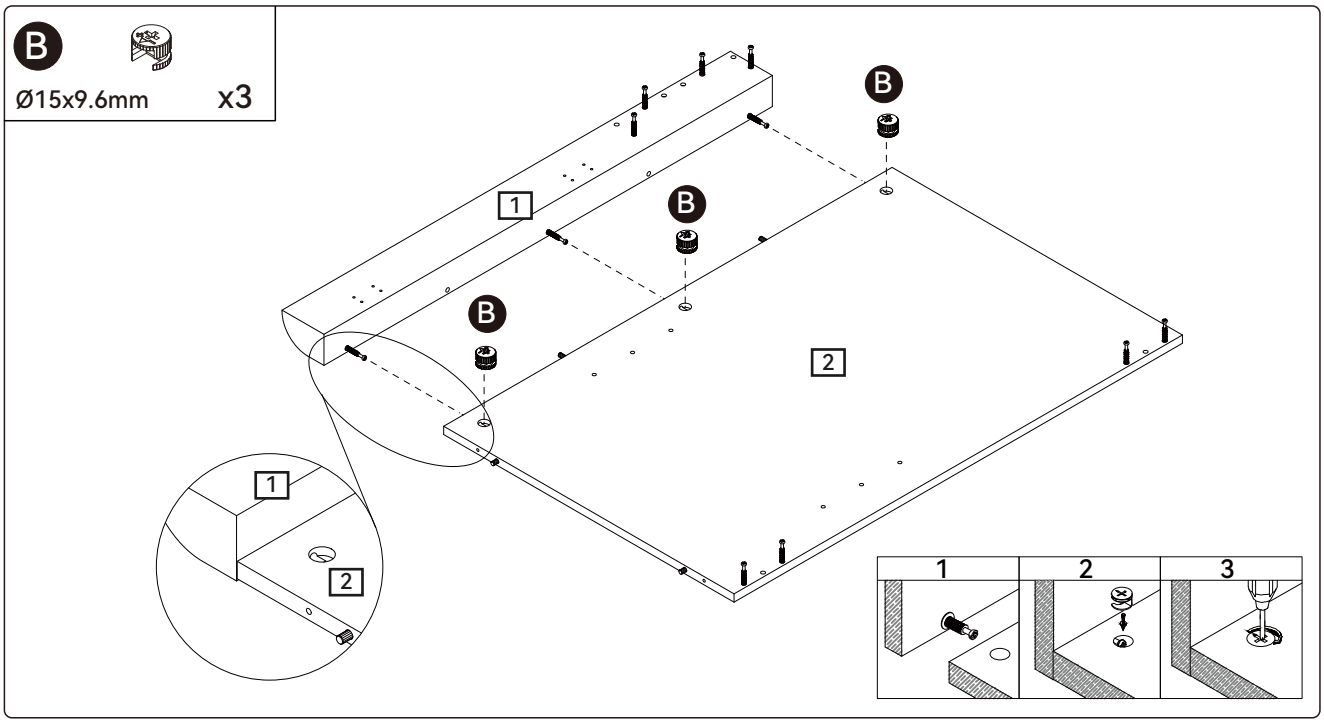

Attach part (1) to part (2), then insert and secure cam lock (B) to part (2) to lock it.

Step 16

B



Ø15x9.6mm x8

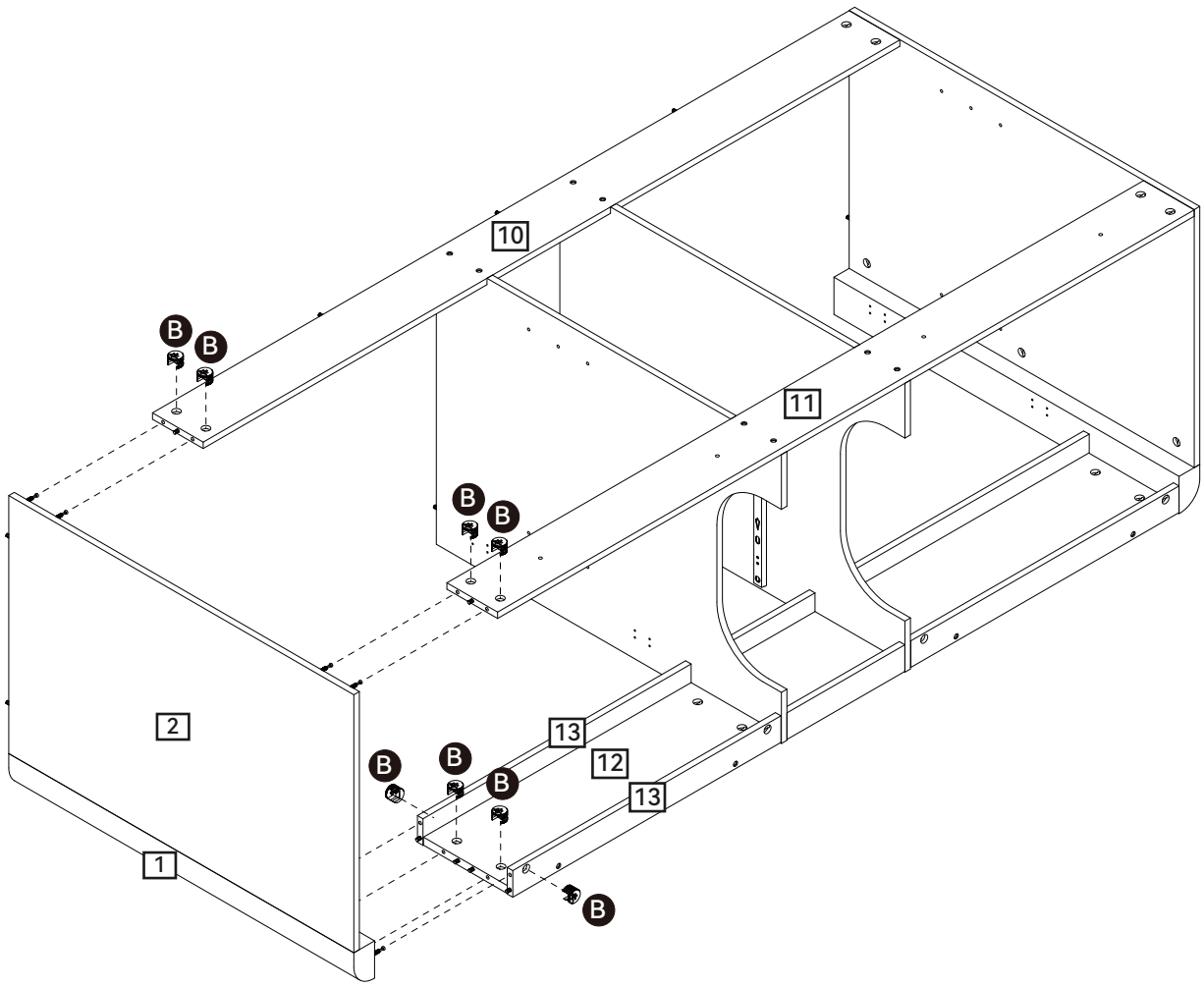

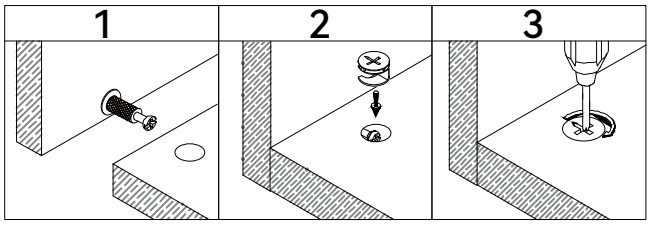

Attach part (1, 2) to part (10, 11, 12, 13), then insert and secure cam lock (B) to part (10, 11, 12, 13) to lock it.

Step 17

E



Ø5x40mm x12

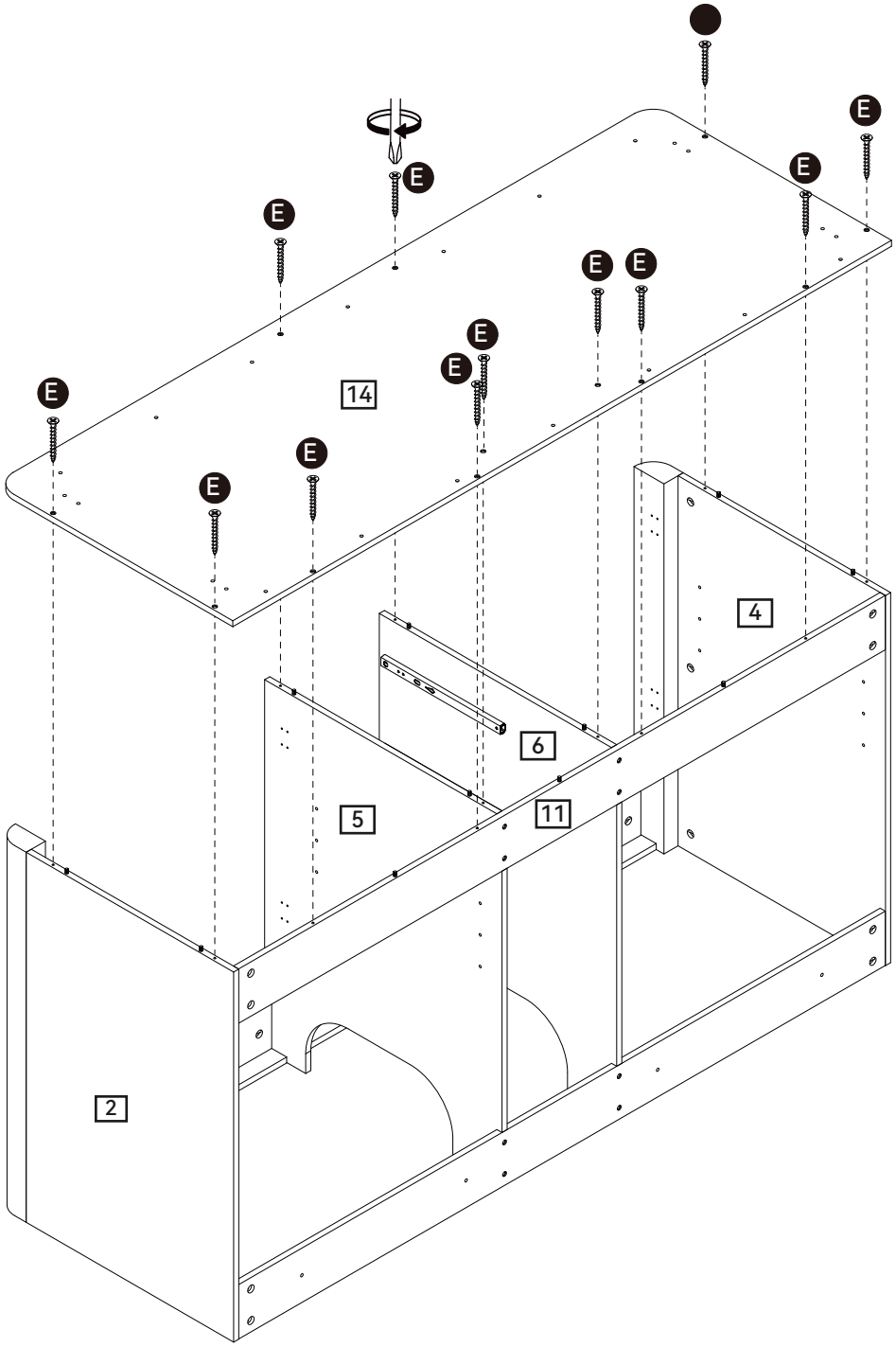

Attach part (14) to part (2, 4, 5, 6, 11) using screw (E) and a screwdriver.

Step 18

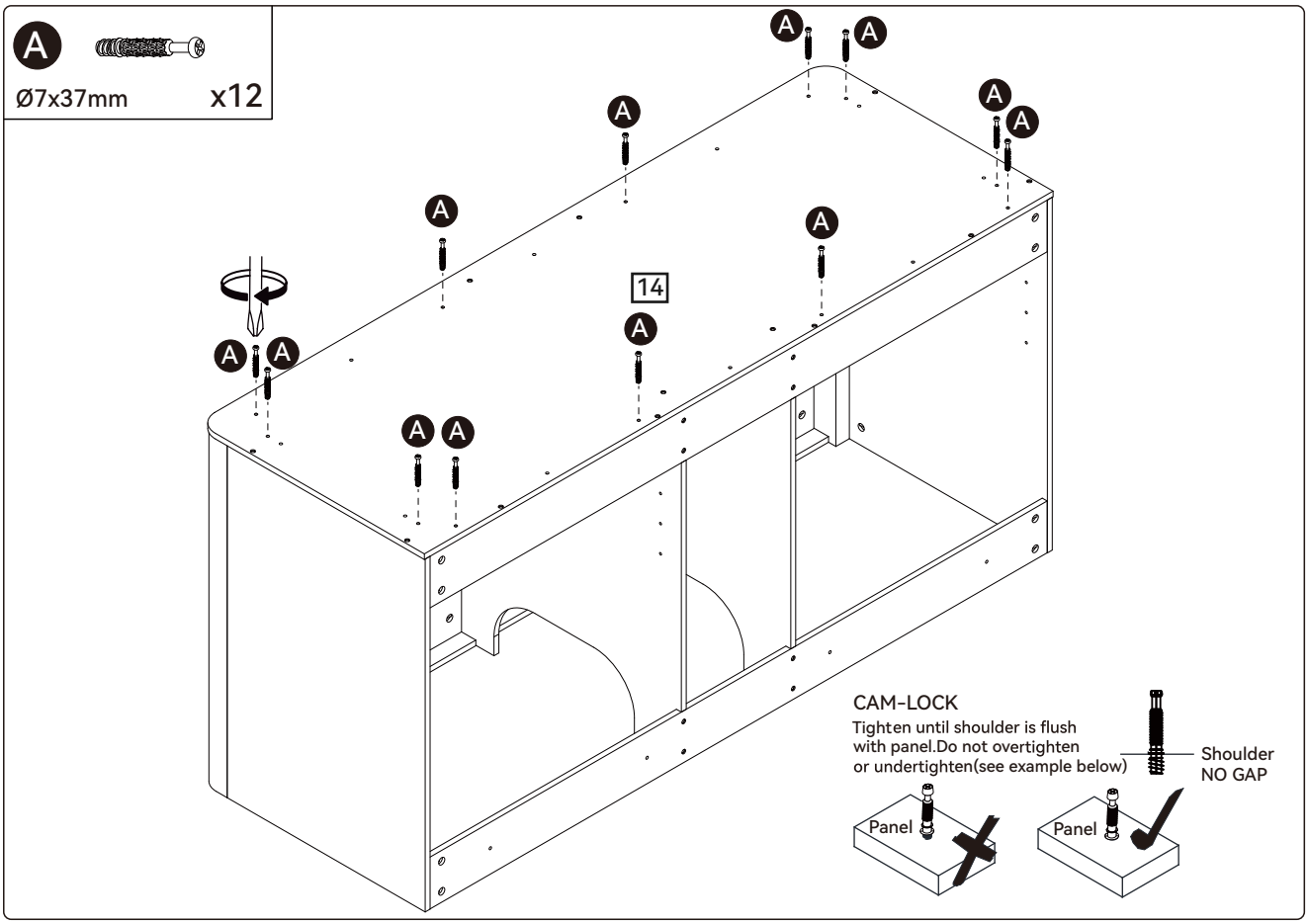

Attach cam bolt (A) to part (14) with a screwdriver.

Step 19

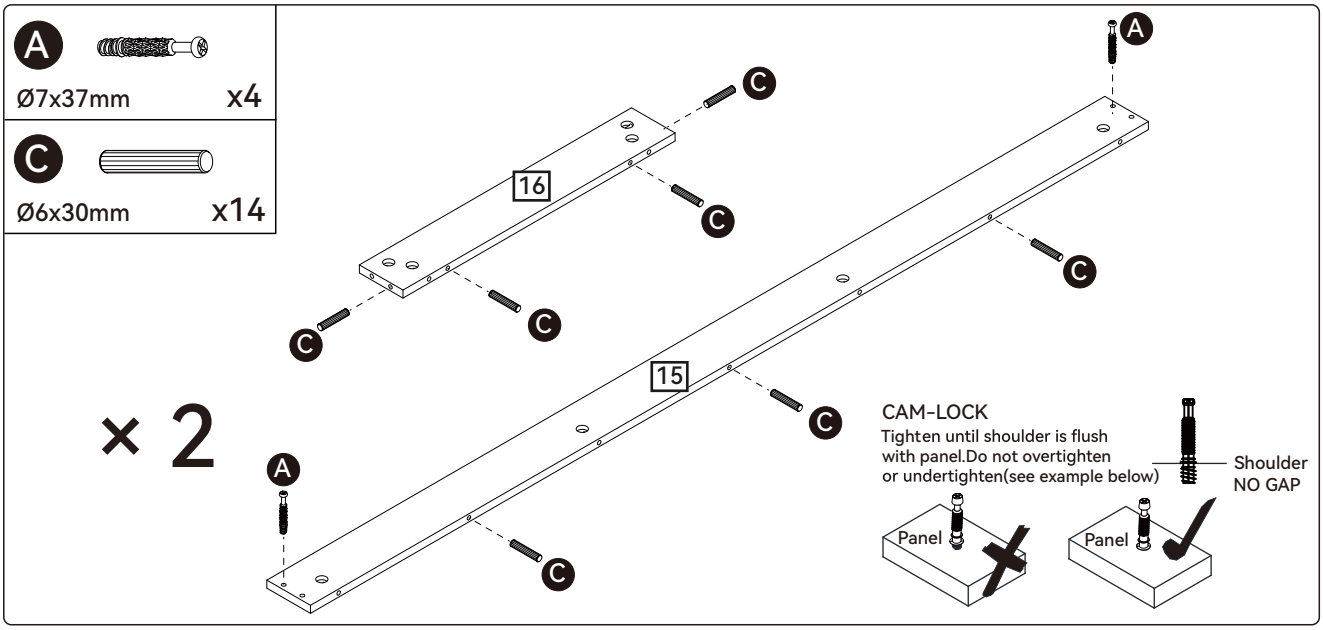

Attach cam bolt (A) to part (15) with a screwdriver.
Insert wooden dowel (C) into part (15, 16).

Step 20

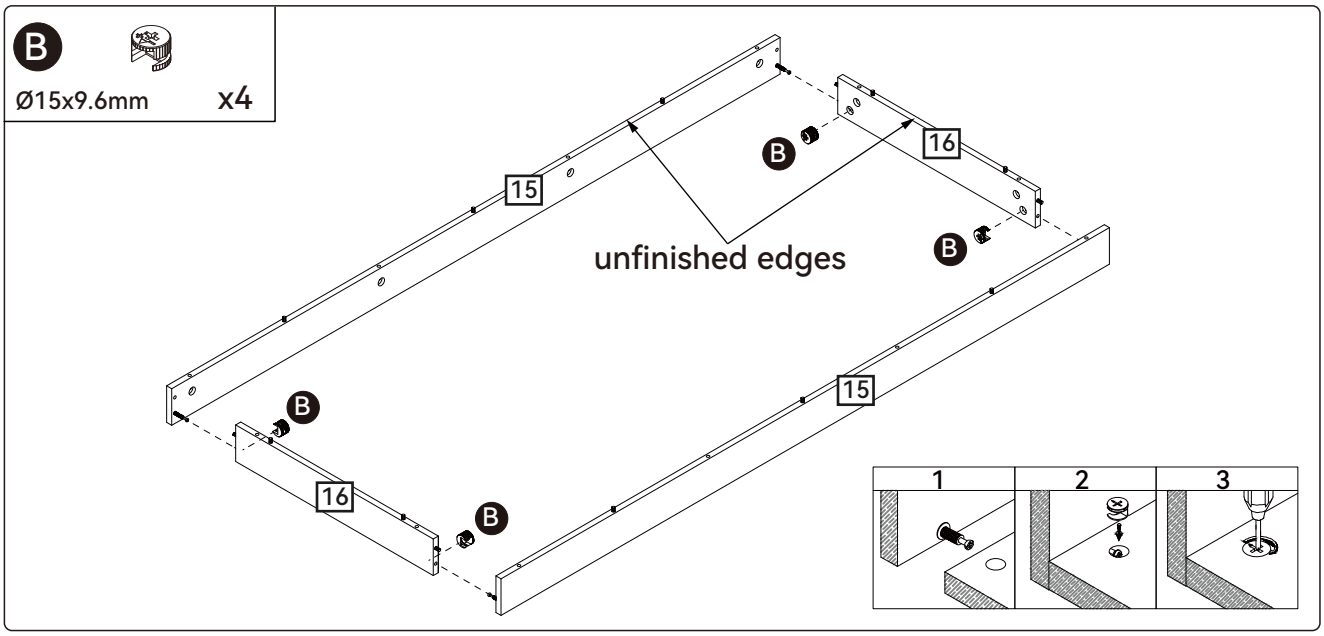

Attach part (15) to part (16), then insert and secure cam lock (B) to part (16) to lock it.

Step 21

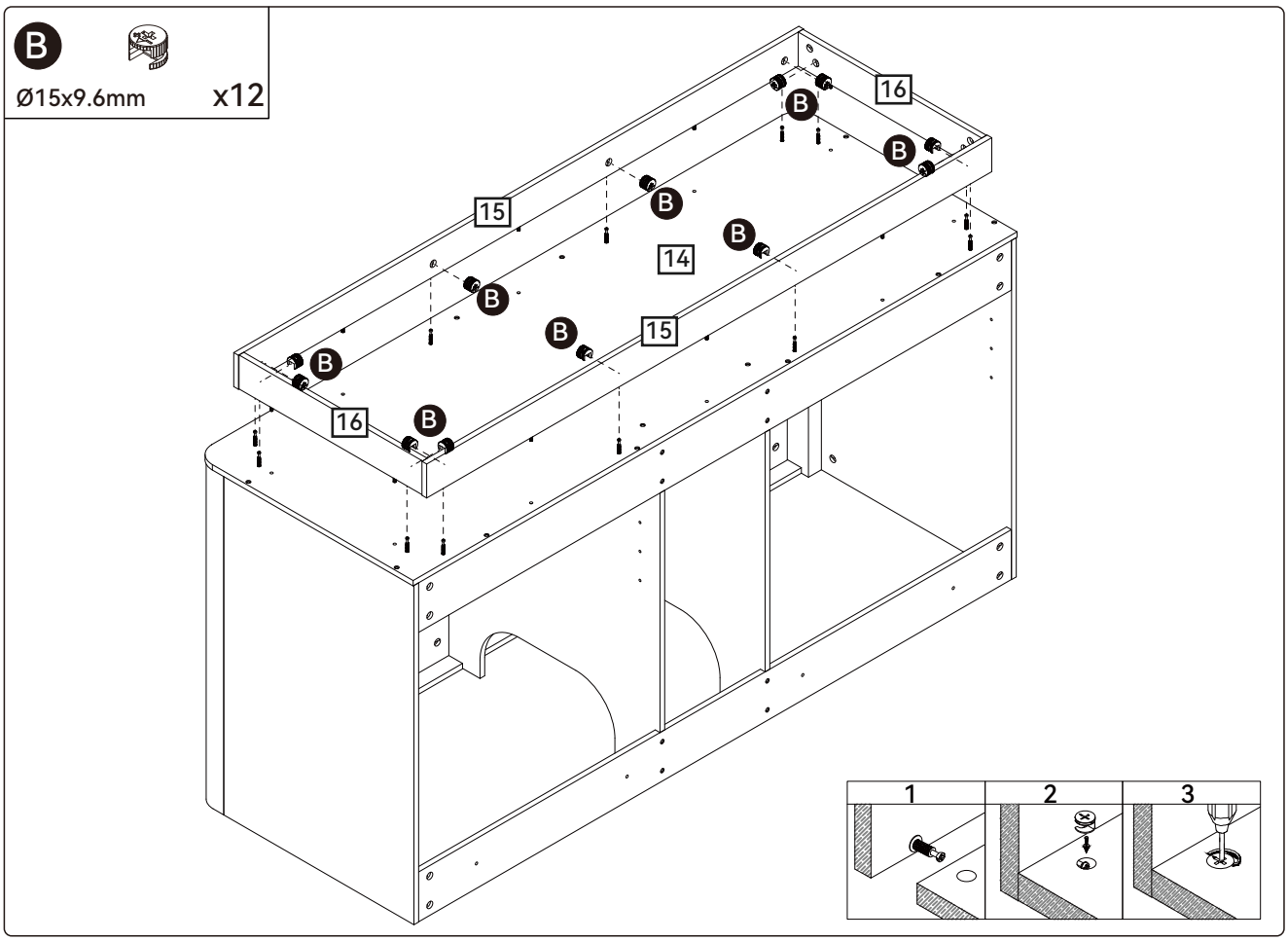

Attach part (15, 16) to part (14), then insert and secure cam lock (B) to part (15, 16) to lock it.

Step 22

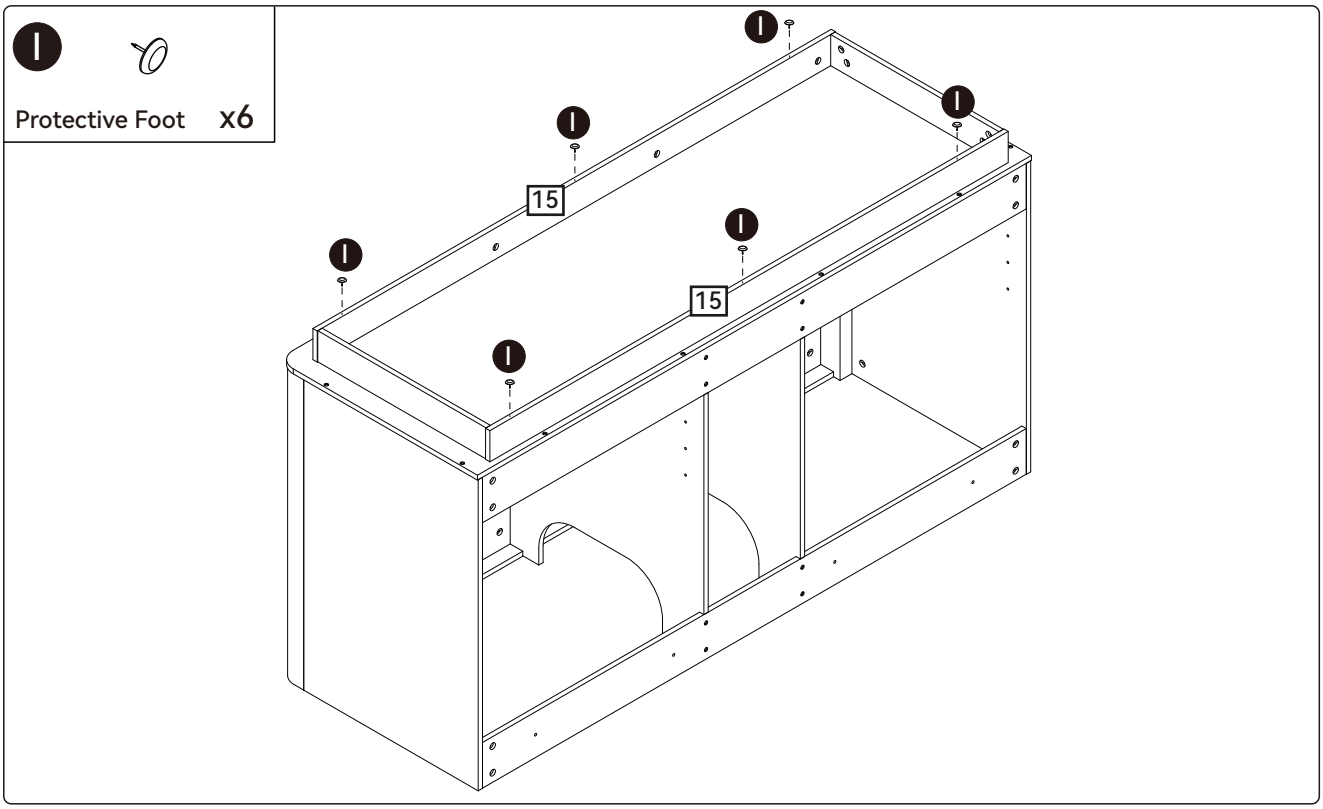

Insert protective foot (I) to part (15).

Step 23

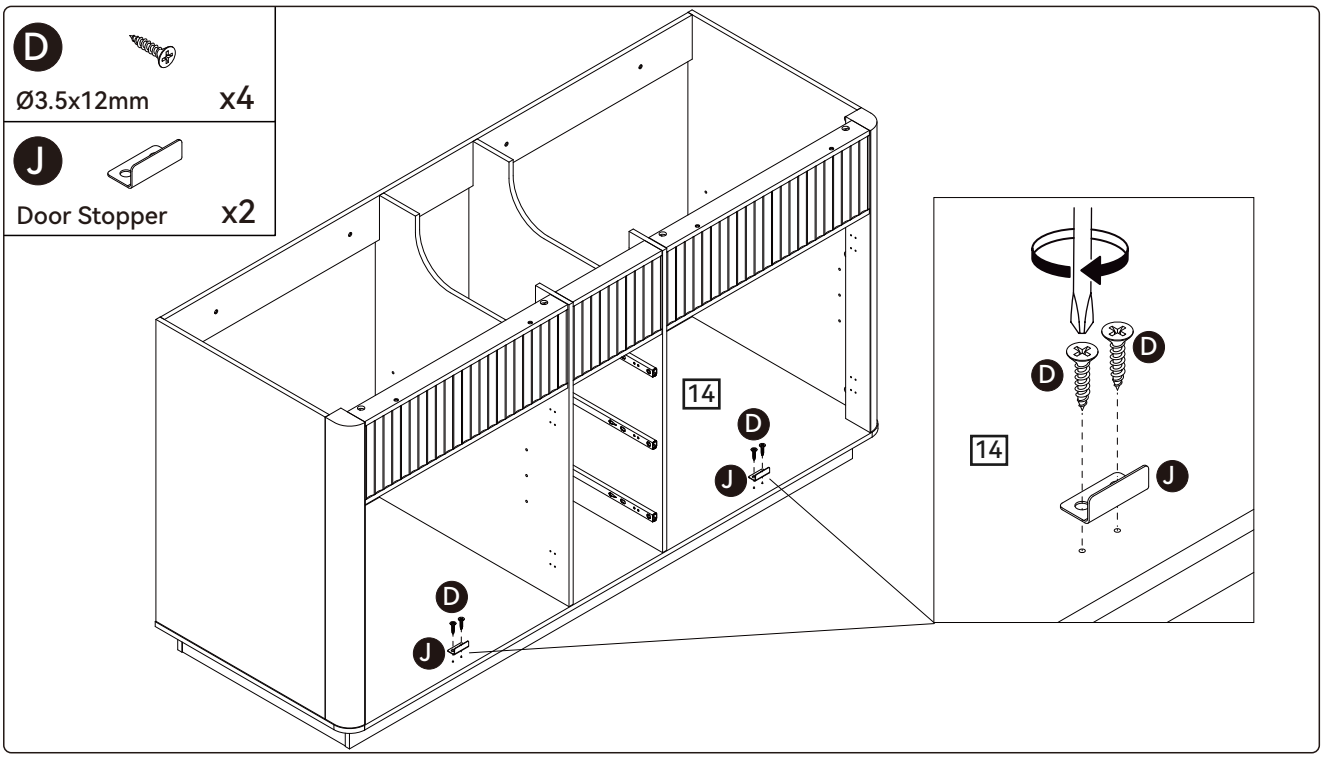

Attach door stopper to part (14) using screw (D) with a screwdriver.

Step 24

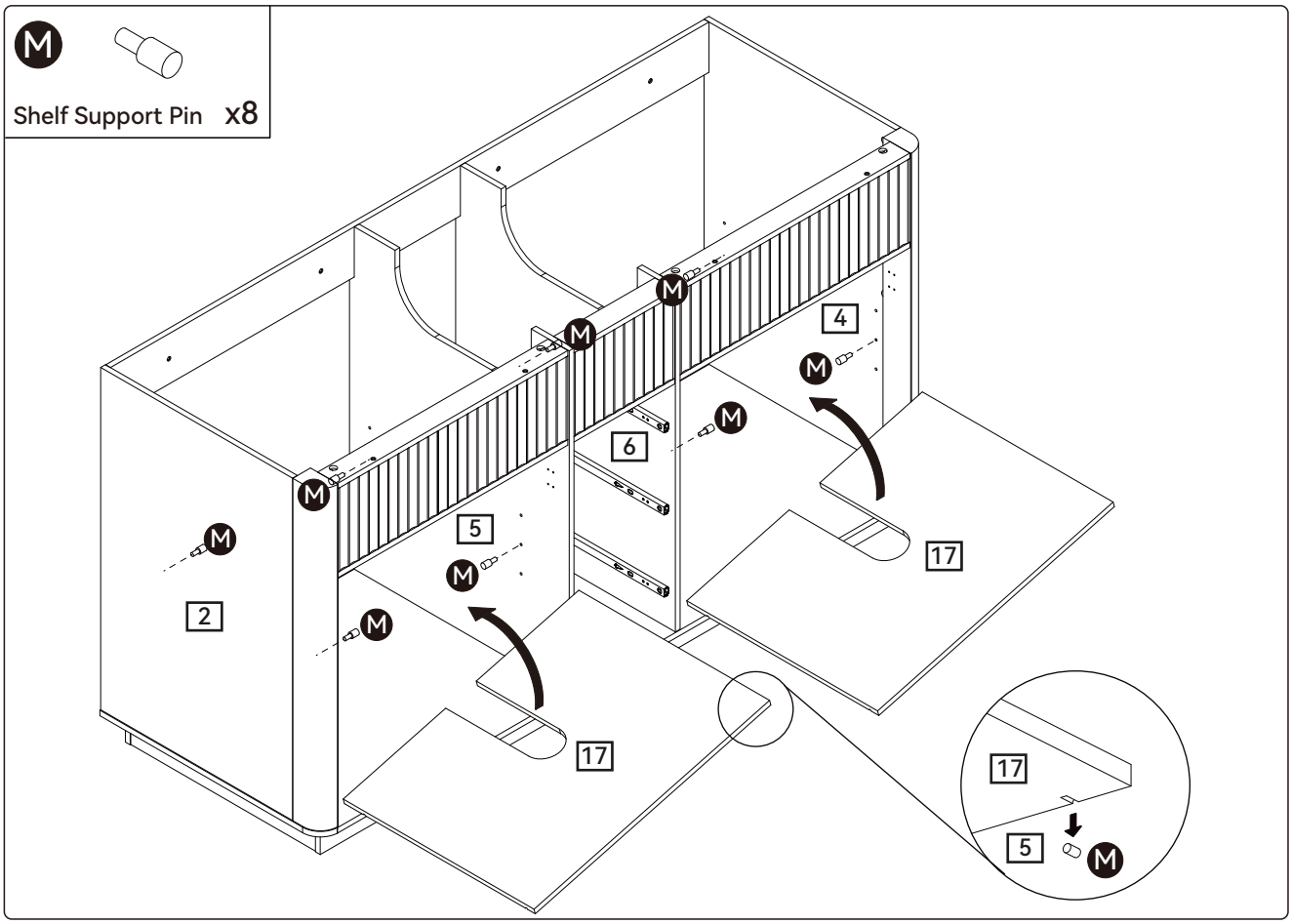

Insert shelf support pins (M) into part (2, 4, 5, 6), and then place part (17) on the top of support pins.

Step 25

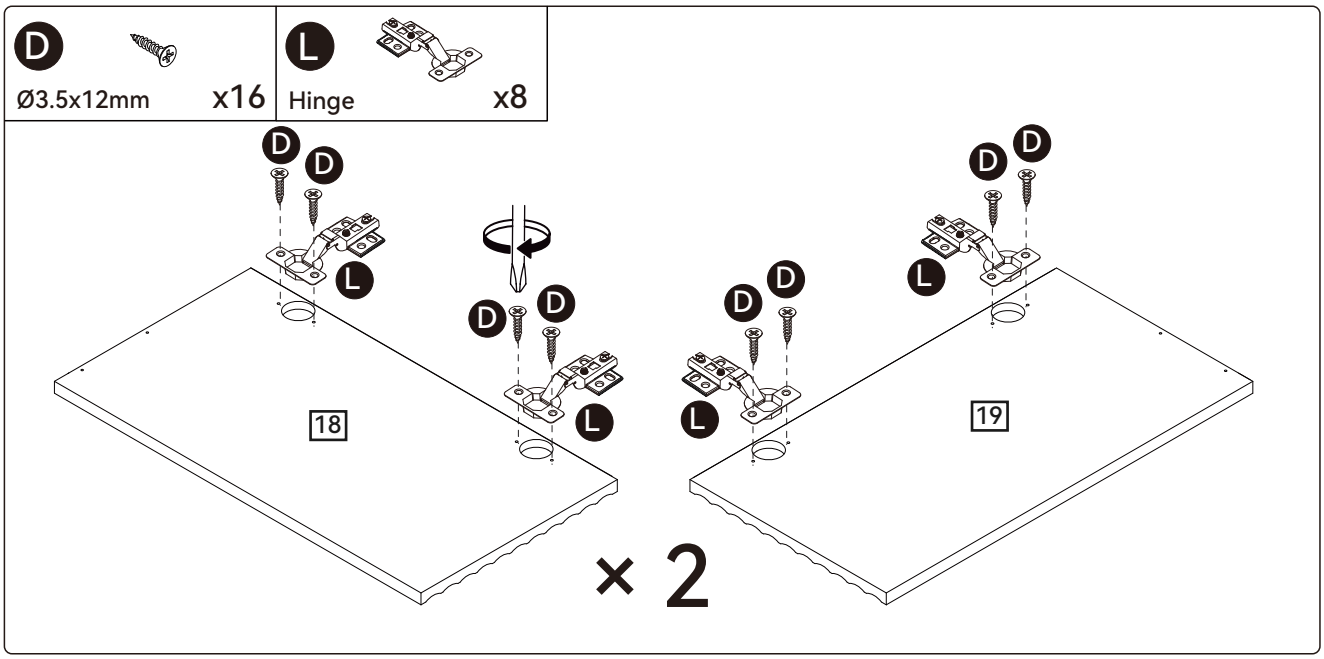

Attach hinge (L) to part (18, 19) using screw (D) with a screwdriver.

EN

Step 26

D  Ø3.5x12mm	x16
K  Handle & Fixings	x4

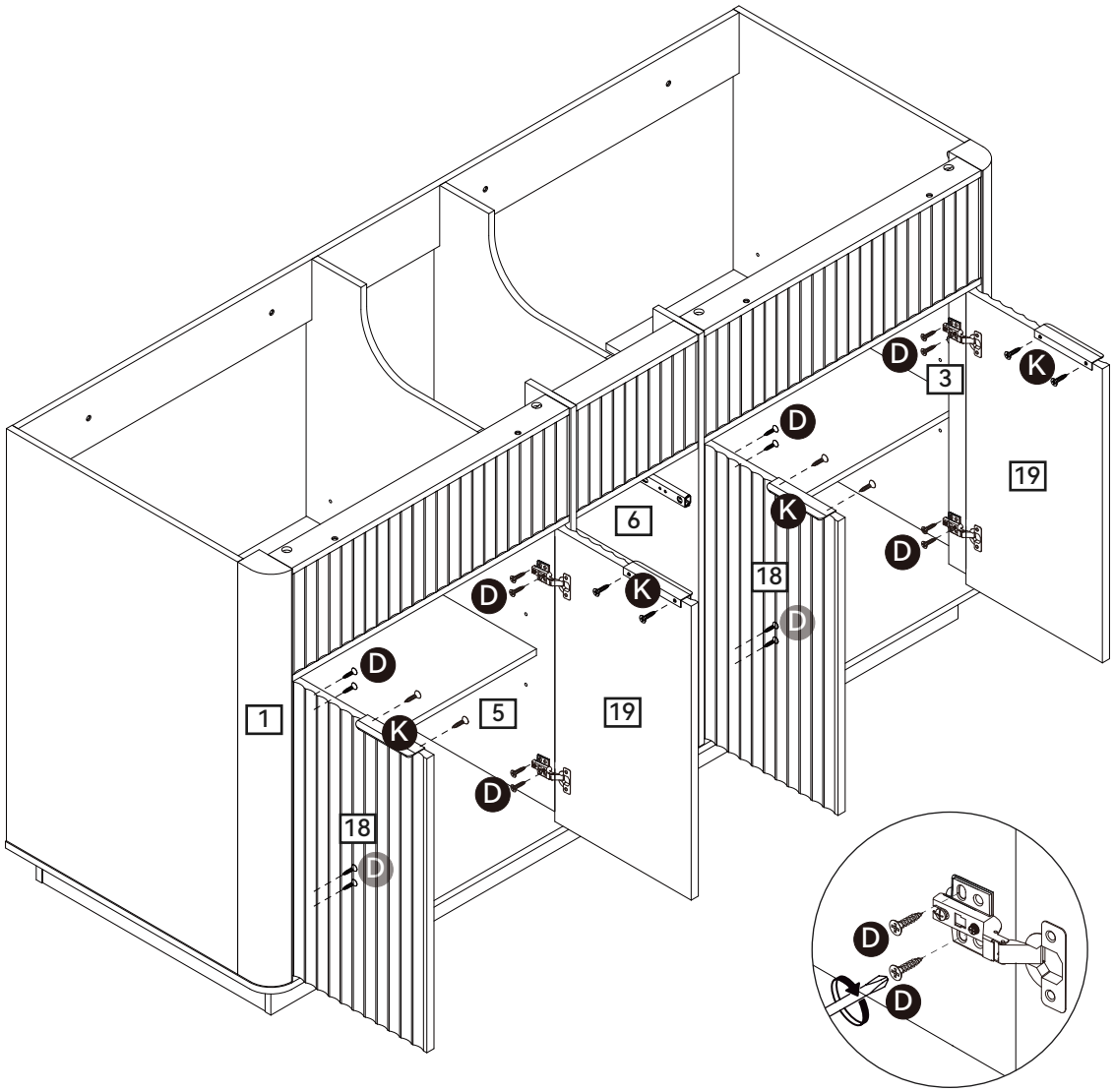

Attach hinge (L) to part (1, 3, 5, 6) using screw (D) with a screw driver.
Attach handle (K) to part (18,19) using screw (K) with a screw driver.

Step 27

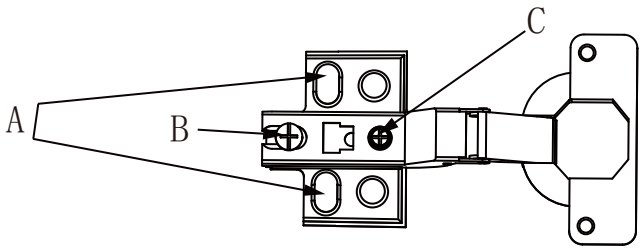

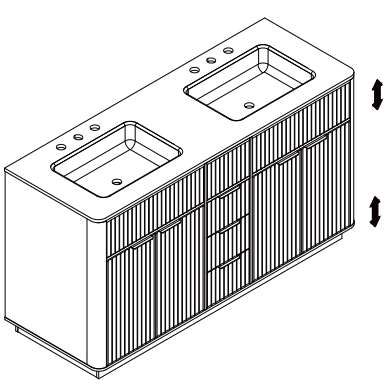

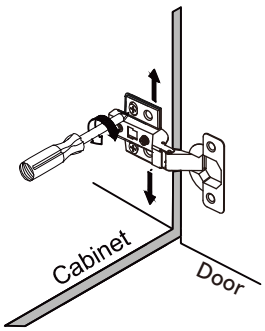

To adjust the vertical height.

Loosen the two screws "A" on both hinges.They are usually in slotted holes which allows you to adjust up or down by a few mm.Then tighten back up.

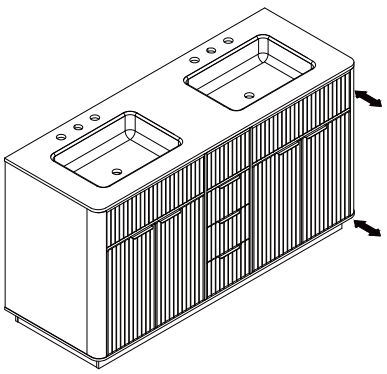

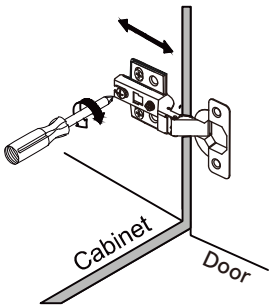

To adjust depth.

Loosen screw "B" and adjust door, if the door cannot be adjusted, please loosen screw "C", then try again. Tighten screw "B" and "C".

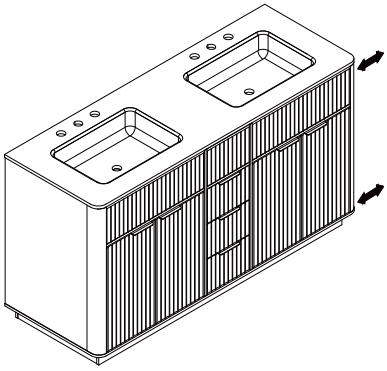

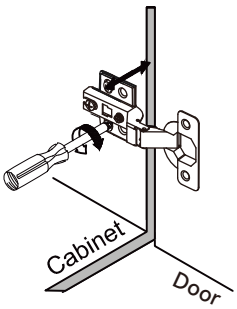

To adjust side ways.

Turning the screw "C" on BOTH hinges on each door.

Step 28

D



Ø3.5x12mm x16

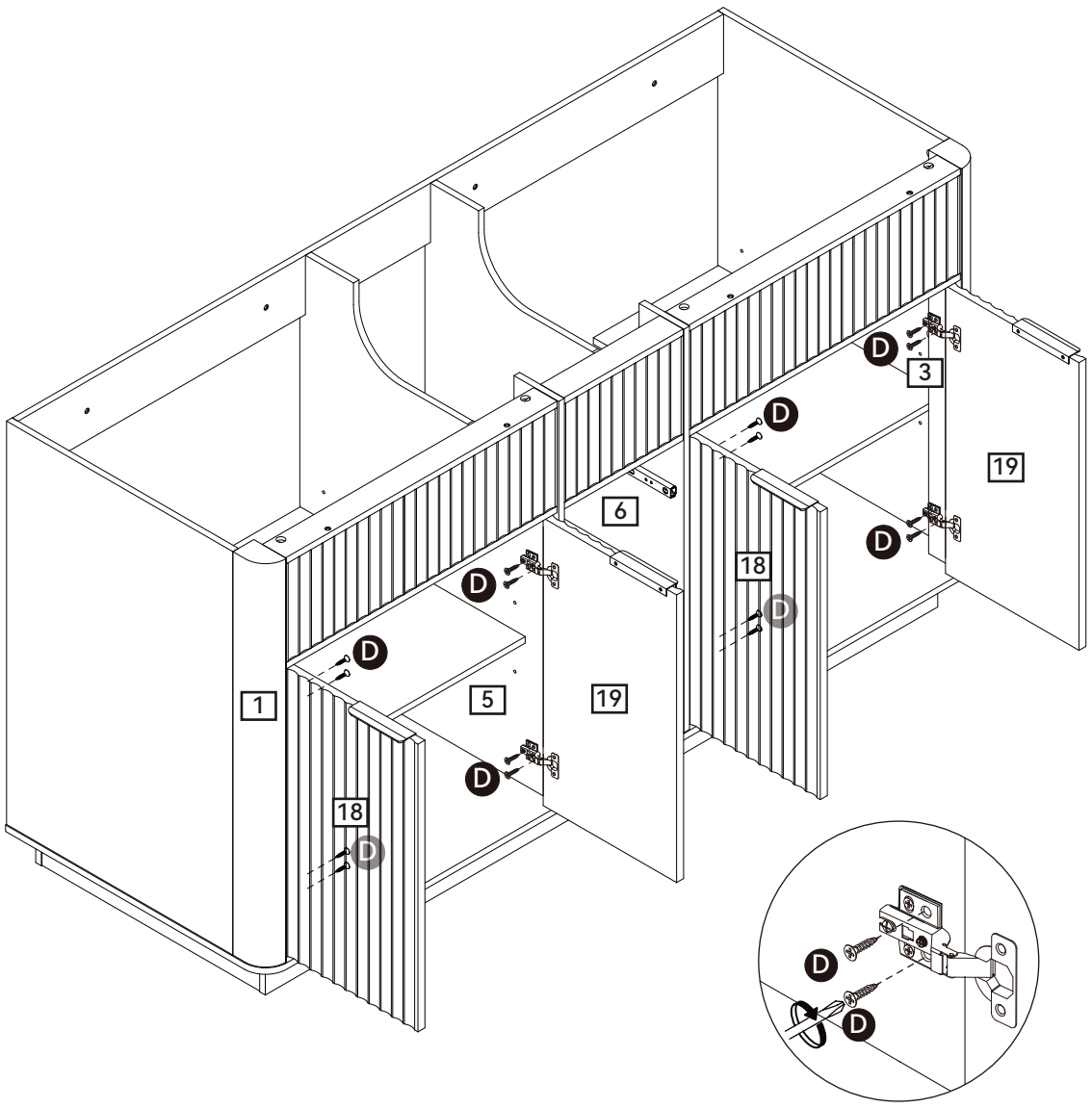

Secure hinge (L) to part (1, 3, 5, 6) using screw (D) with a screwdriver.

Step 29

E
Ø5x40mm x12

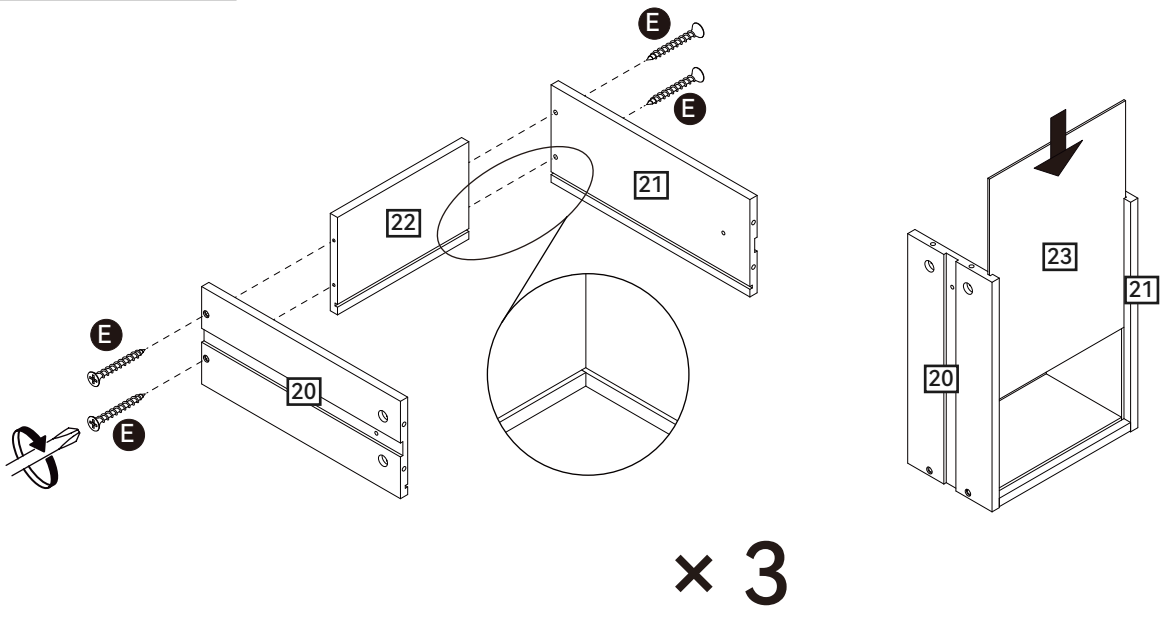

Attach parts (20, 21) to part (22) using screw (E) and a screwdriver.
Slide part (23) into the grooves.

Step 30

A
Ø7x37mm x12

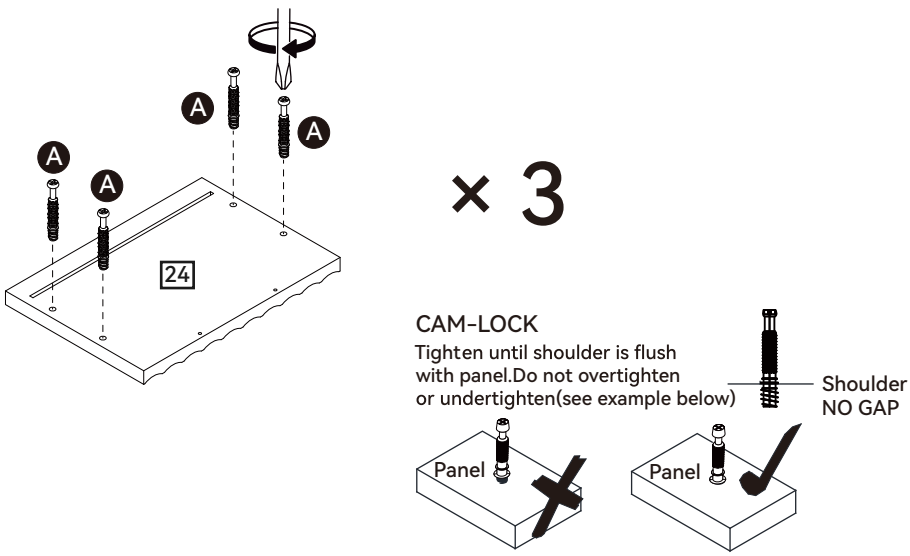

Attach cam bolt (A) to part (24) with a screwdriver.

Step 31

B

Ø15x9.6mm x12

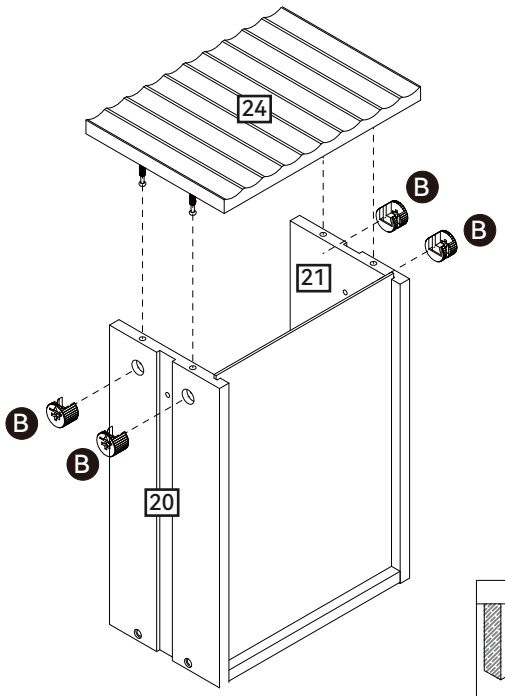

× 3

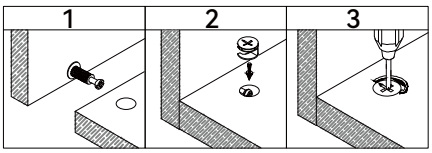

Attach part (24) to part (20,21), then insert and secure cam lock (B) to part (20, 21) to lock it.

Step 32

K

Handle & Fixings x3

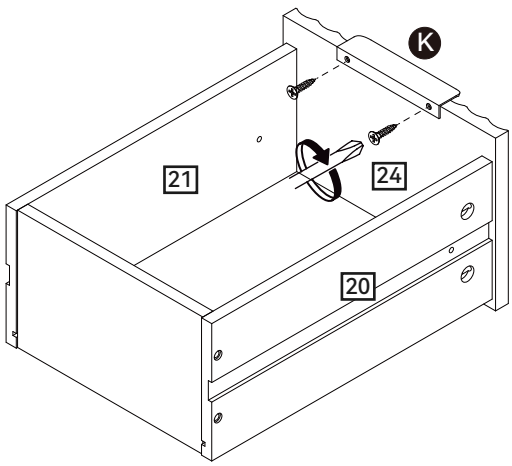

× 3

Attach handle (K) to part (24) using screw (K) with a screwdriver.

Step 33

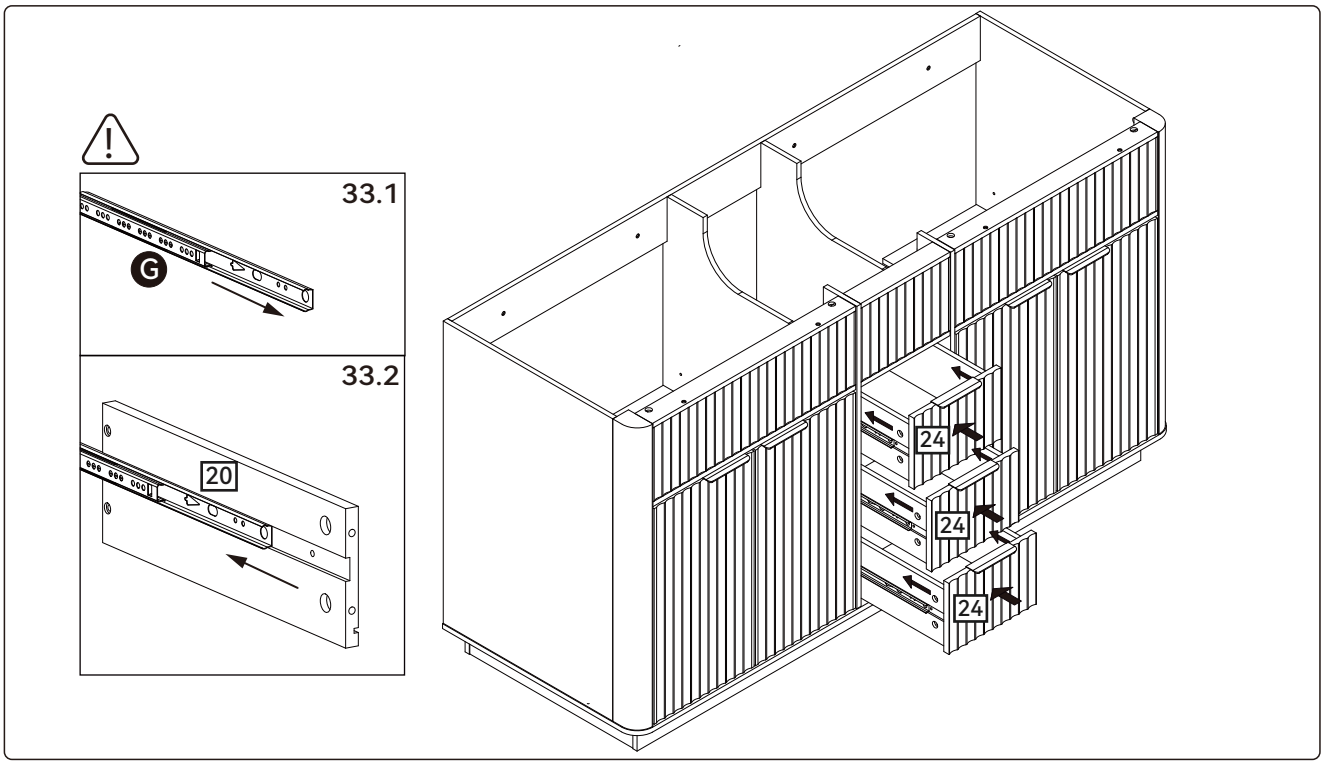

Slide the drawer slide (G) into the grooves on both sides of the drawer as shown in the diagram.

Step 34

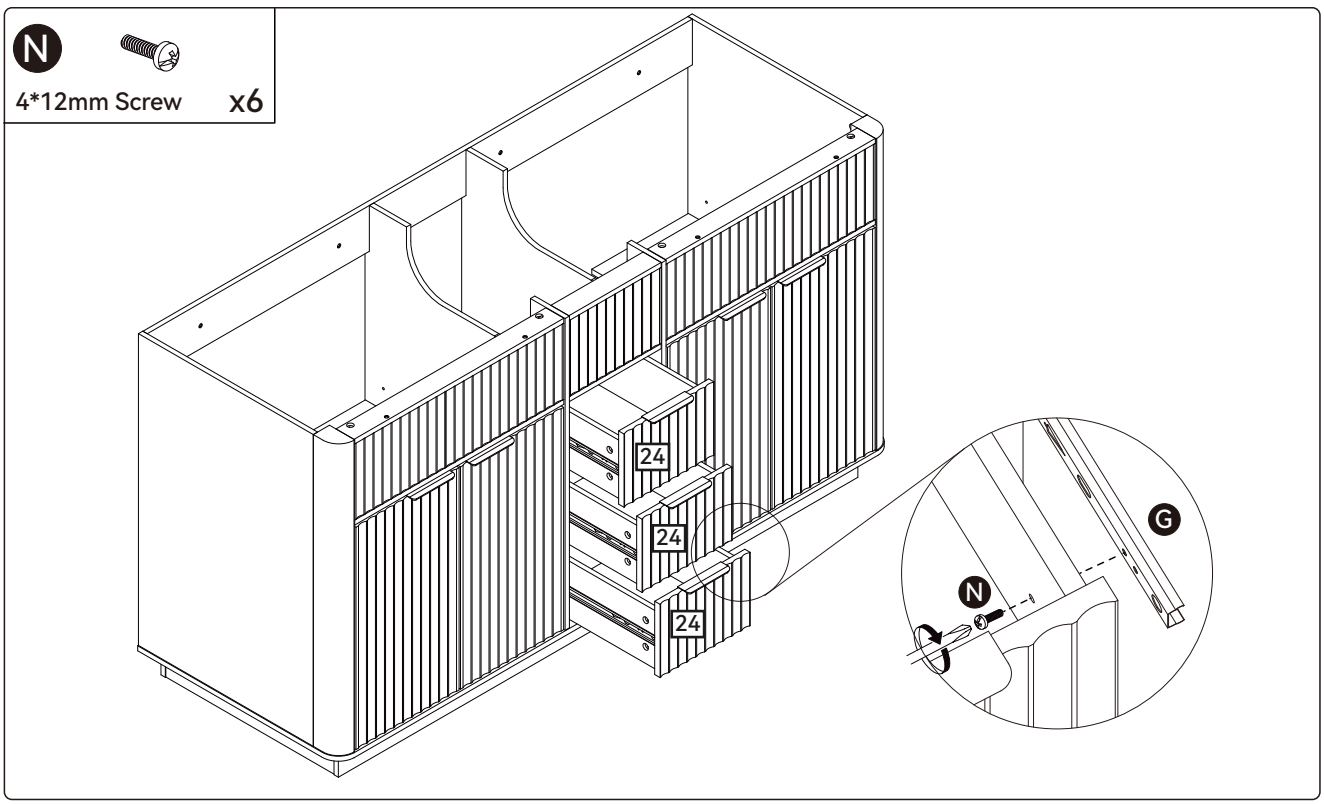

Use screw (N) to secure drawer slide (G) to the drawer.

Step 35



Wall Fixing Pack x4

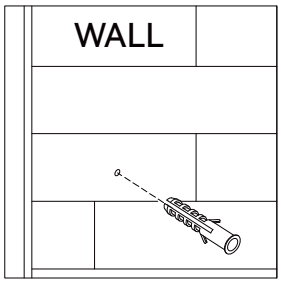

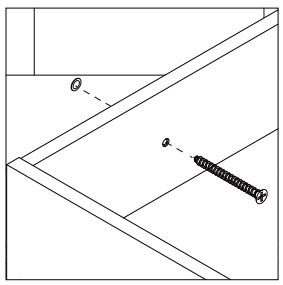

6

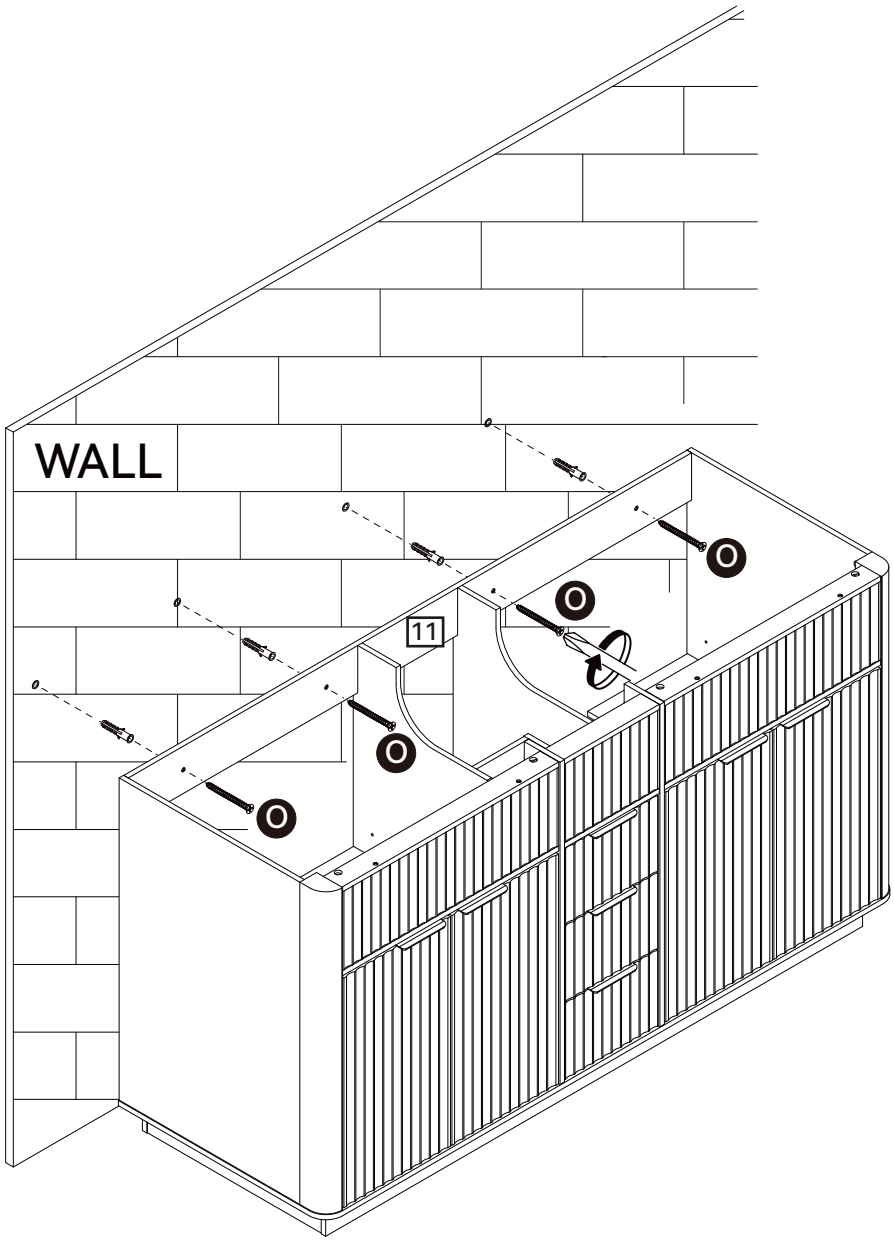

Step 36

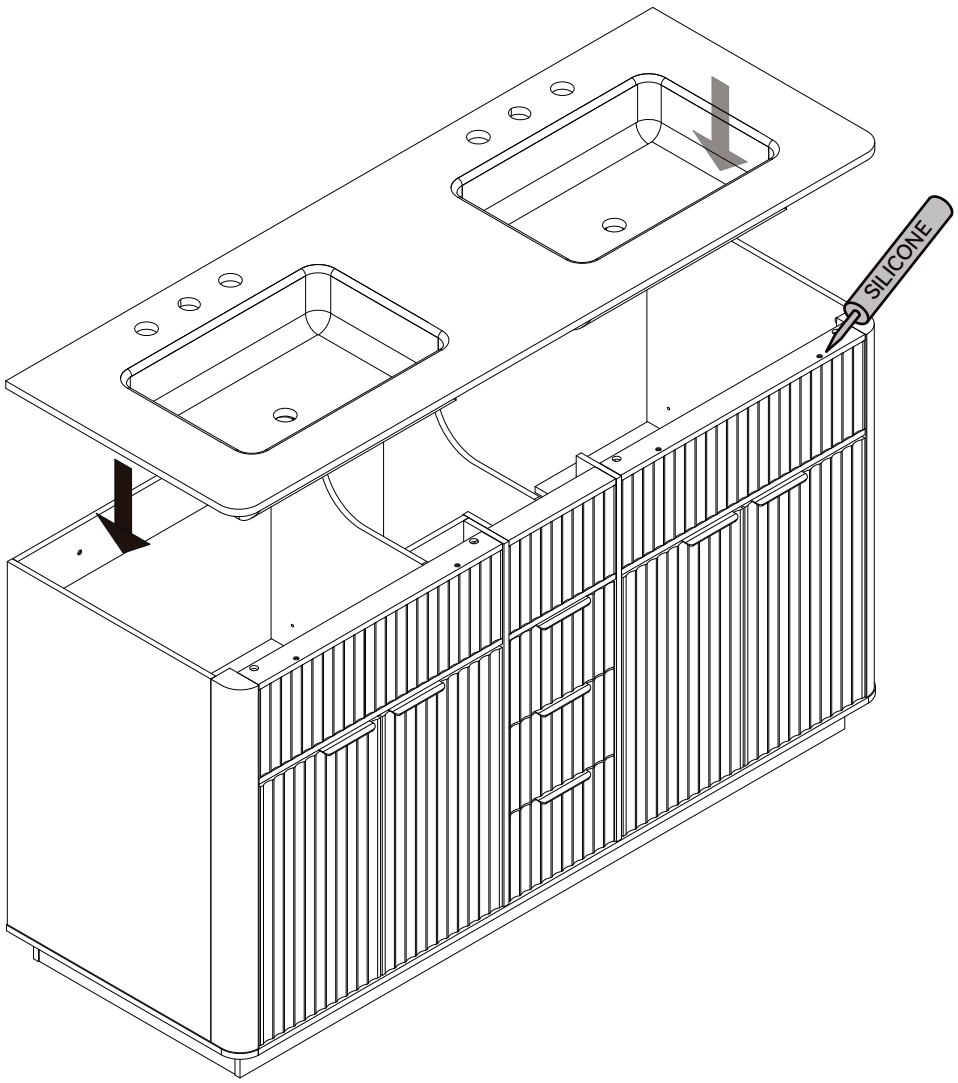

Apply a thin layer of silicone sealant around the top of the vanity, then carefully set the sink (P) in place.
Wipe off any excess silicone with a damp rag.