EICHHOLTZ®

ASSEMBLY **INSTRUCTION**

110000 MIRROR SENSATION GOLD FINISH

PARTS

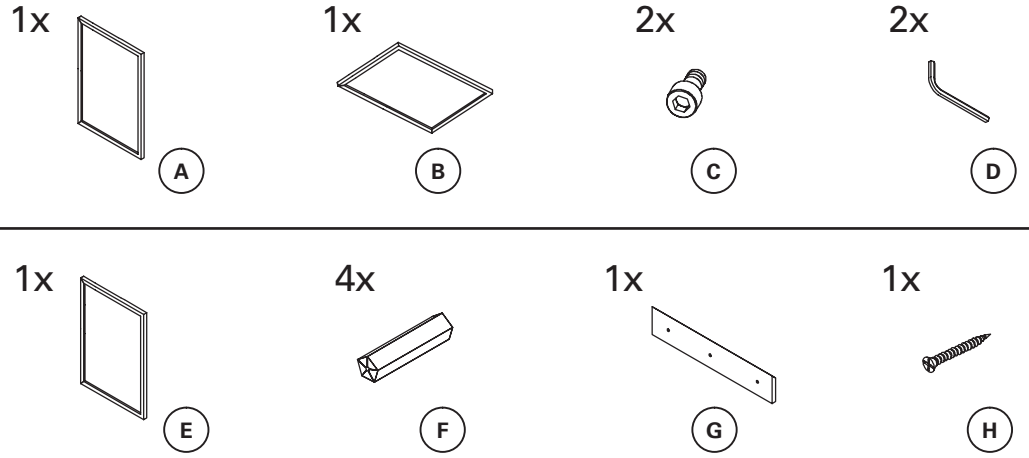

1

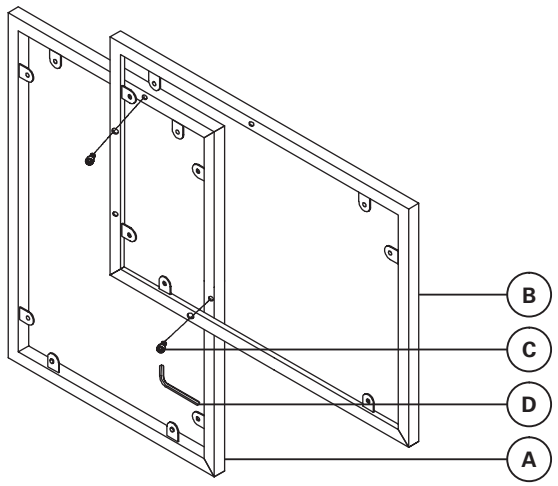

2

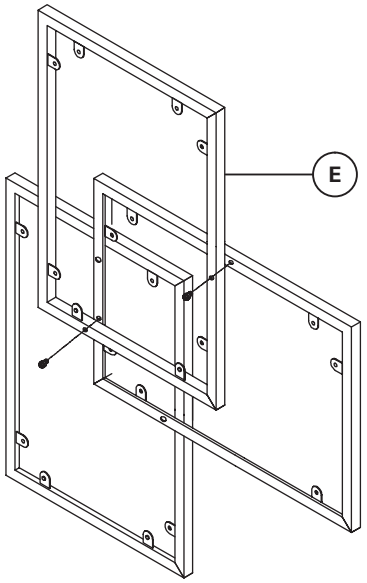

3

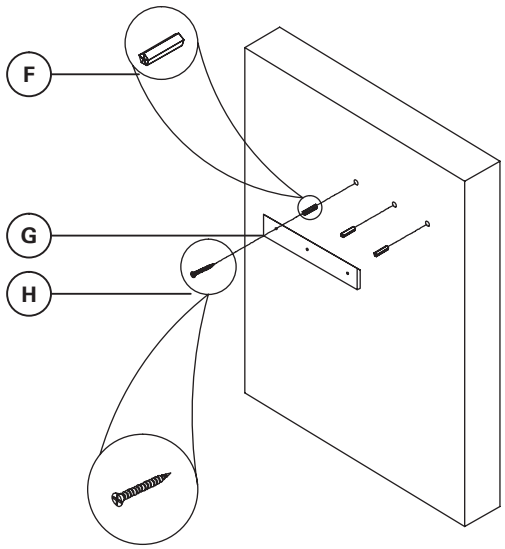
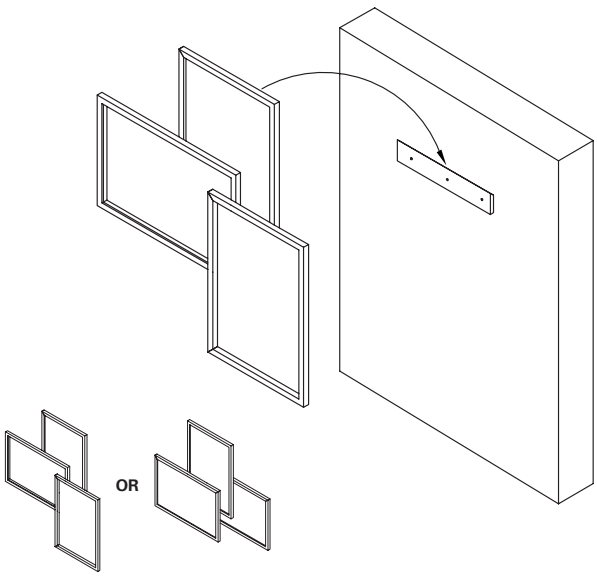
4