SERA BATHROOM DESIGNS

INSTALLATION INSTRUCTIONS

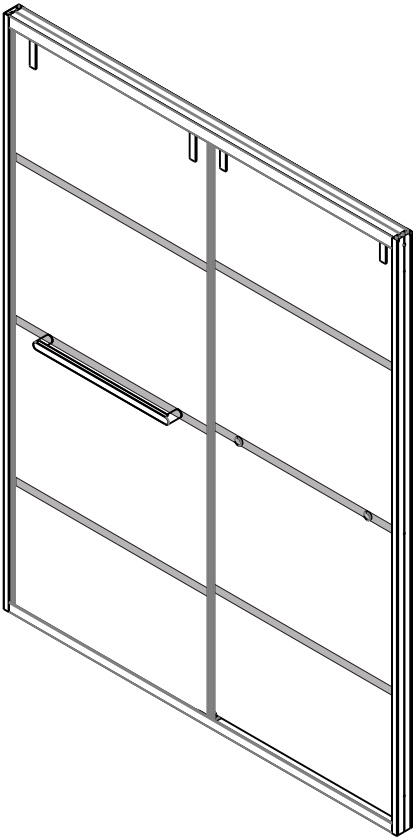

TIN4879MBSSD

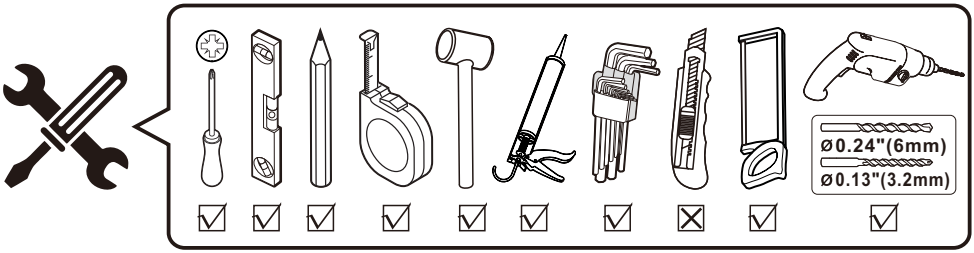
Ø0.24"(6mm)
Ø0.13"(3.2mm)

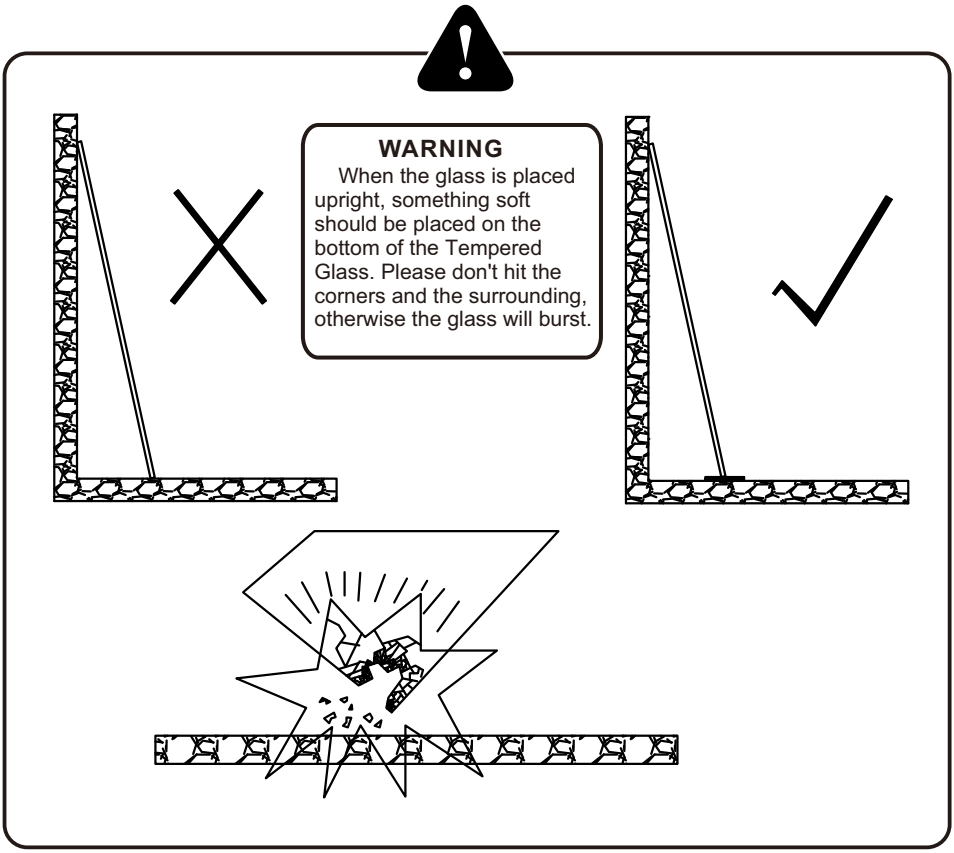
WARNING
When the glass is placed upright, something soft should be placed on the bottom of the Tempered Glass. Please don't hit the corners and the surrounding, otherwise the glass will burst.

Part list

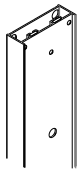

[01] x2

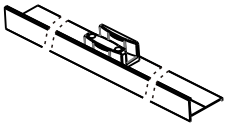

[02] x1

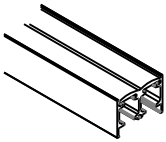

[03] x1

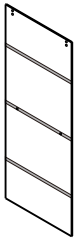

[04] x2

[05] x4

[06] x2

[07] x4

[08] x12

[09] x6

[10] x6

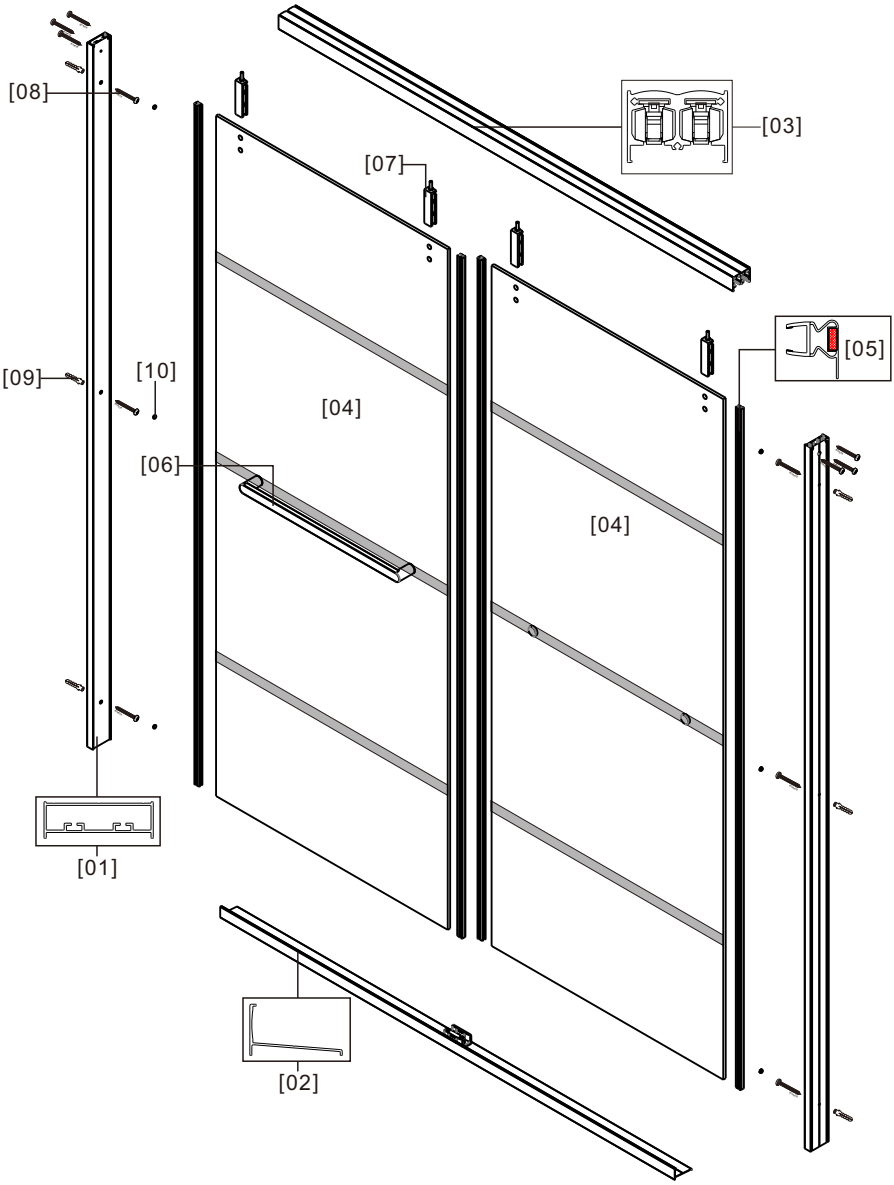
[08]
[03]
[07]
[05]
[09]
[10]
[04]
[06]
[04]
[01]
[02]

01

Size (mm)	L(mm)	
	Min	Max
1219	1119	1219
1524	1424	1524

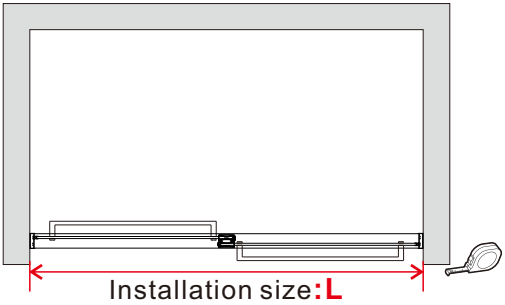

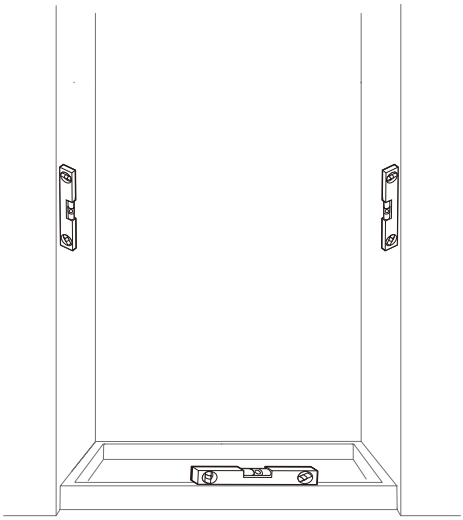

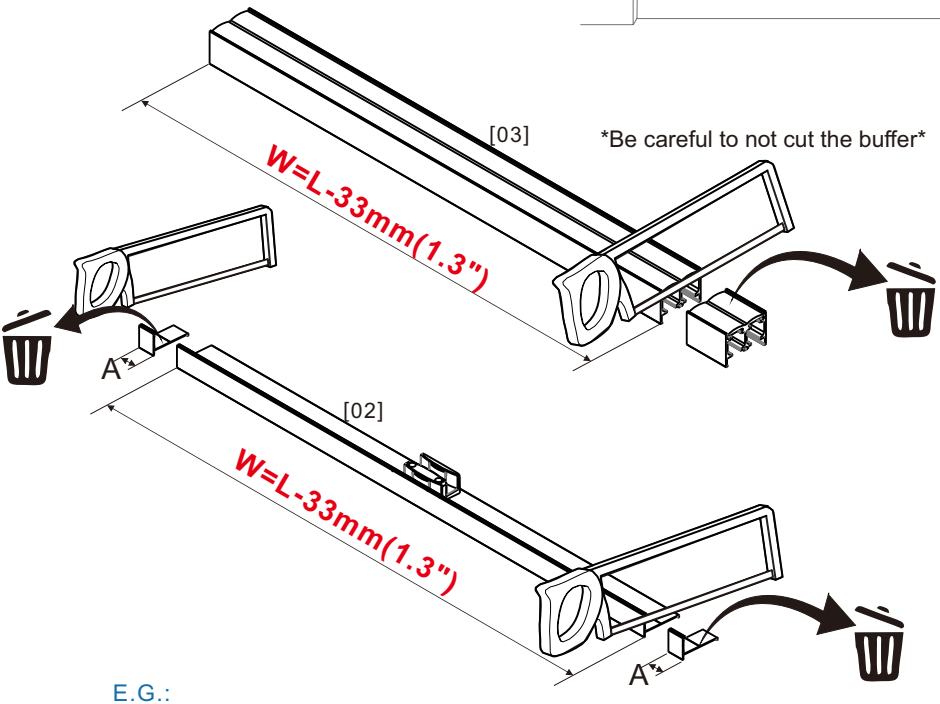

Be careful to not cut the buffer

E.G.:
L=1500mm(59")
W=1500mm(59")-33mm(1.3")=1467mm(57.8")

02

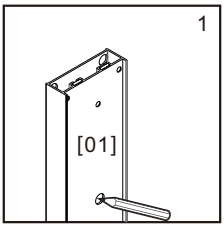

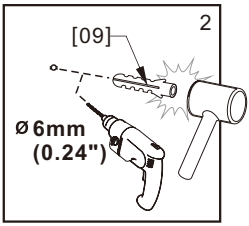

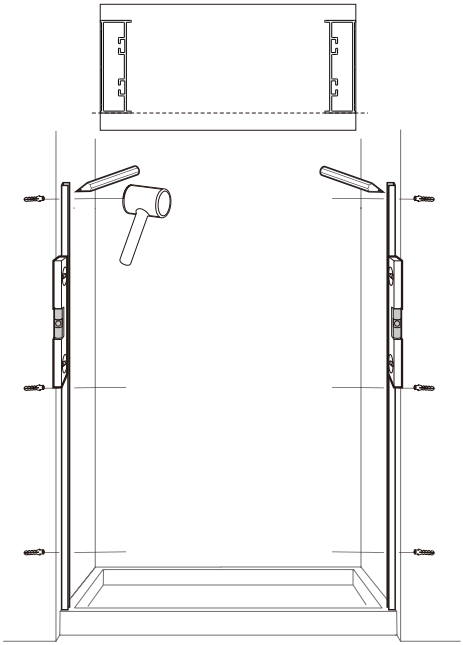

03

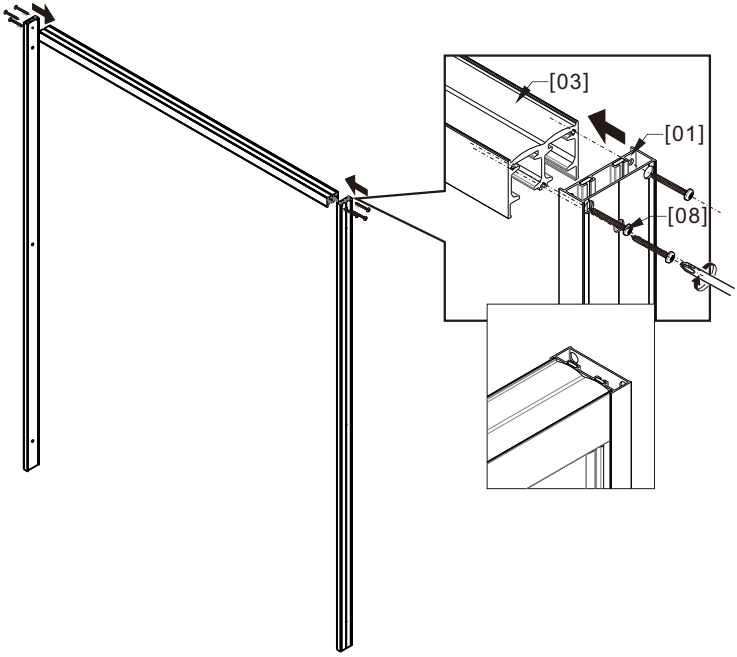

04

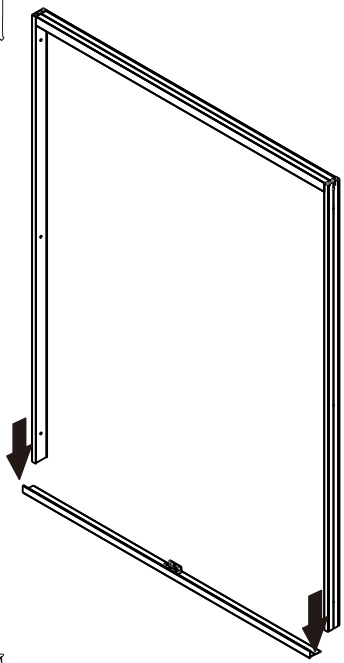

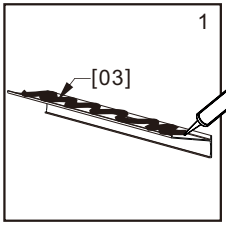

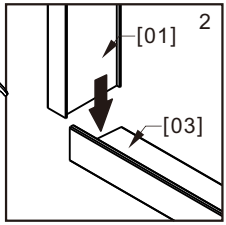

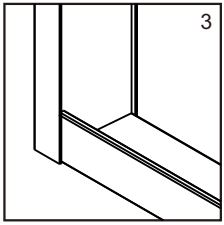

05

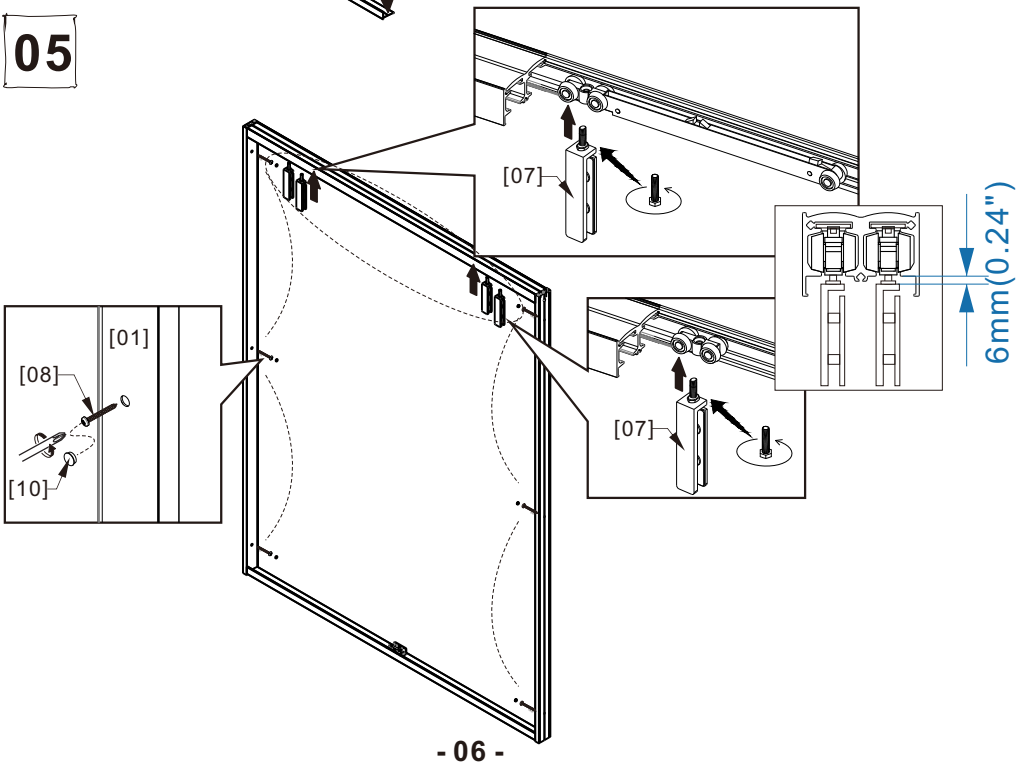

06

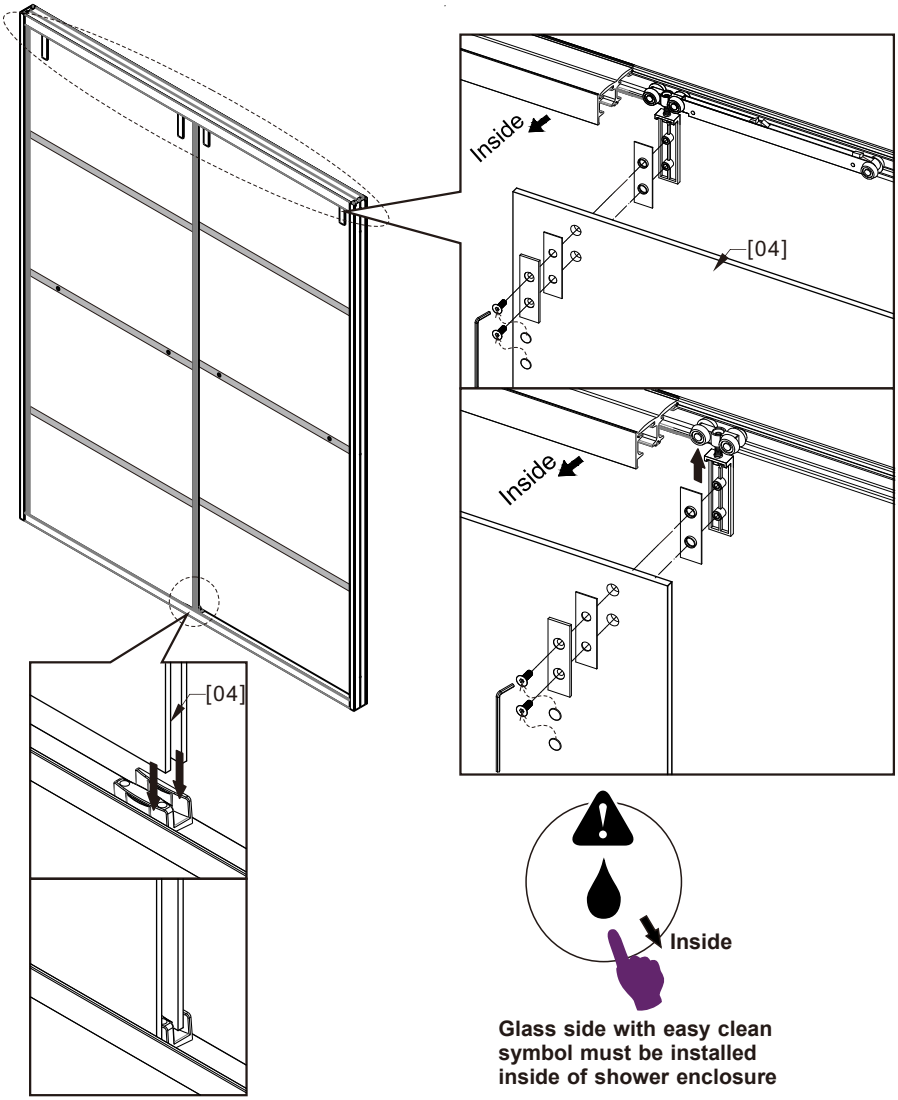

Glass side with easy clean symbol must be installed inside of shower enclosure

07

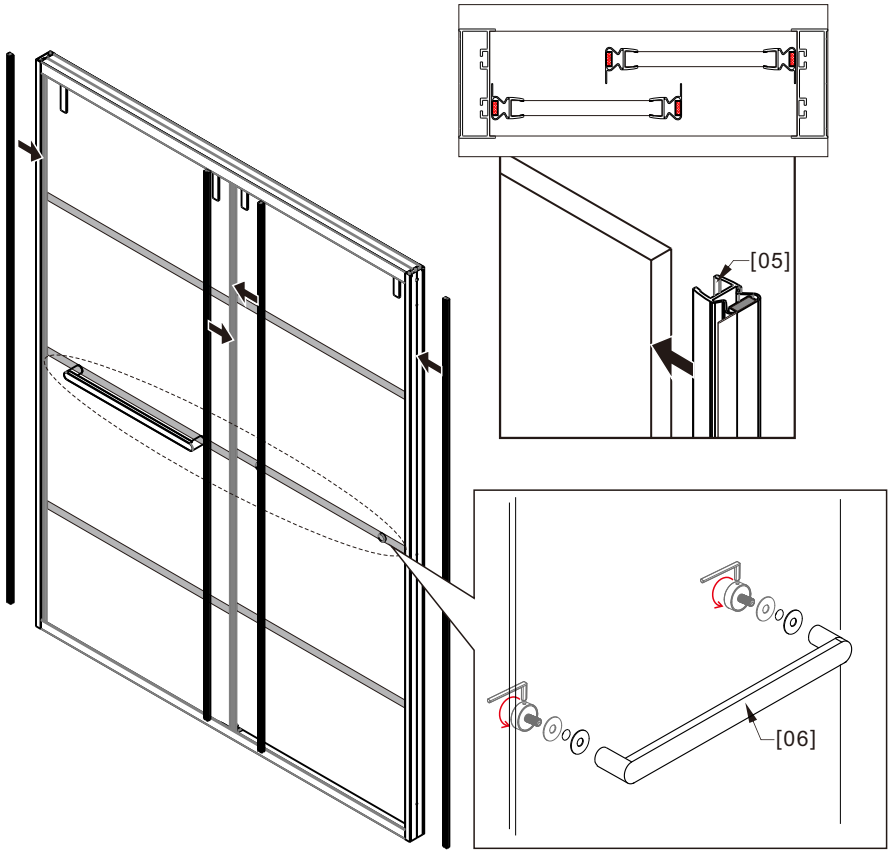

08

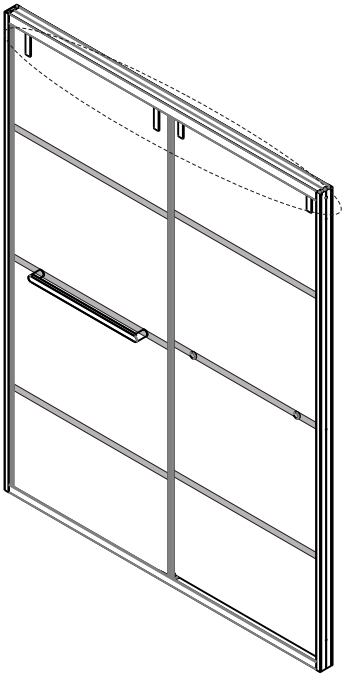

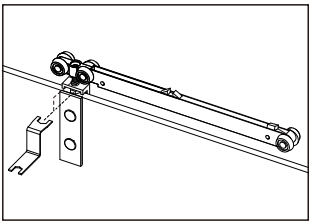

When adjusting, first lift the glass up, then use a wrench to turn the screw to adjust the height of the glass. This ensures a smooth sliding of the glass door and it properly fitting into the magnetic wall channel frame.

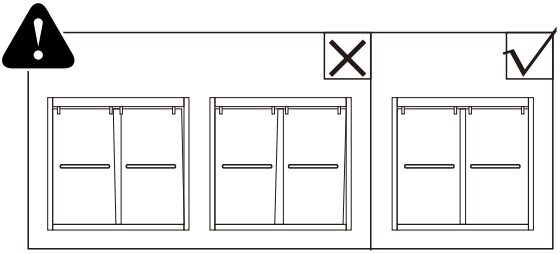

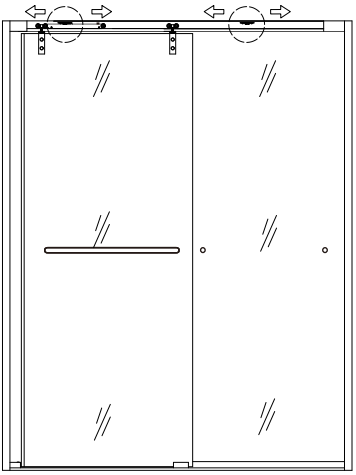

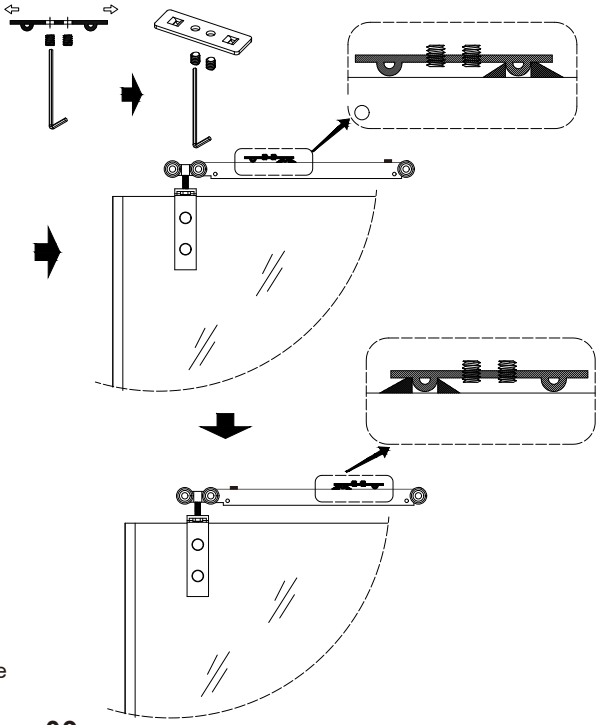

By loosening and tightening the screw of the positioning part of the buffer, it can be moved laterally to adjust the range of the buffer. Ensure that the door can now be soft closed optimally.
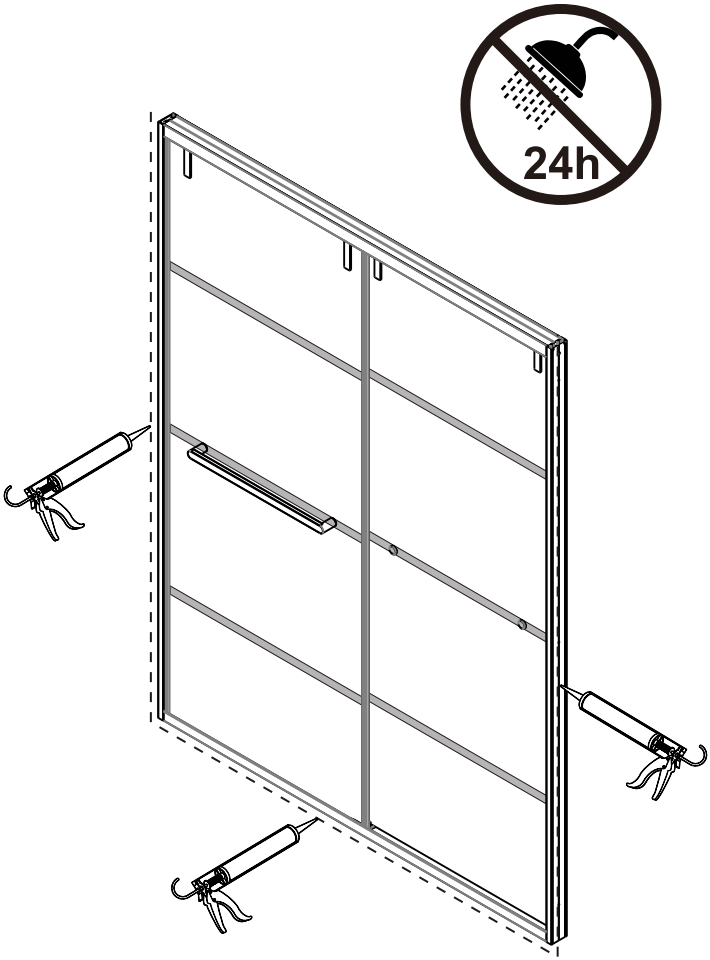
09