ASSEMBLY INSTRUCTIONS

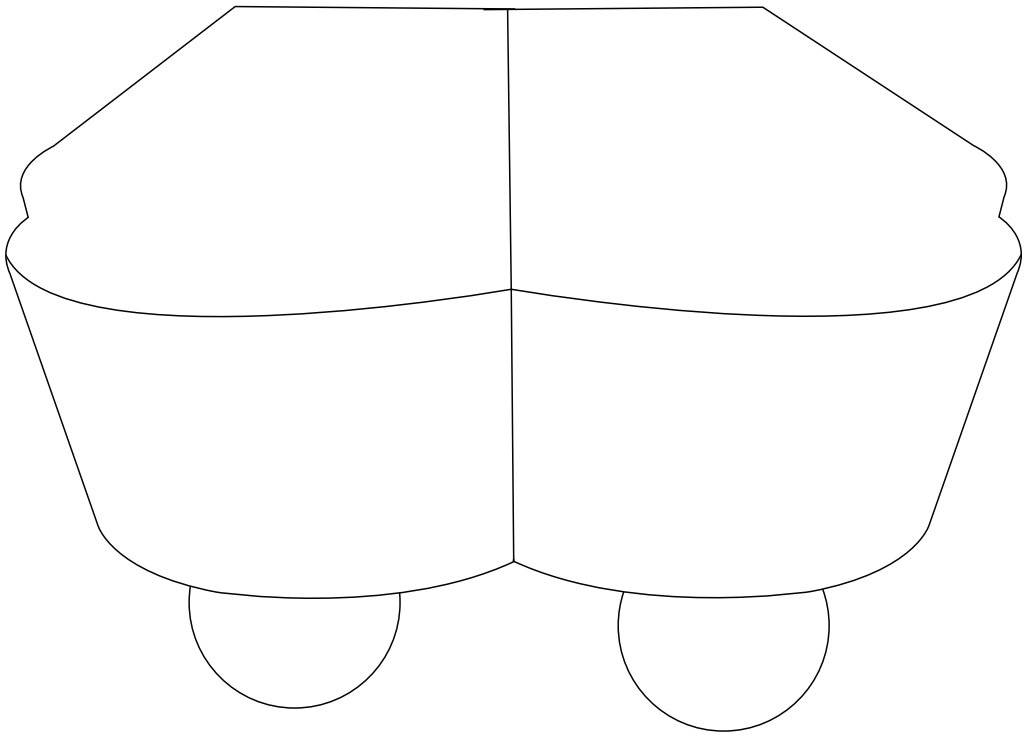

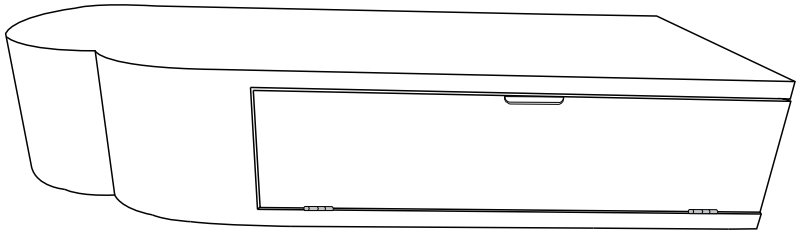

1

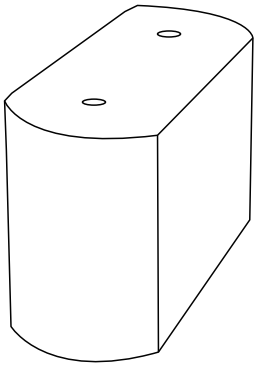

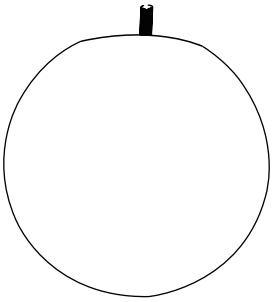

2

3

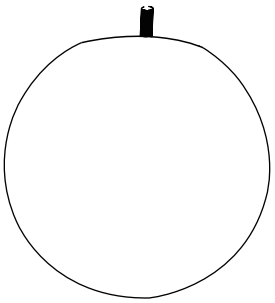

2

A	B	C	D
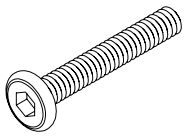 6pcs	 6pcs	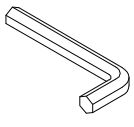 1PC	 8pcs

STEP 1

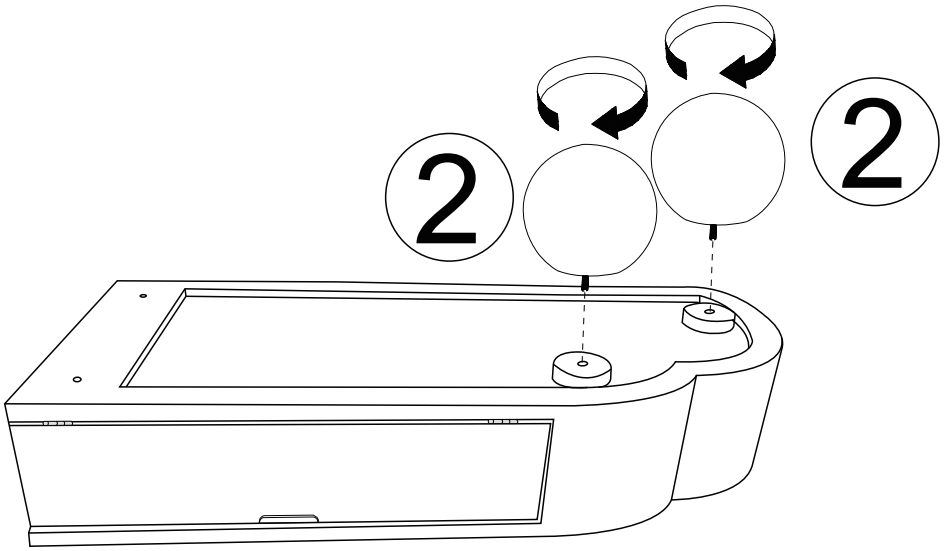

STEP 2

	AX2PCS
	BX2PCS
	CX1PC
	DX4PCS

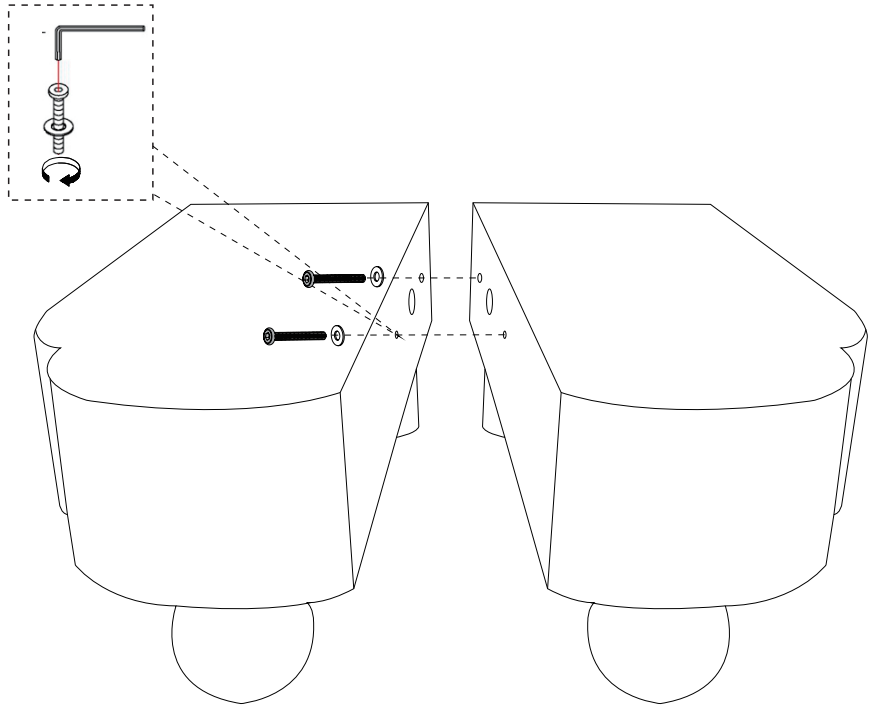

	AX2PCS
	BX2PCS
	CX1PC

