Description : Left Arm Loveseat ,w/1pwr
Pwr Recliner
Product Size : 62"L x 44"W x 42.5"H

Your furniture purchase is an investment. Here are a few tips to maximize the lifetime of your furniture with a minimum amount of effort. Properly caring for your furniture can help ensure that it looks grea t year after year.

Wood Furniture Maintenance:
- Always dust, wipe, and clean *with* the grain of the wood.
- Dust with a soft cloth. Dust will scratch the furniture surface if not removed properly.
- Use the same type of polish consistently as interchanging oil-based and wax-based polishes will cause a build-up and result in a foggy or cloudy appearance.
- If a polished surface becomes foggy, rub it with a cloth dipped in a solution of one tablespoon vinegar to one quart of water. Rub softly with the grain until the surface is completely dry.
- Soap and water are not advisable for wood surfaces. Water can penetrate the finish and raise the grain on wood, causing damage.
- Remember to change dusting cloths frequently as dirty cloths may scratch your furniture's surface.

The Enemies of Wood:
- Moisture is wood's worst enemy. Liquid spills should be gently wiped up immediately. Coasters should be used under all beverages.
- Do not allow rubber or vinyl materials to lie on the furniture. Chemicals in rubber may leave a stain. Put a strip of felt or leather under accessories that have rubber or vinyl.
- Heat creates a chemical change in the furniture's finish, which results in a white spot. Use protective pads under hot dishes, appliances, etc.
- Sunlight's ultraviolet rays can damage the finish of furniture. Do not place furniture directly against a heater or radiator and do not place in the path of hot streams of air from central heating. This will cause extreme localized drying of the wood.

High Gloss Resin Table Maintenance:
- Resin tabletops have approximately 1/8" of a resin coat on the top face of the table, which will resist ice, water, wine, liquor, food, cleaning fluids, and warm or hot liquids; however, cups, glasses, etc. containing hot liquids should not be left on the table without a coaster for protection.
- Resin tabletops will scratch just the same as any other glossy surface and basic precautions should be taken.
- For lasting shine, the resin table should be waxed with a car wax that does not contain silicon. Maintaining this wax build-up will result in a high gloss shine.
- When wiping down the table, a soft, clean rag should be used. Do not use a heavy paper.

Granite Top Maintenance:
The surface of the granite on your table has been polished or sealed to create a generally non-porous surface. The stone has many natural characteristics including: veining, hairline cracks, and color variations - which make up the stone's beauty.
To maintain the beauty of your granite:
- Protect surfaces from scratching, staining and etching by:
* Keeping them free of debris or sharp objects
* Wiping up spills immediately
* Avoiding contact with chemicals (particularly acid-based materials)
- Clean with pH neutral products or those especially formulated for use on stone.
- It is not recommended to use a water-based solvent for dark granite as it will remove the polish from the surface.
- After a period of use, apply a penetrating sealer to prevent contaminants from being absorbed into the stone.
- Remove stains with special absorbent poultices formulated for use on stone.
- Renew the surface on *polished* granite (granite with a high gloss surface) by buffing with special stone polish, powder or cream.
Do not use granite polish on granite with a matte finish, which has been honed rather than polished. (Penetrating sealer may be used on both polished and honed granite.)

Marble Top Maintenance:
Marble may be stone, but it is porous stone and can stain easily. Treating marble surfaces the same as wood surfaces is a great rule of thumb.
- It is recommended to seal the tops on a regular basis (every 6 to 12 months). A good quality stone sealer can be purchased from any tiles/stone store or any homecare store and should be applied according to the manufacturer's recommendation.
- When sealed properly, marble tops can be used indoors and outdoors and can withstand any weather conditions except internal freezing. Snow or freezing rain will penetrate the table and cause cracks.

Caring for the Fabric on Upholstered Furniture:
- Frequent vacuuming of the entire upholstered area will prevent dust from settling into the fibers.
- Professional cleaning is always recommended for all upholstered pieces.
- Always pre-test a small area of fabric in an inconspicuous area when cleaning before proceeding.
- Do not use cleaning products containing brightening agents.

ASSEMBLY INSTRUCTIONS

Place the Backrest (B,C) to the Recliner Loveseat Assembly(A), align with the metal brackets on each piece, then slowly lower the backrest until the metal brackets snap into the locked position side to the Loveseat Assembly (A).
Then connect Transformer (D) with Power Cord (E) as shown.
Assembly product is now completed.

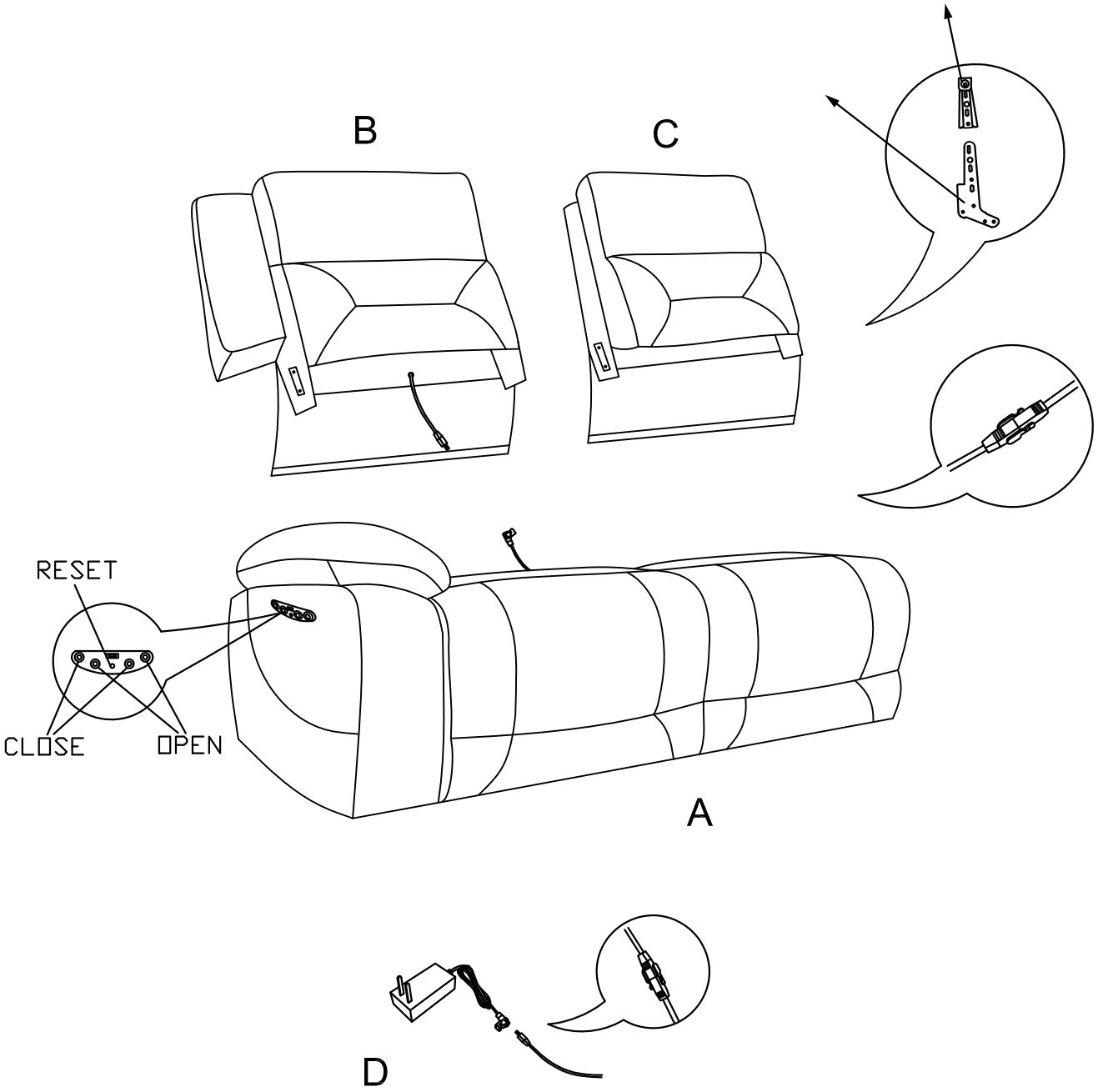

PARTS LIST

A RECLINER LOVESEAT ASSEMBLY (1 PC)

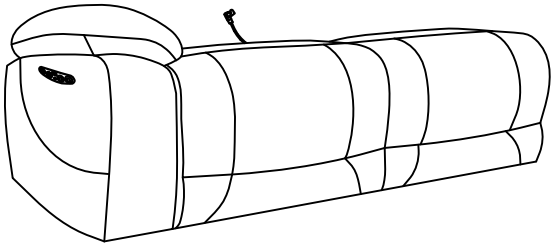

B LEFT BACKREST (1 PC)

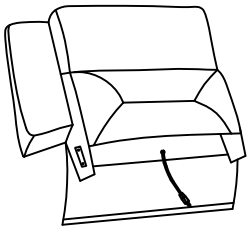

C RIGHT BACKREST (1 PC)

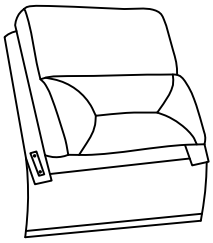

D TRANSFORMER (1 PC)

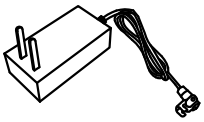

COMPLETLY RECLINER LOVESEAT

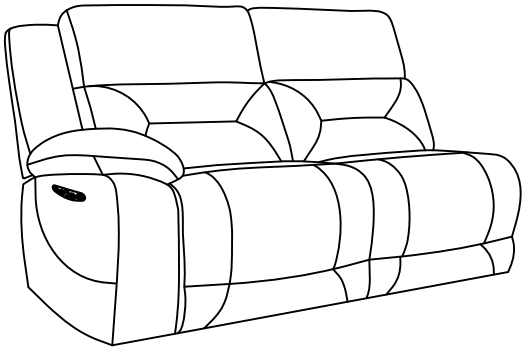

PRODUCT DETAILS	
Product Size	62"L x 44"W x 42.5"H
Carton Size	62"L x 34"W x29.5"H
Net Weight	137.3 Lbs
Gross Weight	150.5 Lbs
Cuft	40'

FABRIC CONTENT: POLYESTER

This fabric is not machine washable.
Allow +/- 3% residual shrinkage.
Do not use cleaning products containing brightening agents.

STEVE SILVER CO.

Description : Right Arm Loveseat w/Console
2 Pwr-Pwr Recliner

Product Size : 75"L x 44"W x 42.5"H

Your furniture purchase is an investment. Here are a few tips to maximize the lifetime of your furniture with a minimum amount of effort. Properly caring for your furniture can help ensure that it looks grea t year after year.

Wood Furniture Maintenance:
- Always dust, wipe, and clean *with* the grain of the wood.
- Dust with a soft cloth. Dust will scratch the furniture surface if not removed properly.
- Use the same type of polish consistently as interchanging oil-based and wax-based polishes will cause a build-up and result in a foggy or cloudy appearance.
- If a polished surface becomes foggy, rub it with a cloth dipped in a solution of one tablespoon vinegar to one quart of water. Rub softly with the grain until the surface is completely dry.
- Soap and water are not advisable for wood surfaces. Water can penetrate the finish and raise the grain on wood, causing damage.
- Remember to change dusting cloths frequently as dirty cloths may scratch your furniture's surface.

The Enemies of Wood:
- Moisture is wood's worst enemy. Liquid spills should be gently wiped up immediately. Coasters should be used under all beverages.
- Do not allow rubber or vinyl materials to lie on the furniture. Chemicals in rubber may leave a stain. Put a strip of felt or leather under accessories that have rubber or vinyl.
- Heat creates a chemical change in the furniture's finish, which results in a white spot. Use protective pads under hot dishes, appliances, etc.
- Sunlight's ultraviolet rays can damage the finish of furniture. Do not place furniture directly against a heater or radiator and do not place in the path of hot streams of air from central heating. This will cause extreme localized drying of the wood.

High Gloss Resin Table Maintenance:
- Resin tabletops have approximately 1/8" of a resin coat on the top face of the table, which will resist ice, water, wine, liquor, food, cleaning fluids, and warm or hot liquids; however, cups, glasses, etc. containing hot liquids should not be left on the table without a coaster for protection.
- Resin tabletops will scratch just the same as any other glossy surface and basic precautions should be taken.
- For lasting shine, the resin table should be waxed with a car wax that does not contain silicon. Maintaining this wax build-up will result in a high gloss shine.
- When wiping down the table, a soft, clean rag should be used. Do not use a heavy paper.

Granite Top Maintenance:
The surface of the granite on your table has been polished or sealed to create a generally non-porous surface. The stone has many natural characteristics including: veining, hairline cracks, and color variations - which make up the stone's beauty.
To maintain the beauty of your granite:
- Protect surfaces from scratching, staining and etching by:
* Keeping them free of debris or sharp objects
* Wiping up spills immediately
* Avoiding contact with chemicals (particularly acid-based materials)
- Clean with pH neutral products or those especially formulated for use on stone.
- It is not recommended to use a water-based solvent for dark granite as it will remove the polish from the surface.
- After a period of use, apply a penetrating sealer to prevent contaminants from being absorbed into the stone.
- Remove stains with special absorbent poultices formulated for use on stone.
- Renew the surface on *polished* granite (granite with a high gloss surface) by buffing with special stone polish, powder or cream.
Do not use granite polish on granite with a matte finish, which has been honed rather than polished. (Penetrating sealer may be used on both polished and honed granite.)

Marble Top Maintenance:
Marble may be stone, but it is porous stone and can stain easily. Treating marble surfaces the same as wood surfaces is a great rule of thumb.
- It is recommended to seal the tops on a regular basis (every 6 to 12 months). A good quality stone sealer can be purchased from any tiles/stone store or any homecare store and should be applied according to the manufacturer's recommendation.
- When sealed properly, marble tops can be used indoors and outdoors and can withstand any weather conditions except internal freezing. Snow or freezing rain will penetrate the table and cause cracks.

Caring for the Fabric on Upholstered Furniture:
- Frequent vacuuming of the entire upholstered area will prevent dust from settling into the fibers.
- Professional cleaning is always recommended for all upholstered pieces.
- Always pre-test a small area of fabric in an inconspicuous area when cleaning before proceeding.
- Do not use cleaning products containing brightening agents.

ASSEMBLY INSTRUCTIONS

Place the Left/Right Backrest (B,C) to the Recliner Loveseat Assembly (A),align with the metal brackets on each piece, then slowly lower the backrest until the metal brackets snap into the locked position side to the Recliner Loveseat Assembly (A).
Install the Console Backrest (D) to the Recliner Loveseat Assembly(A) by using Screw (1) and Flat Washer(2).
Then connect Transformer (E) with Power Cord (F) as shown.
Assembly product is now completed.

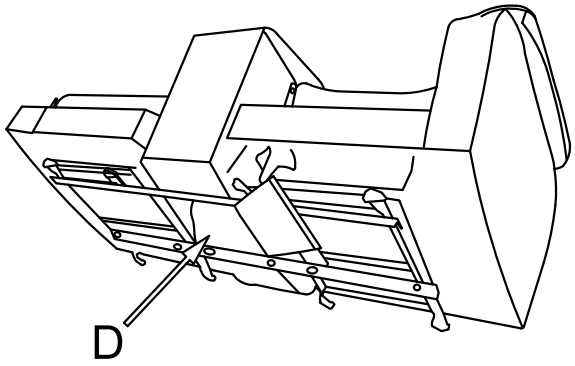

the location of
the console backrest

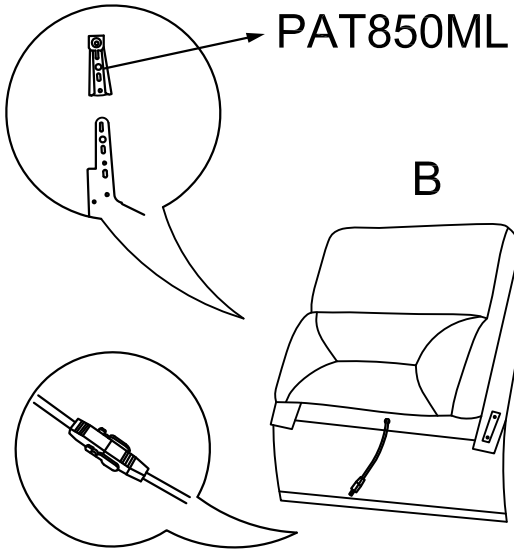

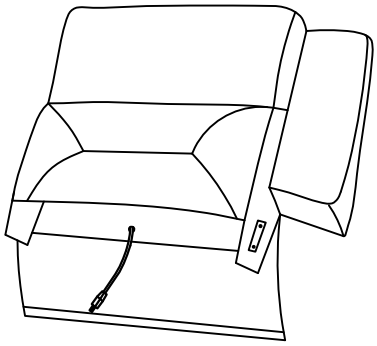

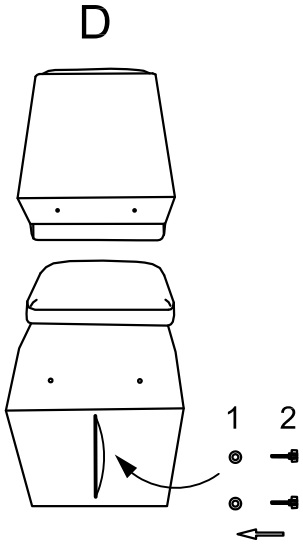

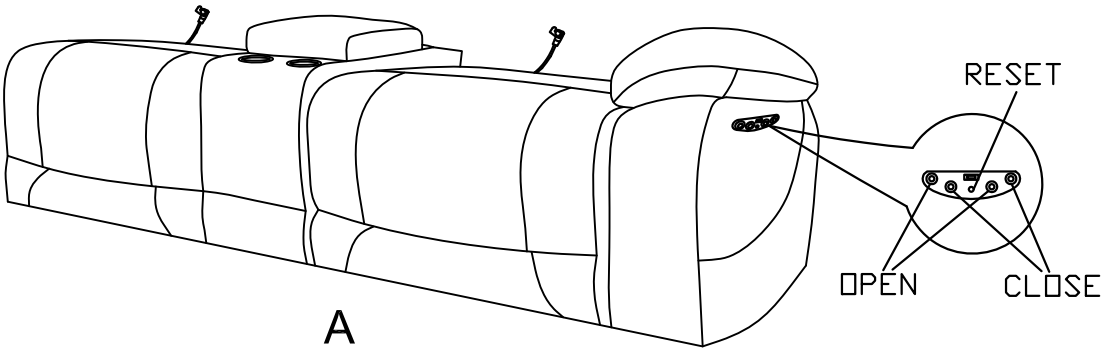

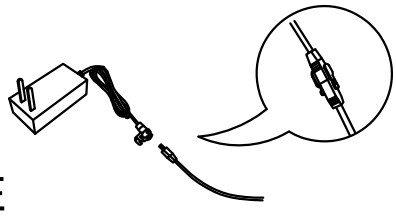

PARTS LIST

A RECLINER LOVESEAT ASSEMBLY (1 PC) 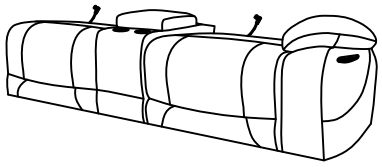	B LEFT BACKREST (1 PC) 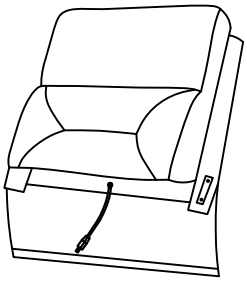	C RIGHT BACKREST (1 PC) 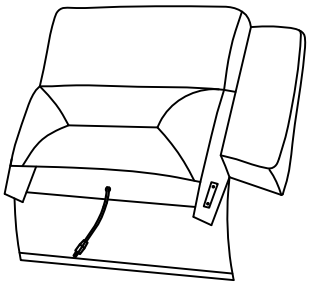
D CONSOLE BACKREST (1 PC) 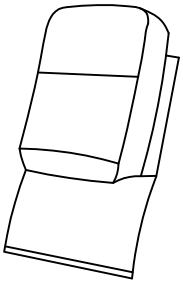	E TRANSFORMER (1 PC) 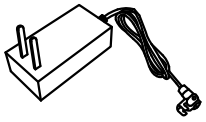	

HARDWARE PACK

1		IRON SCREW	Φ6 x 50 mm	2 PCS
2		PLASTIC FALT WASHER	Φ8 x 20 mm	2 PCS

MADE IN CHINA

Complete Hardware

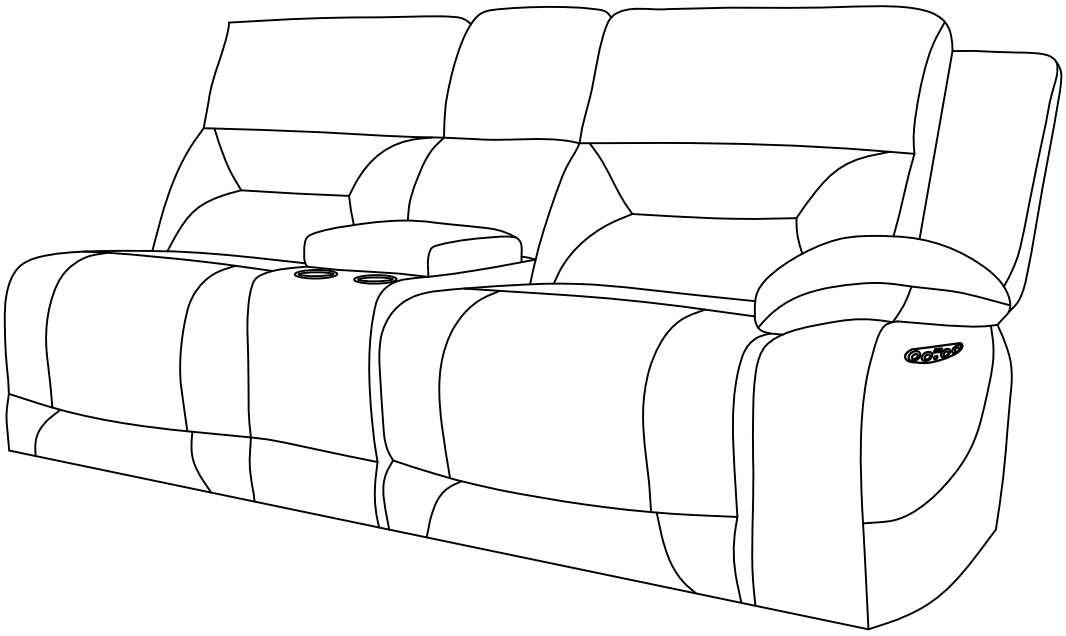

PRODUCT DETAILS	
Product Size	75"L x 44"W x 42.5"H
Carton Size	75.5"L x 34"W x29.5"H
Net Weight	207.4 Lbs
Gross Weight	227.2 Lbs
Cuft	44'

FABRIC CONTENT: POLYESTER

This fabric is not machine washable.
Allow +/- 3% residual shrinkage.
Do not use cleaning products containing brightening agents.

Description : Wedge
Product Size : 73"L x 47"W x 42.5"H

Your furniture purchase is an investment. Here are a few tips to maximize the lifetime of your furniture with a minimum amount of effort. Properly caring for your furniture can help ensure that it looks grea t year after year.

Wood Furniture Maintenance:
- Always dust, wipe, and clean *with* the grain of the wood.
- Dust with a soft cloth. Dust will scratch the furniture surface if not removed properly.
- Use the same type of polish consistently as interchanging oil-based and wax-based polishes will cause a build-up and result in a foggy or cloudy appearance.
- If a polished surface becomes foggy, rub it with a cloth dipped in a solution of one tablespoon vinegar to one quart of water. Rub softly with the grain until the surface is completely dry.
- Soap and water are not advisable for wood surfaces. Water can penetrate the finish and raise the grain on wood, causing damage.
- Remember to change dusting cloths frequently as dirty cloths may scratch your furniture's surface.

The Enemies of Wood:
- Moisture is wood's worst enemy. Liquid spills should be gently wiped up immediately. Coasters should be used under all beverages.
- Do not allow rubber or vinyl materials to lie on the furniture. Chemicals in rubber may leave a stain. Put a strip of felt or leather under accessories that have rubber or vinyl.
- Heat creates a chemical change in the furniture's finish, which results in a white spot. Use protective pads under hot dishes, appliances, etc.
- Sunlight's ultraviolet rays can damage the finish of furniture. Do not place furniture directly against a heater or radiator and do not place in the path of hot streams of air from central heating. This will cause extreme localized drying of the wood.

High Gloss Resin Table Maintenance:
- Resin tabletops have approximately 1/8" of a resin coat on the top face of the table, which will resist ice, water, wine, liquor, food, cleaning fluids, and warm or hot liquids; however, cups, glasses, etc. containing hot liquids should not be left on the table without a coaster for protection.
- Resin tabletops will scratch just the same as any other glossy surface and basic precautions should be taken.
- For lasting shine, the resin table should be waxed with a car wax that does not contain silicon. Maintaining this wax build-up will result in a high gloss shine.
- When wiping down the table, a soft, clean rag should be used. Do not use a heavy paper.

Granite Top Maintenance:
The surface of the granite on your table has been polished or sealed to create a generally non-porous surface. The stone has many natural characteristics including: veining, hairline cracks, and color variations - which make up the stone's beauty.
To maintain the beauty of your granite:
- Protect surfaces from scratching, staining and etching by:
* Keeping them free of debris or sharp objects
* Wiping up spills immediately
* Avoiding contact with chemicals (particularly acid-based materials)
- Clean with pH neutral products or those especially formulated for use on stone.
- It is not recommended to use a water-based solvent for dark granite as it will remove the polish from the surface.
- After a period of use, apply a penetrating sealer to prevent contaminants from being absorbed into the stone.
- Remove stains with special absorbent poultices formulated for use on stone.
- Renew the surface on *polished* granite (granite with a high gloss surface) by buffing with special stone polish, powder or cream.
Do not use granite polish on granite with a matte finish, which has been honed rather than polished. (Penetrating sealer may be used on both polished and honed granite.)

Marble Top Maintenance:
Marble may be stone, but it is porous stone and can stain easily. Treating marble surfaces the same as wood surfaces is a great rule of thumb.
- It is recommended to seal the tops on a regular basis (every 6 to 12 months). A good quality stone sealer can be purchased from any tiles/stone store or any homecare store and should be applied according to the manufacturer's recommendation.
- When sealed properly, marble tops can be used indoors and outdoors and can withstand any weather conditions except internal freezing. Snow or freezing rain will penetrate the table and cause cracks.

Caring for the Fabric on Upholstered Furniture:
- Frequent vacuuming of the entire upholstered area will prevent dust from settling into the fibers.
- Professional cleaning is always recommended for all upholstered pieces.
- Always pre-test a small area of fabric in an inconspicuous area when cleaning before proceeding.
- Do not use cleaning products containing brightening agents.

ASSEMBLY INSTRUCTIONS

Place the Left/Right Backrest (B,C) to the Wedge Assembly (A), align with the metal brackets on each piece, then slowly lower the backrest until the metal brackets snap into the locked position side to the Wedge Assembly (A).
Assembly product is now completed.

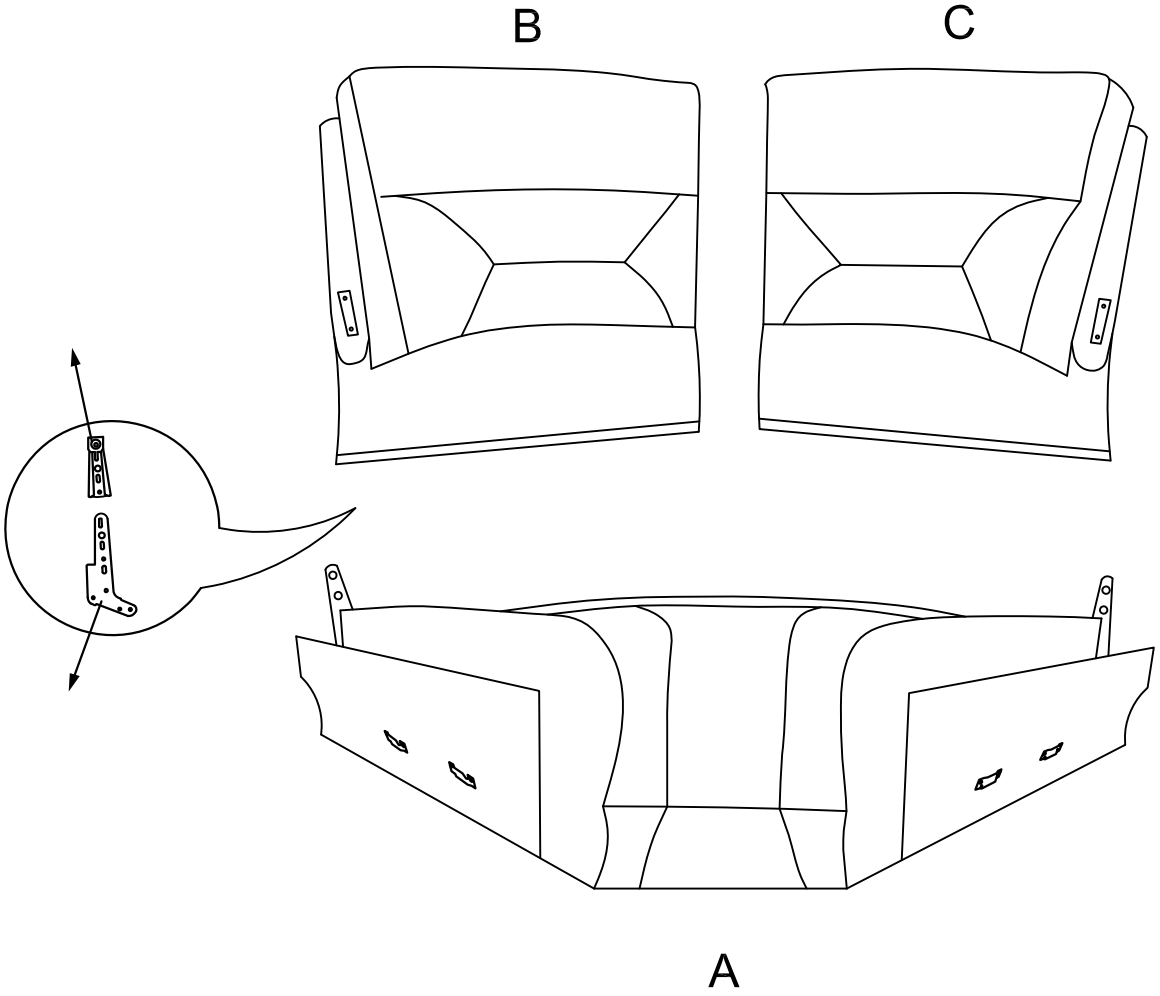

PARTS LIST

A	B	C
WEDGE ASSEMBLY (1 PC)	LEFT BACKREST (1 PC)	RIGHT BACKREST (1 PC)

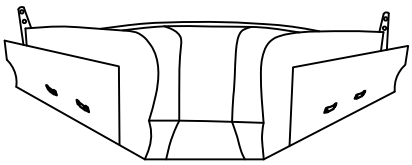

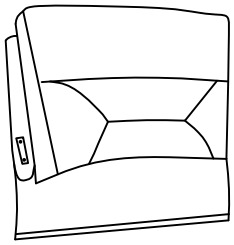

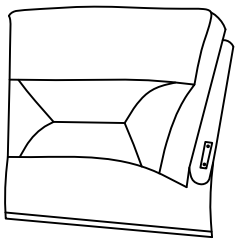

COMPLETLY WEDGE

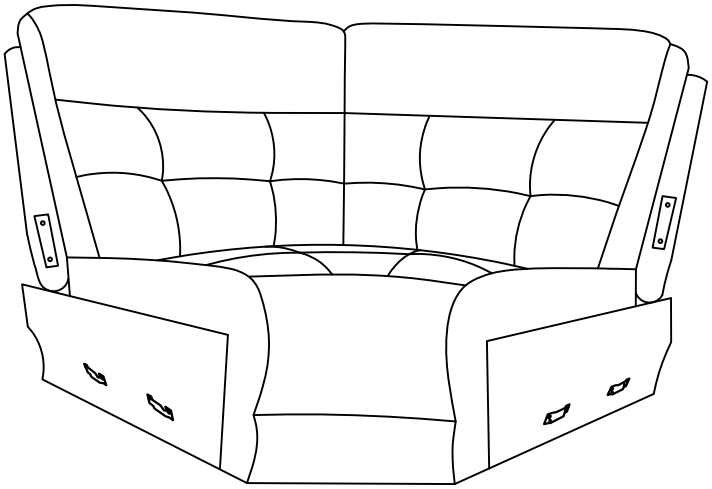

PRODUCT DETAILS	
Product Size	73"L x 47"W x 42.5"H
Carton Size	64"L x 38"W x29.5"H
Net Weight	75.3 Lbs
Gross Weight	88.5 Lbs
Cuft	41.5'

FABRIC CONTENT: POLYESTER

This fabric is not machine washable.
Allow +/- 3% residual shrinkage.
Do not use cleaning products containing brightening agents.

Description : Left Arm Loveseat ,w/1pwr
Pwr Recliner
Product Size : 62"L x 44"W x 42.5"H

Your furniture purchase is an investment. Here are a few tips to maximize the lifetime of your furniture with a minimum amount of effort. Properly caring for your furniture can help ensure that it looks grea t year after year.

Wood Furniture Maintenance:
- Always dust, wipe, and clean *with* the grain of the wood.
- Dust with a soft cloth. Dust will scratch the furniture surface if not removed properly.
- Use the same type of polish consistently as interchanging oil-based and wax-based polishes will cause a build-up and result in a foggy or cloudy appearance.
- If a polished surface becomes foggy, rub it with a cloth dipped in a solution of one tablespoon vinegar to one quart of water. Rub softly with the grain until the surface is completely dry.
- Soap and water are not advisable for wood surfaces. Water can penetrate the finish and raise the grain on wood, causing damage.
- Remember to change dusting cloths frequently as dirty cloths may scratch your furniture's surface.

The Enemies of Wood:
- Moisture is wood's worst enemy. Liquid spills should be gently wiped up immediately. Coasters should be used under all beverages.
- Do not allow rubber or vinyl materials to lie on the furniture. Chemicals in rubber may leave a stain. Put a strip of felt or leather under accessories that have rubber or vinyl.
- Heat creates a chemical change in the furniture's finish, which results in a white spot. Use protective pads under hot dishes, appliances, etc.
- Sunlight's ultraviolet rays can damage the finish of furniture. Do not place furniture directly against a heater or radiator and do not place in the path of hot streams of air from central heating. This will cause extreme localized drying of the wood.

High Gloss Resin Table Maintenance:
- Resin tabletops have approximately 1/8" of a resin coat on the top face of the table, which will resist ice, water, wine, liquor, food, cleaning fluids, and warm or hot liquids; however, cups, glasses, etc. containing hot liquids should not be left on the table without a coaster for protection.
- Resin tabletops will scratch just the same as any other glossy surface and basic precautions should be taken.
- For lasting shine, the resin table should be waxed with a car wax that does not contain silicon. Maintaining this wax build-up will result in a high gloss shine.
- When wiping down the table, a soft, clean rag should be used. Do not use a heavy paper.

Granite Top Maintenance:
The surface of the granite on your table has been polished or sealed to create a generally non-porous surface. The stone has many natural characteristics including: veining, hairline cracks, and color variations - which make up the stone's beauty.
To maintain the beauty of your granite:
- Protect surfaces from scratching, staining and etching by:
* Keeping them free of debris or sharp objects
* Wiping up spills immediately
* Avoiding contact with chemicals (particularly acid-based materials)
- Clean with pH neutral products or those especially formulated for use on stone.
- It is not recommended to use a water-based solvent for dark granite as it will remove the polish from the surface.
- After a period of use, apply a penetrating sealer to prevent contaminants from being absorbed into the stone.
- Remove stains with special absorbent poultices formulated for use on stone.
- Renew the surface on *polished* granite (granite with a high gloss surface) by buffing with special stone polish, powder or cream.
Do not use granite polish on granite with a matte finish, which has been honed rather than polished. (Penetrating sealer may be used on both polished and honed granite.)

Marble Top Maintenance:
Marble may be stone, but it is porous stone and can stain easily. Treating marble surfaces the same as wood surfaces is a great rule of thumb.
- It is recommended to seal the tops on a regular basis (every 6 to 12 months). A good quality stone sealer can be purchased from any tiles/stone store or any homecare store and should be applied according to the manufacturer's recommendation.
- When sealed properly, marble tops can be used indoors and outdoors and can withstand any weather conditions except internal freezing. Snow or freezing rain will penetrate the table and cause cracks.

Caring for the Fabric on Upholstered Furniture:
- Frequent vacuuming of the entire upholstered area will prevent dust from settling into the fibers.
- Professional cleaning is always recommended for all upholstered pieces.
- Always pre-test a small area of fabric in an inconspicuous area when cleaning before proceeding.
- Do not use cleaning products containing brightening agents.

ASSEMBLY INSTRUCTIONS

Place the Backrest (B,C) to the Recliner Loveseat Assembly(A), align with the metal brackets on each piece, then slowly lower the backrest until the metal brackets snap into the locked position side to the Loveseat Assembly (A).
Then connect Transformer (D) with Power Cord (E) as shown.
Assembly product is now completed.

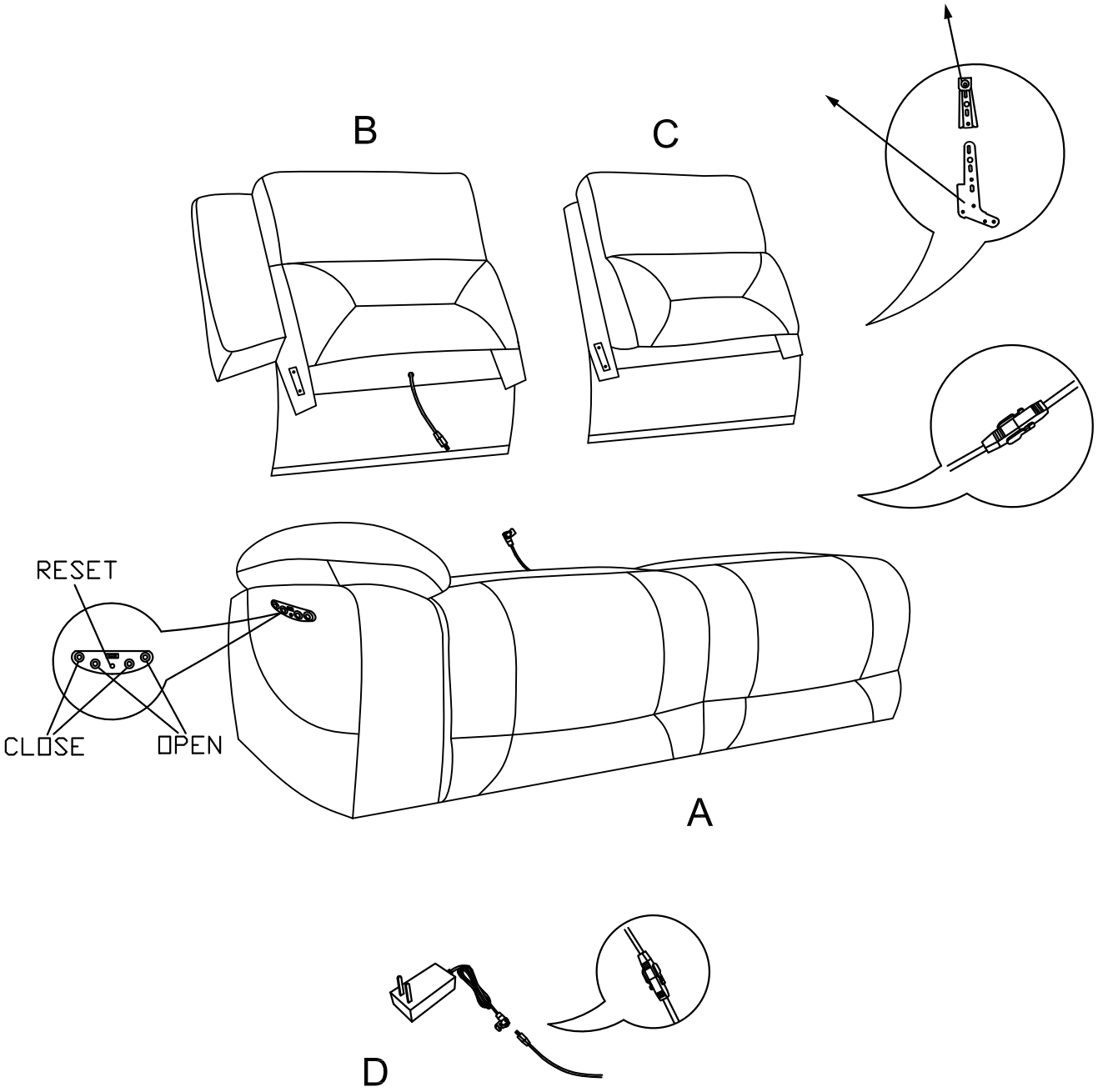

PARTS LIST

A RECLINER LOVESEAT ASSEMBLY (1 PC)

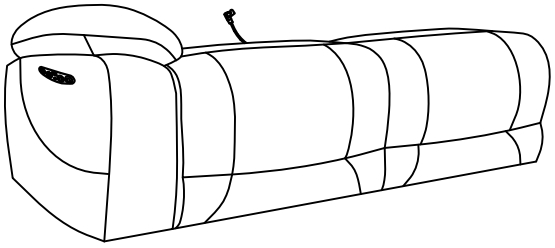

B LEFT BACKREST (1 PC)

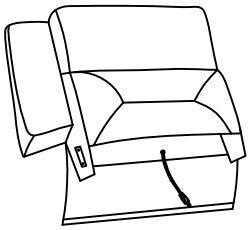

C RIGHT BACKREST (1 PC)

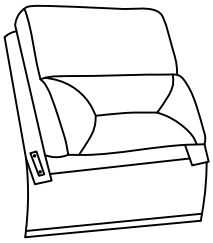

D TRANSFORMER (1 PC)

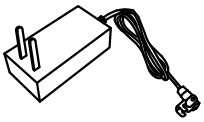

COMPLETLY RECLINER LOVESEAT

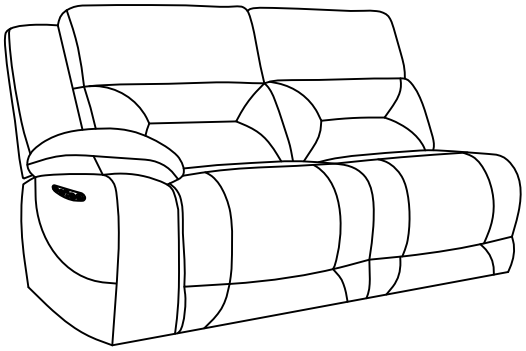

PRODUCT DETAILS	
Product Size	62"L x 44"W x 42.5"H
Carton Size	62"L x 34"W x29.5"H
Net Weight	137.3 Lbs
Gross Weight	150.5 Lbs
Cuft	40'

FABRIC CONTENT: POLYESTER

This fabric is not machine washable.
Allow +/- 3% residual shrinkage.
Do not use cleaning products containing brightening agents.

STEVE SILVER CO.

Description : Wedge
Product Size : 73"L x 47"W x 42.5"H

Your furniture purchase is an investment. Here are a few tips to maximize the lifetime of your furniture with a minimum amount of effort. Properly caring for your furniture can help ensure that it looks grea t year after year.

Wood Furniture Maintenance:
- Always dust, wipe, and clean *with* the grain of the wood.
- Dust with a soft cloth. Dust will scratch the furniture surface if not removed properly.
- Use the same type of polish consistently as interchanging oil-based and wax-based polishes will cause a build-up and result in a foggy or cloudy appearance.
- If a polished surface becomes foggy, rub it with a cloth dipped in a solution of one tablespoon vinegar to one quart of water. Rub softly with the grain until the surface is completely dry.
- Soap and water are not advisable for wood surfaces. Water can penetrate the finish and raise the grain on wood, causing damage.
- Remember to change dusting cloths frequently as dirty cloths may scratch your furniture's surface.

The Enemies of Wood:
- Moisture is wood's worst enemy. Liquid spills should be gently wiped up immediately. Coasters should be used under all beverages.
- Do not allow rubber or vinyl materials to lie on the furniture. Chemicals in rubber may leave a stain. Put a strip of felt or leather under accessories that have rubber or vinyl.
- Heat creates a chemical change in the furniture's finish, which results in a white spot. Use protective pads under hot dishes, appliances, etc.
- Sunlight's ultraviolet rays can damage the finish of furniture. Do not place furniture directly against a heater or radiator and do not place in the path of hot streams of air from central heating. This will cause extreme localized drying of the wood.

High Gloss Resin Table Maintenance:
- Resin tabletops have approximately 1/8" of a resin coat on the top face of the table, which will resist ice, water, wine, liquor, food, cleaning fluids, and warm or hot liquids; however, cups, glasses, etc. containing hot liquids should not be left on the table without a coaster for protection.
- Resin tabletops will scratch just the same as any other glossy surface and basic precautions should be taken.
- For lasting shine, the resin table should be waxed with a car wax that does not contain silicon. Maintaining this wax build-up will result in a high gloss shine.
- When wiping down the table, a soft, clean rag should be used. Do not use a heavy paper.

Granite Top Maintenance:
The surface of the granite on your table has been polished or sealed to create a generally non-porous surface. The stone has many natural characteristics including: veining, hairline cracks, and color variations - which make up the stone's beauty.
To maintain the beauty of your granite:
- Protect surfaces from scratching, staining and etching by:
* Keeping them free of debris or sharp objects
* Wiping up spills immediately
* Avoiding contact with chemicals (particularly acid-based materials)
- Clean with pH neutral products or those especially formulated for use on stone.
- It is not recommended to use a water-based solvent for dark granite as it will remove the polish from the surface.
- After a period of use, apply a penetrating sealer to prevent contaminants from being absorbed into the stone.
- Remove stains with special absorbent poultices formulated for use on stone.
- Renew the surface on *polished* granite (granite with a high gloss surface) by buffing with special stone polish, powder or cream.
Do not use granite polish on granite with a matte finish, which has been honed rather than polished. (Penetrating sealer may be used on both polished and honed granite.)

Marble Top Maintenance:
Marble may be stone, but it is porous stone and can stain easily. Treating marble surfaces the same as wood surfaces is a great rule of thumb.
- It is recommended to seal the tops on a regular basis (every 6 to 12 months). A good quality stone sealer can be purchased from any tiles/stone store or any homecare store and should be applied according to the manufacturer's recommendation.
- When sealed properly, marble tops can be used indoors and outdoors and can withstand any weather conditions except internal freezing. Snow or freezing rain will penetrate the table and cause cracks.

Caring for the Fabric on Upholstered Furniture:
- Frequent vacuuming of the entire upholstered area will prevent dust from settling into the fibers.
- Professional cleaning is always recommended for all upholstered pieces.
- Always pre-test a small area of fabric in an inconspicuous area when cleaning before proceeding.
- Do not use cleaning products containing brightening agents.

ASSEMBLY INSTRUCTIONS

Place the Left/Right Backrest (B,C) to the Wedge Assembly (A), align with the metal brackets on each piece, then slowly lower the backrest until the metal brackets snap into the locked position side to the Wedge Assembly (A).
Assembly product is now completed.

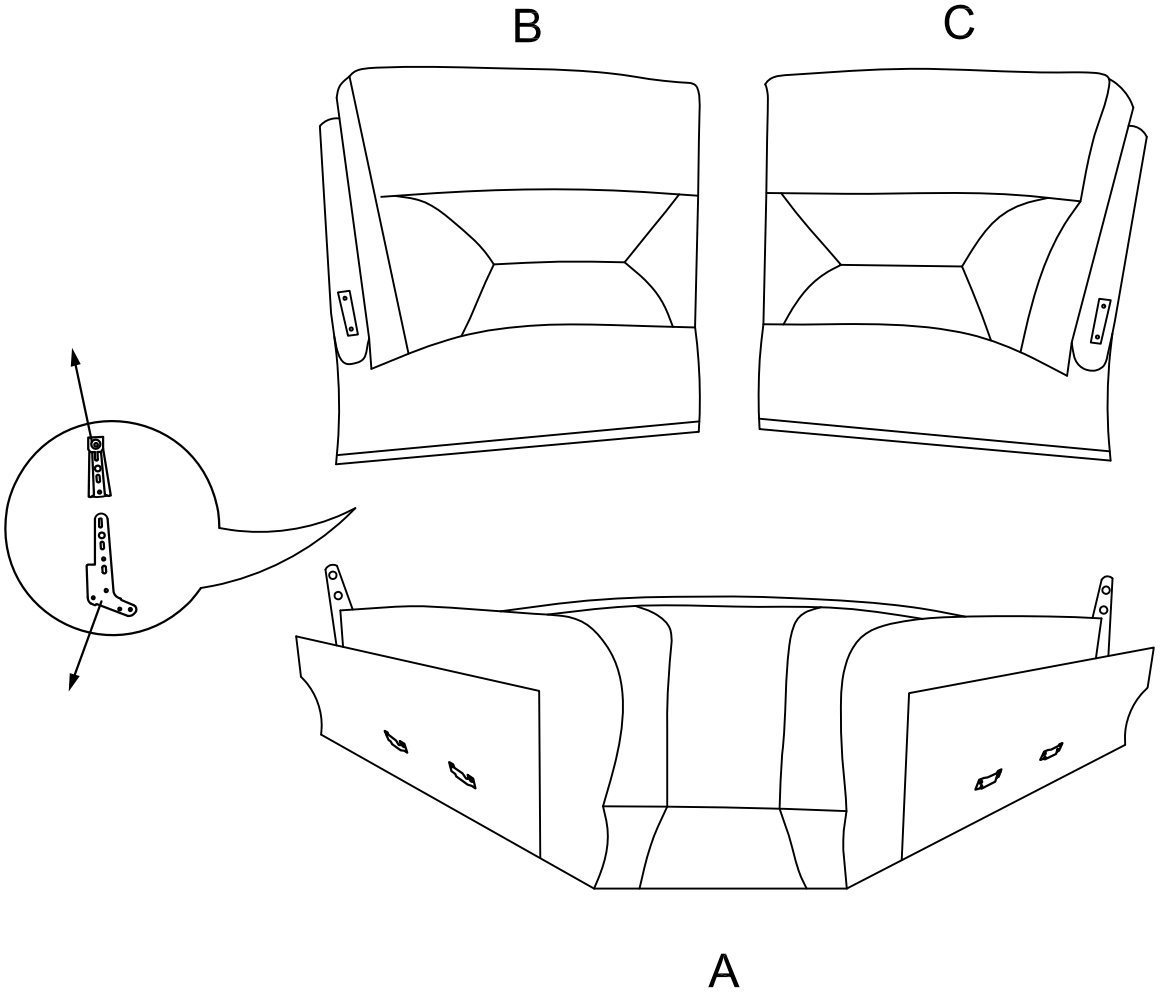

PARTS LIST

A	B	C
WEDGE ASSEMBLY (1 PC)	LEFT BACKREST (1 PC)	RIGHT BACKREST (1 PC)

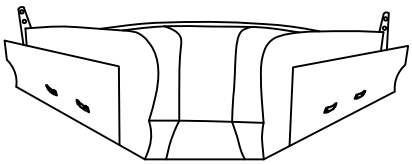

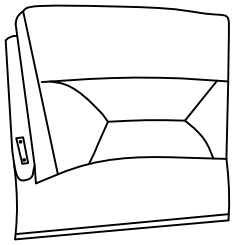

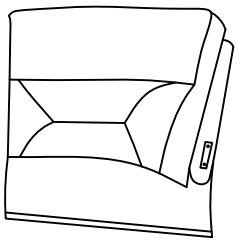

COMPLETLY WEDGE

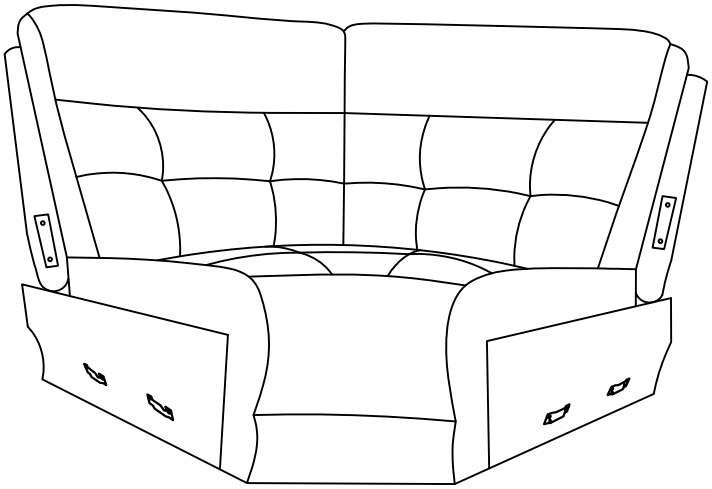

PRODUCT DETAILS	
Product Size	73"L x 47"W x 42.5"H
Carton Size	64"L x 38"W x29.5"H
Net Weight	75.3 Lbs
Gross Weight	88.5 Lbs
Cuft	41.5'

FABRIC CONTENT: POLYESTER

This fabric is not machine washable.
Allow +/- 3% residual shrinkage.
Do not use cleaning products containing brightening agents.