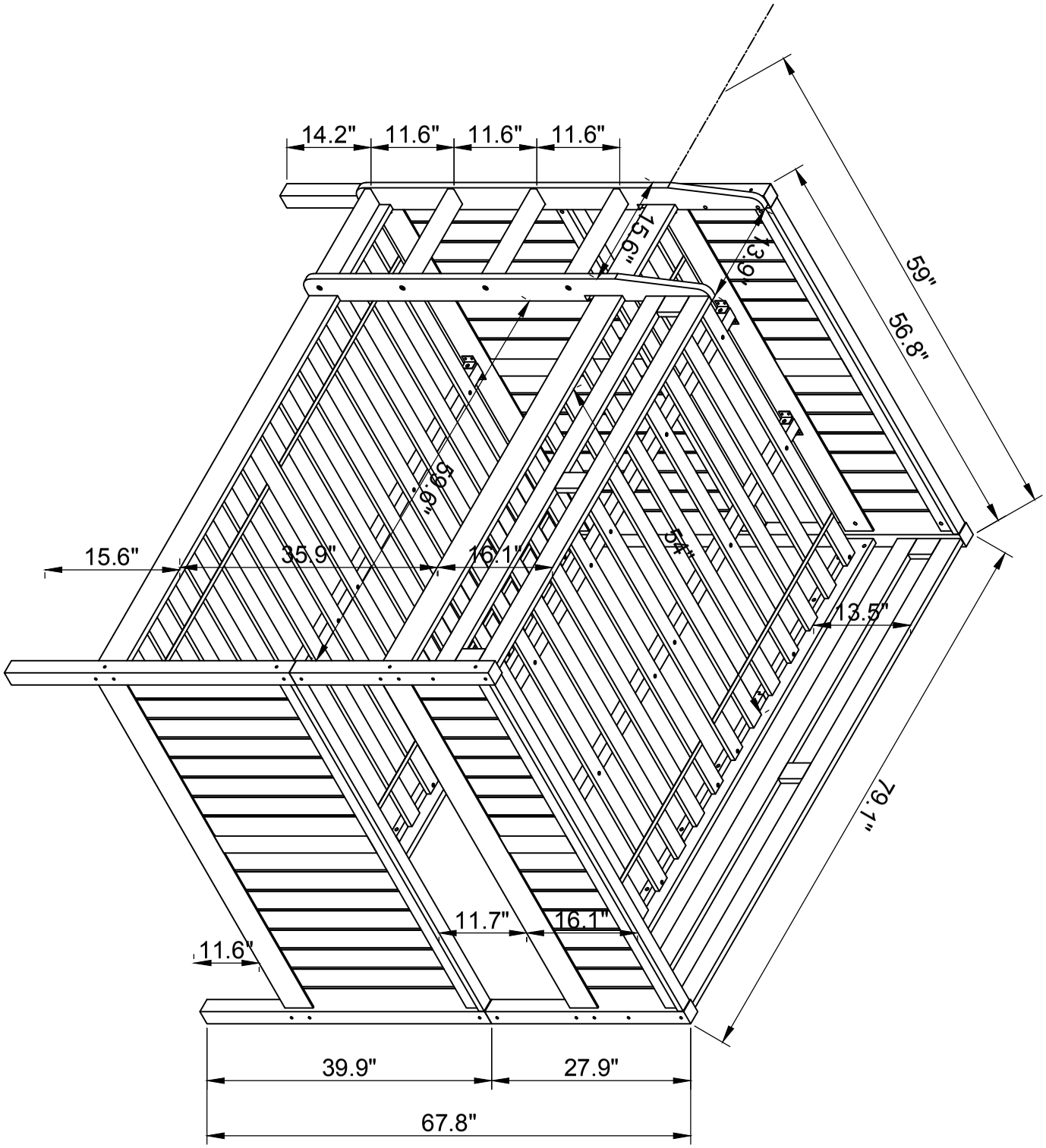
14.2"
11.6"
11.6"
11.6"
15.6"
13.9"
59"
56.8"
59.6"
54"
15.6"
35.9"
16.1"
13.5"
79.1"
11.7"
16.1"
11.6"
39.9"
27.9"
67.8"