USER MANUAL

Thank you for choosing us.

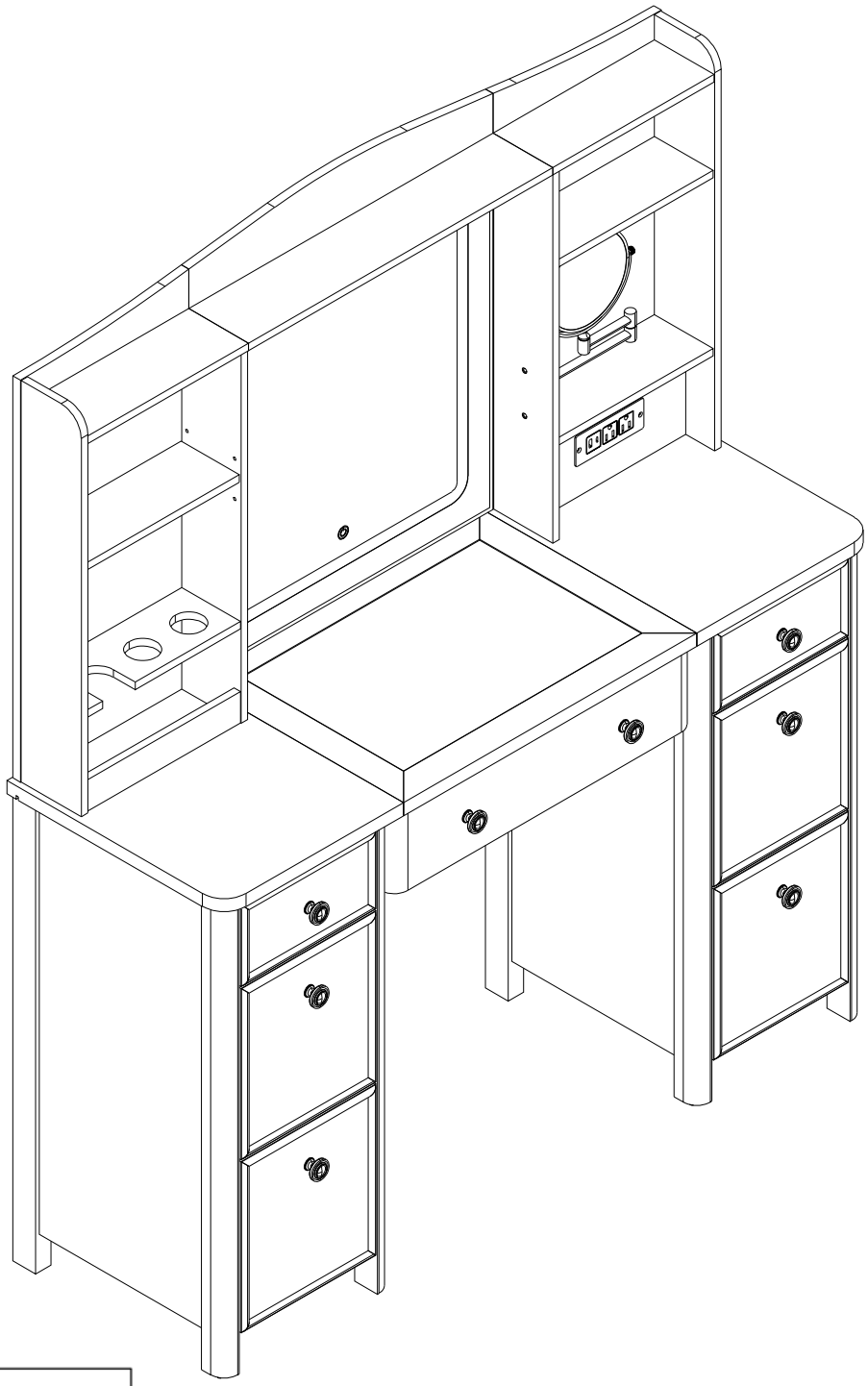



Version:1.0

General Guidelines

- Please read the following instruction carefully and use the product accordingly.
- Please keep this manual and hand it over when you transfer the product.
- This summary may not include every detail of all variations and considered steps.
- Please contact us when further information and help are needed.

Notes

- The product is intended for indoor use only. The product must be assembled and used in accordance with the provisions of the manual. Personal injury and/or damage to product may occur if products are used outside of their intended purposes and/or if products have been changed/modified from their original design. The seller does not assume any responsibility or liability with respect to any injury/damage caused by incorrect assembly or improper use.
- Avoid long-term exposure to humid environments to prevent mildew.
- Keep the product away from fire sources and high temperatures. Do not expose the product to direct sunlight.
- Do not place any hot objects on the surface of the product.
- If there are any defective or missing parts after unpacking, please cease assembly immediately and contact us.
- Please assemble the item on a spacious surface and do not place the unwrapped product directly on the ground to avoid product damage.
- Please do not stand or sit on the wooden boards.
- Please wear gloves during the assembly and/or disassembly process to avoid scratches from any sharp edges.
- Please match the corresponding part and fitting based on the part number in the manual.
- If the part does not match with the fitting, please check the piece as specified in this manual.
- During assembly, first loosely align all screws with the corresponding pre-drilled holes and then tighten the screws one by one.
- Periodically inspect screw tightness while the product is in use. If necessary, retighten to ensure structural integrity.
- If you accidentally spill water or another liquid on the surface, immediately wipe clean with a dry towel.
- Please keep the product away from sharp, pointed objects and corrosive substances to prevent product damage.
- Please place this item on level, solid ground during use.

Warnings

- Children are not allowed to assemble the product. During assembly, keep all small parts out of the reach of children as they may be fatal if swallowed or inhaled.
- Children are forbidden to climb or play on the product to avoid serious bodily injury caused by the toppling.
- Keep plastic packing bags out of reach of children to avoid any potential danger, such as suffocation.
- We have equipped some high-sized products with anti-dumping accessories. Please fix the product to the wall to prevent personal injury caused by accidental dumping.

Tips-contact us

- If there is any damage after unpacking or you have any questions during assembly, please feel free to contact us at your earliest convenience. Our customer care team provides professional returns or exchanges as well as assembly guidance.

Disassembly Diagram

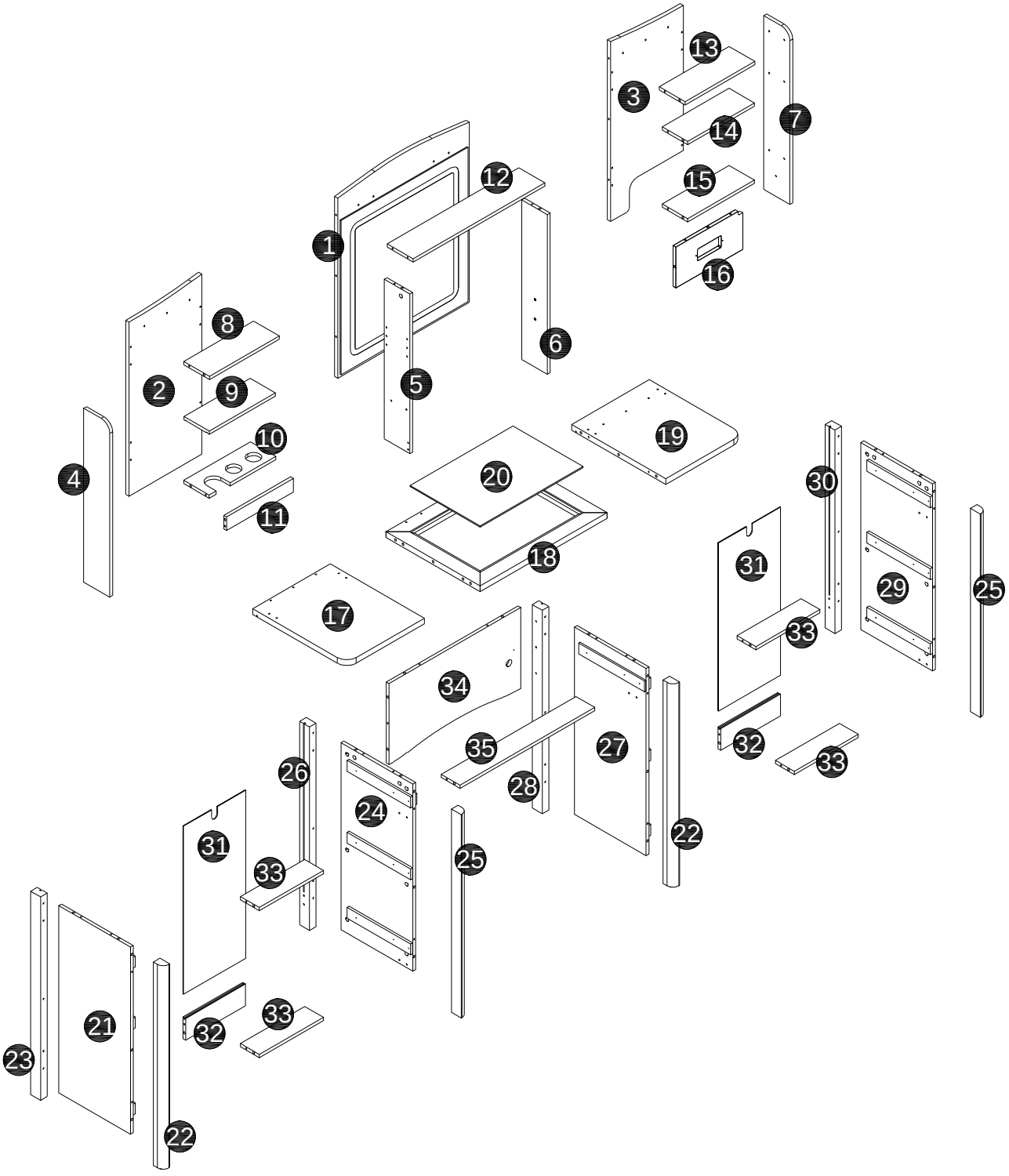

Disassembly Diagram

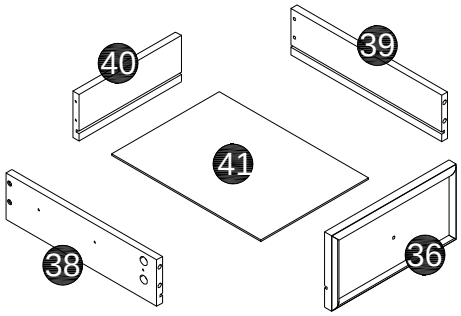

X2

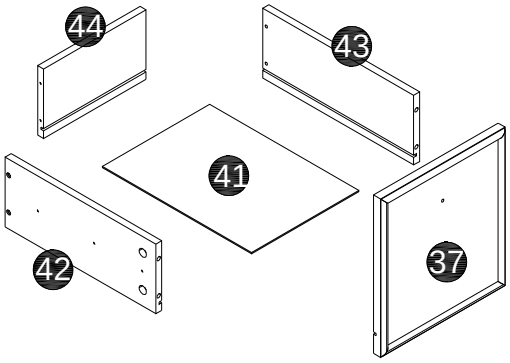

X4

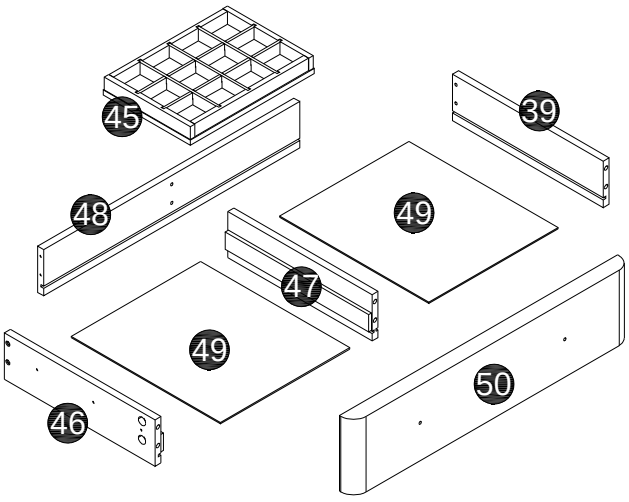

Parts List

Unit: (mm)

1 690x560x14 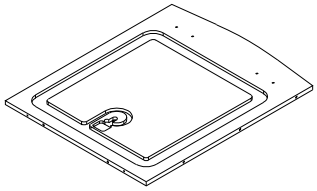 X1	2 663x310x14 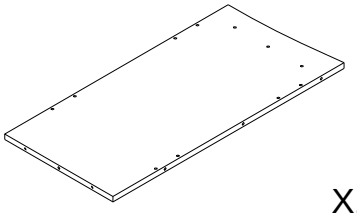 X1	3 663x310x14 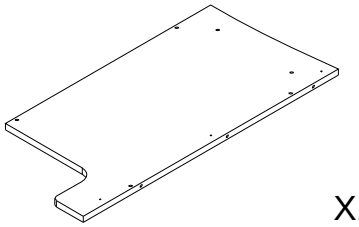 X1
4 640x111x12 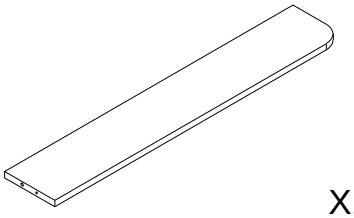 X1	5 558x109x12 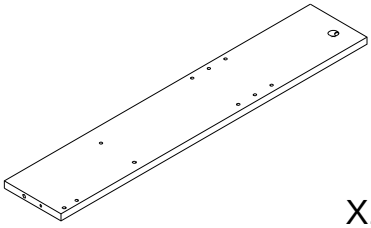 X1	6 558x109x12 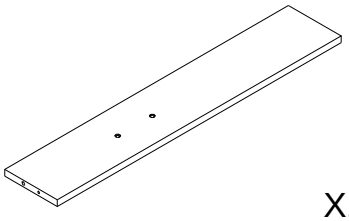 X1
7 560x110x12 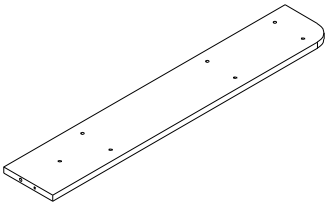 X1	8 297x110x12 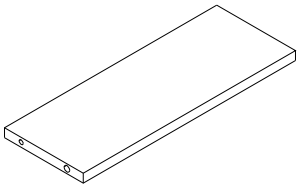 X1	9 281x107x12 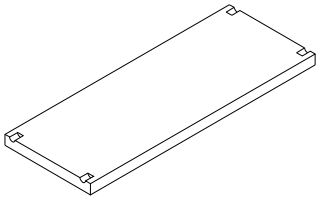 X1
10 284x108x12 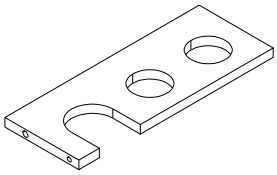 X1	11 284x50x12 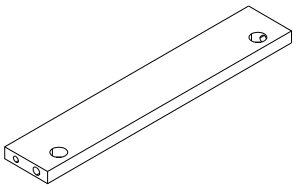 X1	12 560x110x12 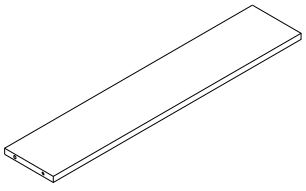 X1
13 297x110x12 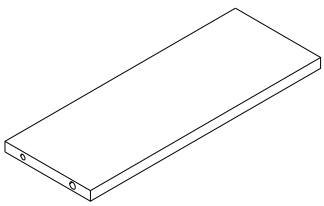 X1	14 284x108x12 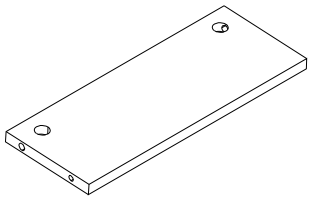 X1	15 284x108x12 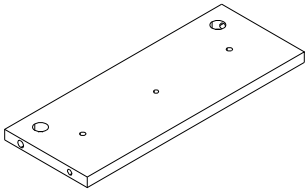 X1

Parts List

Unit: (mm)

16 284x150x12 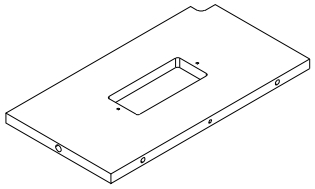 X1	17 400x330x21 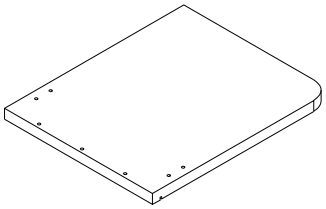 X1	18 540x400x21 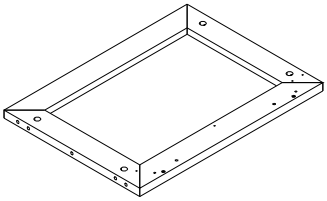 X1
19 400x330x21 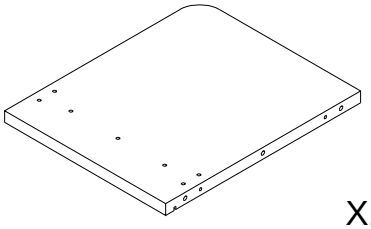 X1	20 438x298x4 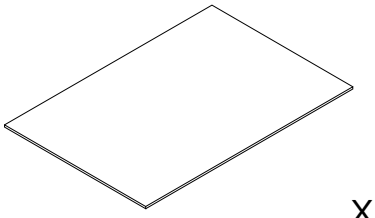 X1	21 689x305x21 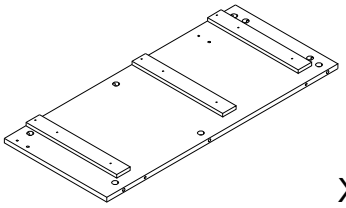 X1
22 754x42x28 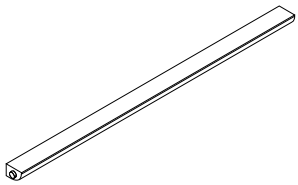 X2	23 754x42x28 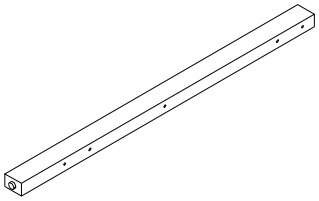 X1	24 689x305x27 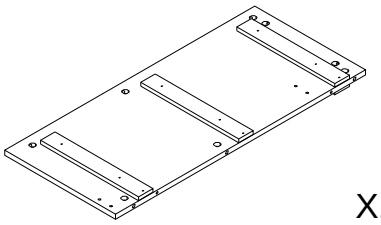 X1
25 754x42x28 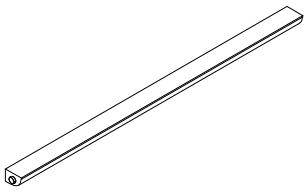 X2	26 754x42x28 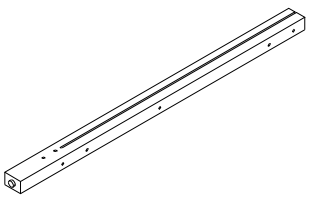 X1	27 689x305x27 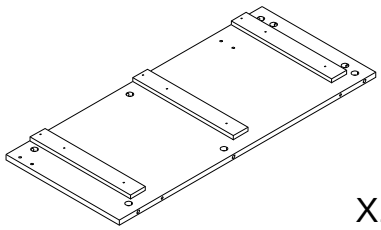 X1
28 754x42x28 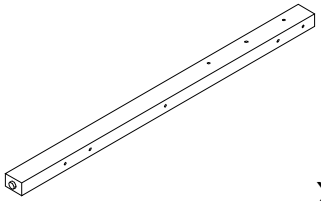 X1	29 689x305x21 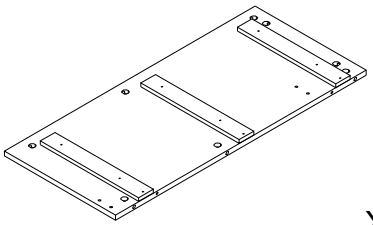 X1	30 754x42x28 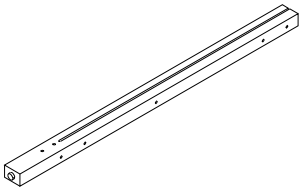 X1

Parts List

Unit: (mm)

31 619x264x3 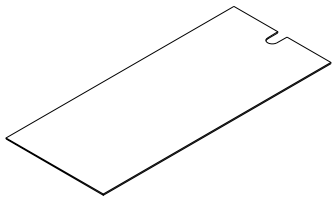 X2	32 254x80x12 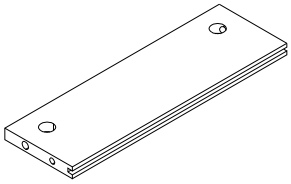 X2	33 273x80x12 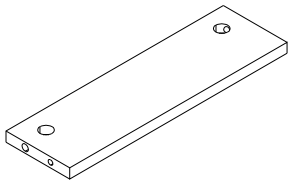 X4
34 560x298x12 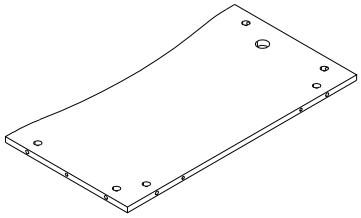 X1	35 573x80x12 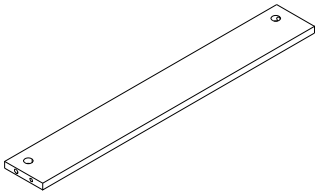 X1	

Parts List

Unit: (mm)

36 248x130x19 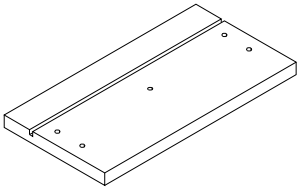 X2	37 273x248x19 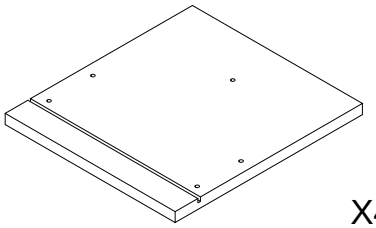 X4	38 204x80x12 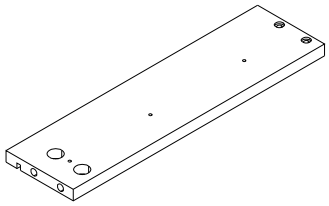 X2
39 204x80x12 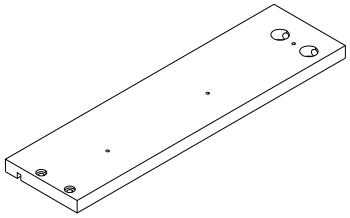 X3	40 352x67x12 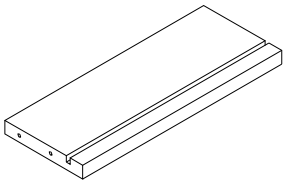 X2	41 297x214x3 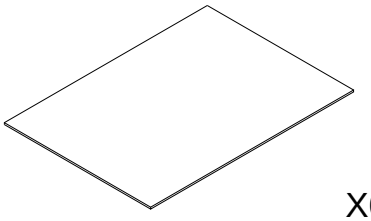 X6
42 300x120x12 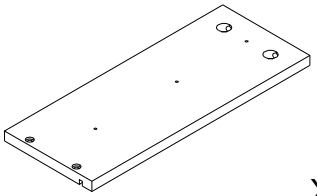 X4	43 300x120x12 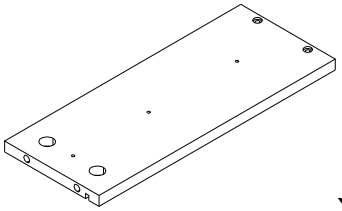 X4	44 204x120x12 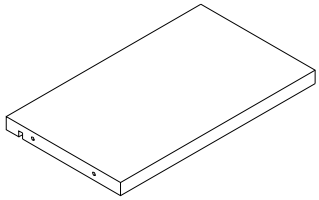 X4
45 247x173x31 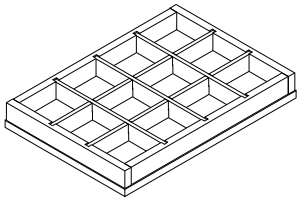 X1	46 300x80x18 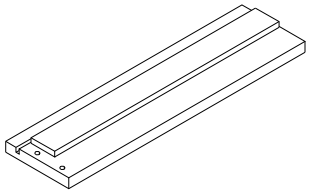 X1	47 287x80x18 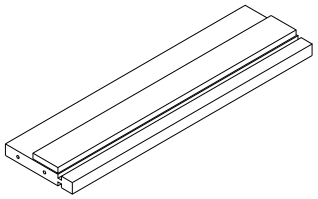 X1
48 510x80x12 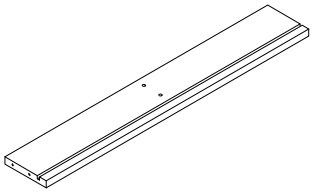 X1	49 297x258x3 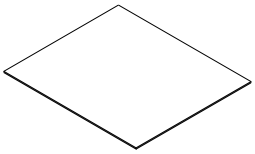 X2	50 554x130x28 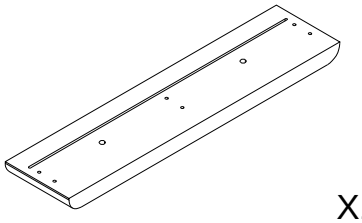 X1

Components Sheet

Unit: (mm)

A **Ø6x33.5MM**

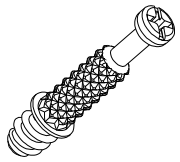

X103(+5)

B **Ø15x9.5MM**

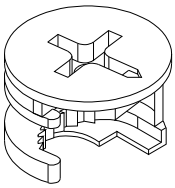

X103(+5)

C **Ø6x30MM**

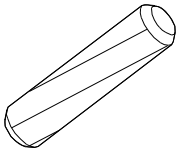

X85(+5)

D **Ø3.5x12MM**

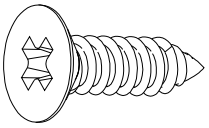

X98(+5)

E **12"x35MM**



X7

F **Ø5x50MM**

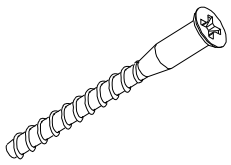

X23(+2)

G

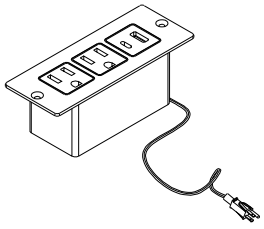

X1

H

H1 x2		**73x25x15MM**
H2 x2		**Ø4X12MM**
H3 x2		**Ø6X30MM**
H4 x2		**Ø4X35MM**

X1

I

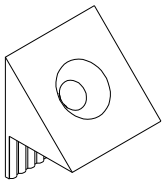

X12(+1)

J **Ø3x15MM**

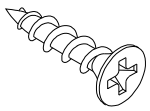

X12(+1)

K

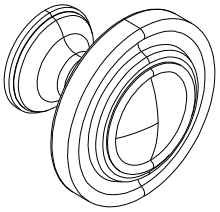

X8

L **M4x19mm**

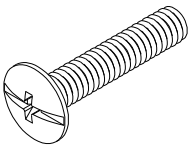

X8

M

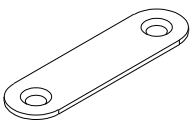

X6(+1)

N



N1

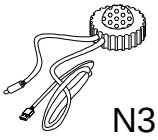

N3



N2x5

X1

O

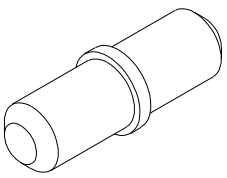

X4(+1)

Components Sheet

Unit: (mm)

P 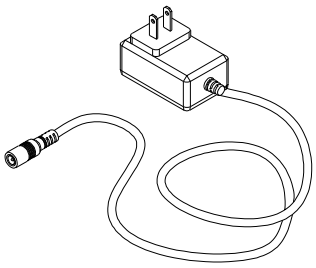 X1	**Q** **M4x12MM** 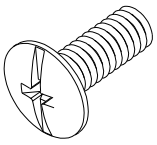 X2	**R** 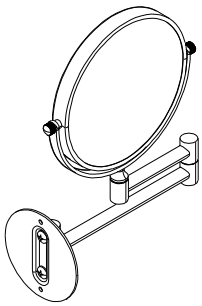 X1
S **Ø8x50MM** 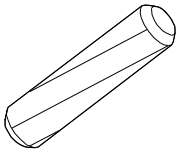 X6(+1)	**T** **Ø4x38MM** 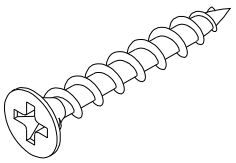 X30(+3)	**U** **Ø25MM** 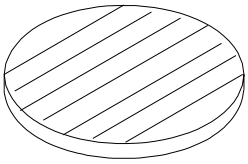 X100(+5)
V **Ø25MM** 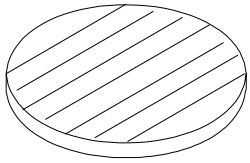 X4(+1)	**W** 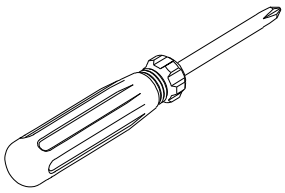 X1	

1

E  x7

INSTALLATION STEPS
Press the plastic part in the indicated direction to separate drawer runner **K1** and **K2** before assembling.

REMARK:
Please grip the **E1** part while sliding the **E2** part.

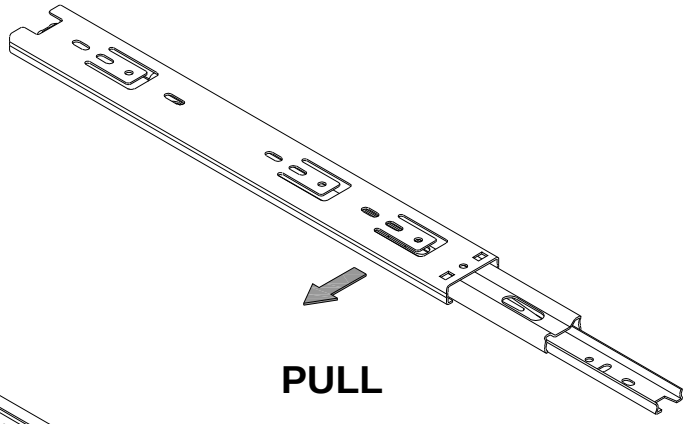

PULL

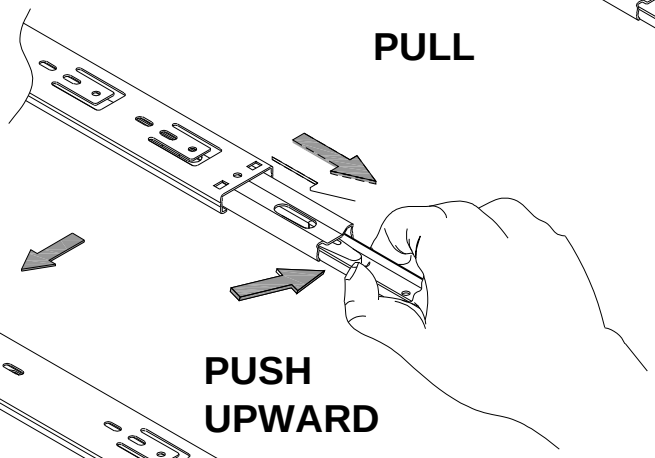

PUSH UPWARD

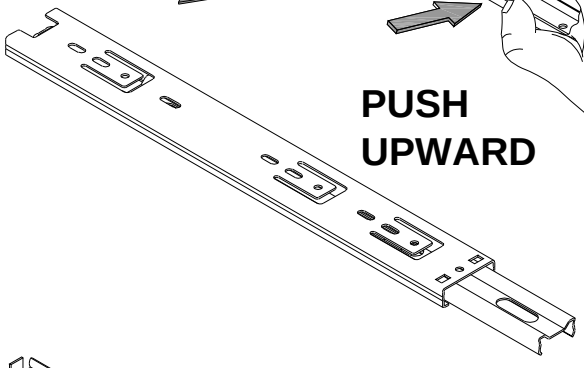

E1x14

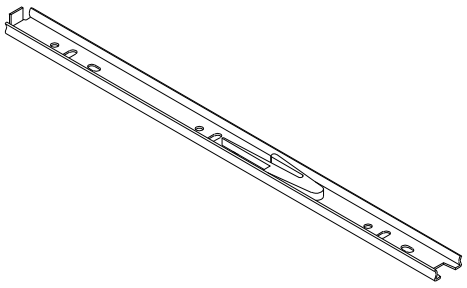

E1x14

2

A x6
Ø6x33.5mm

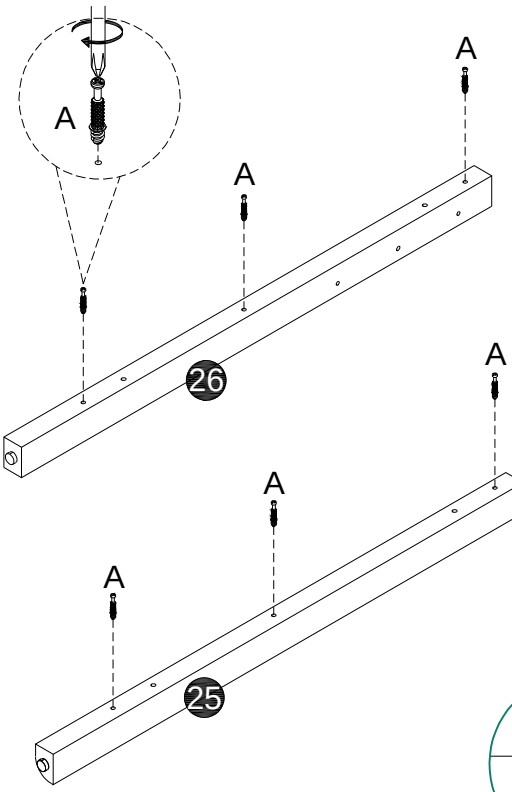

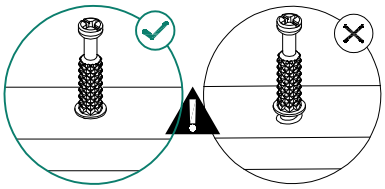

3

B x6
Ø15x9.5mm

C x4
Ø6x30mm

WARNING

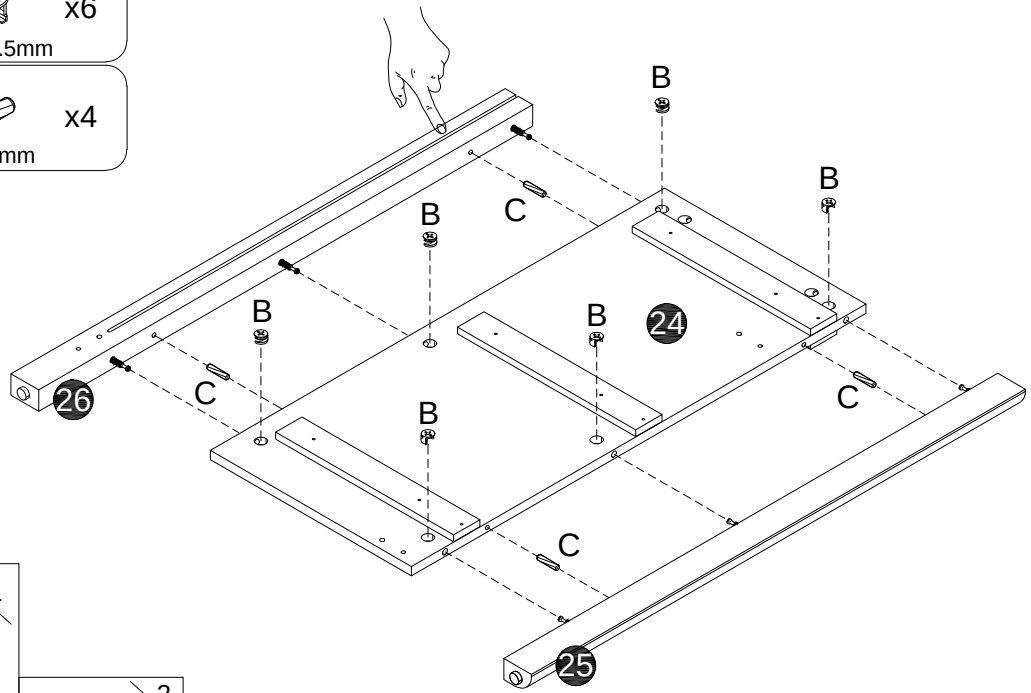

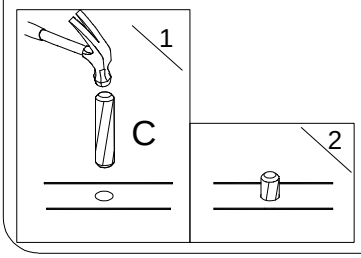

4

D x9
Ø3.5x12mm

E1 x3

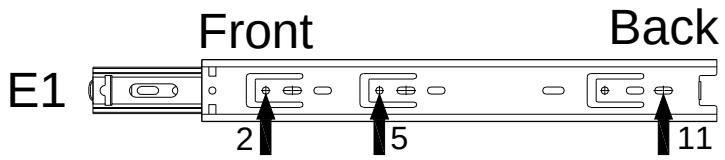

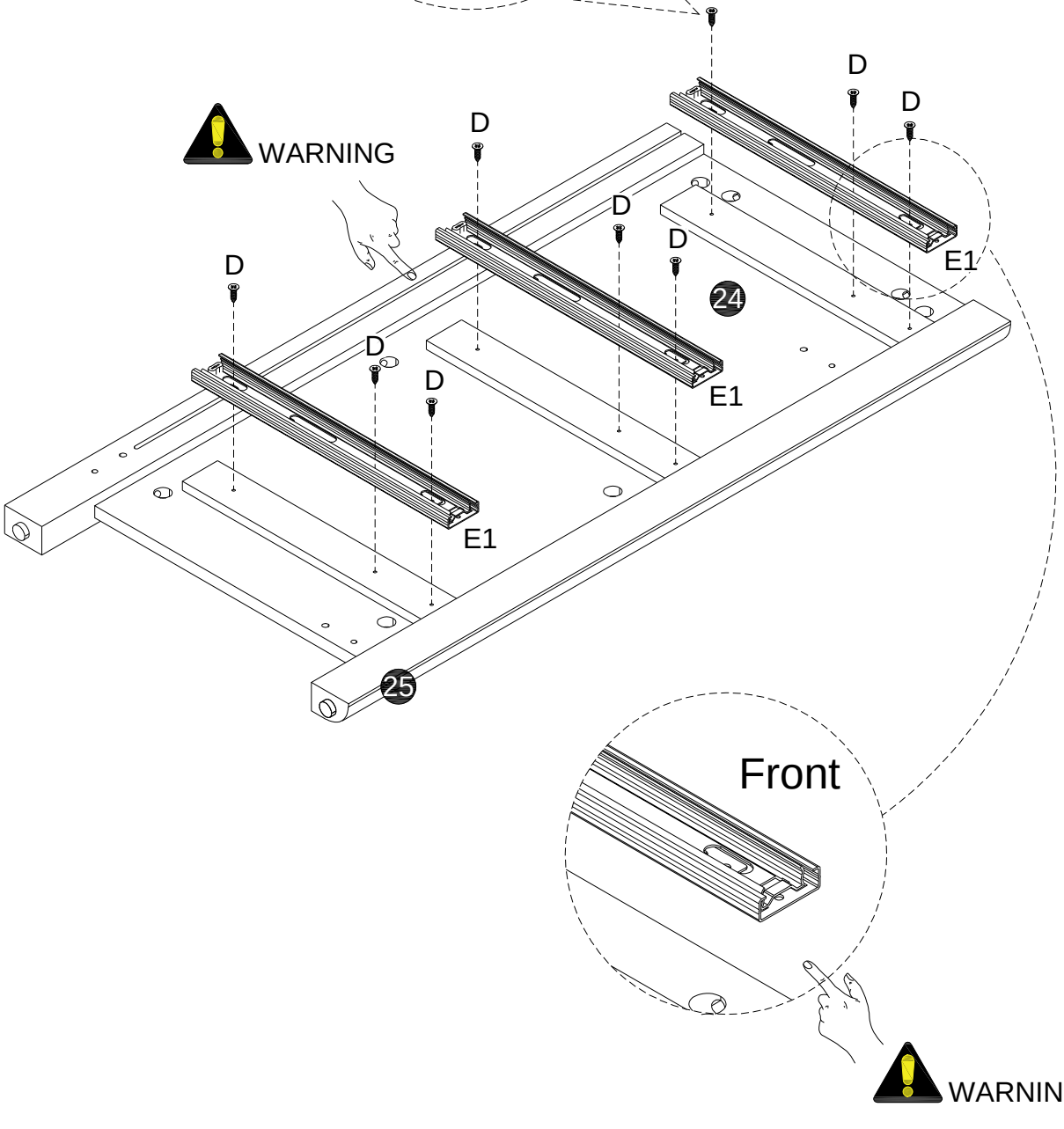

5

A x3
Ø6x33.5mm

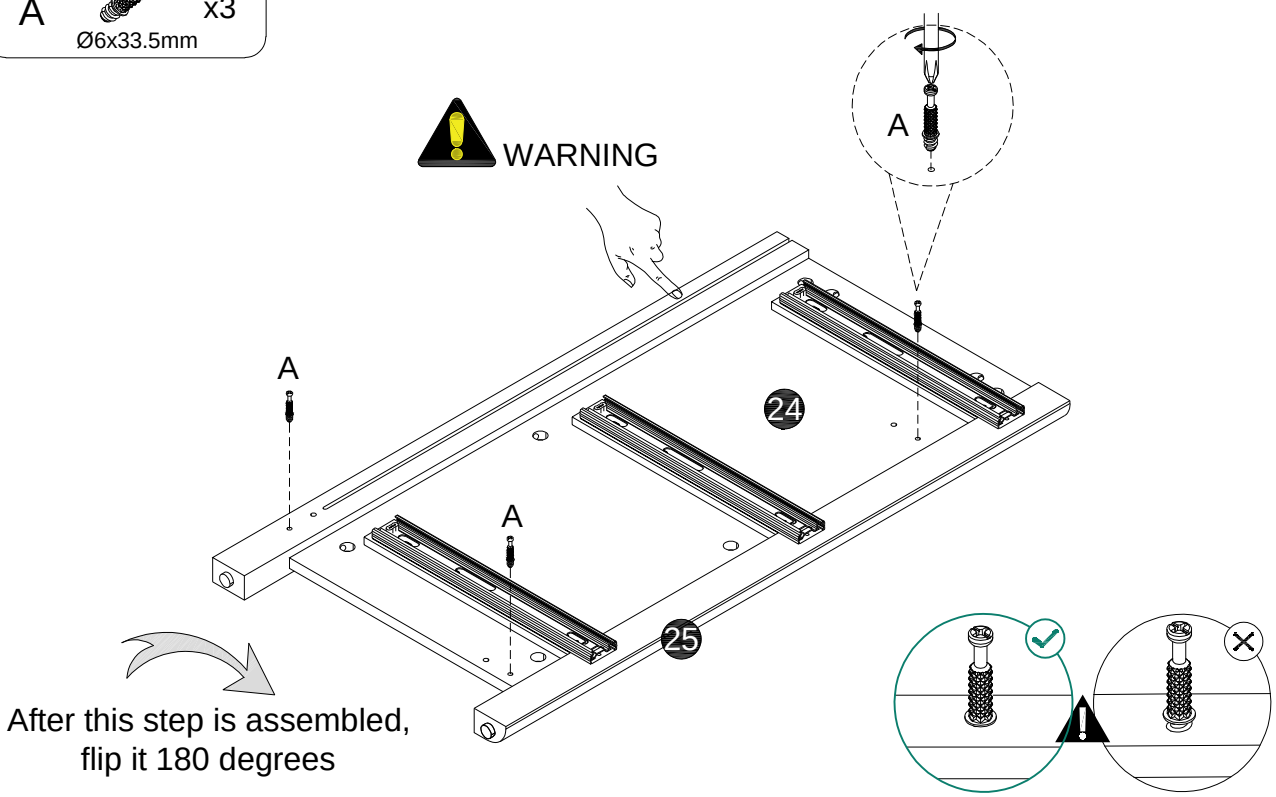

6

D x3
Ø3.5x12mm

E1 x1

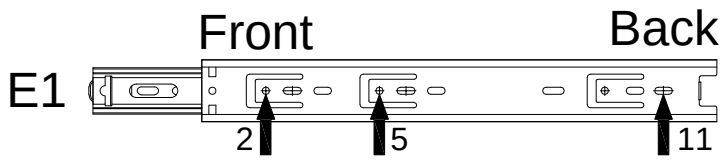

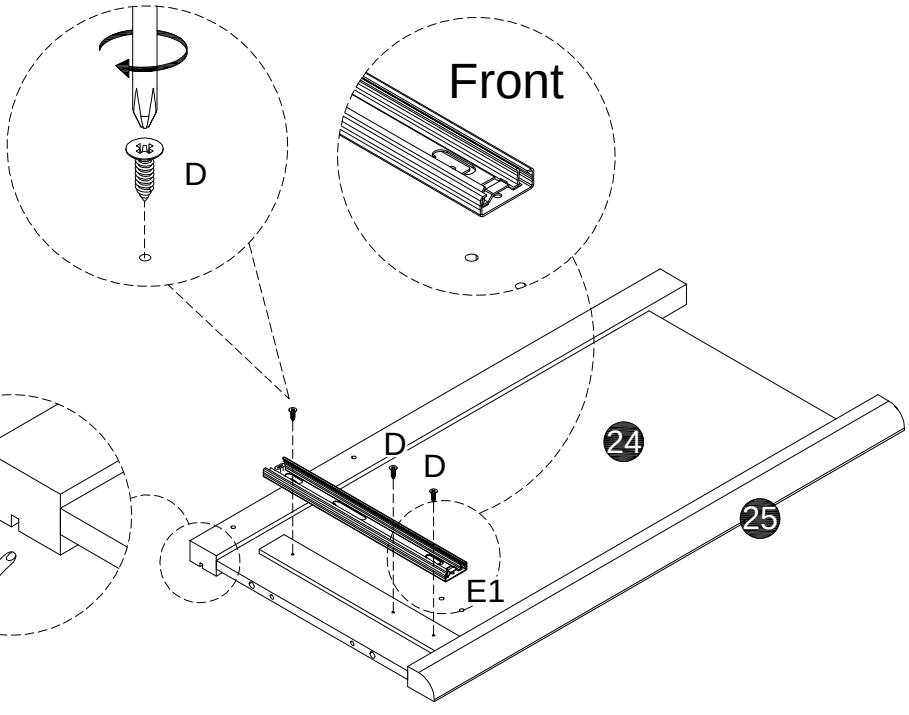

7

A x3
Ø6x33.5mm

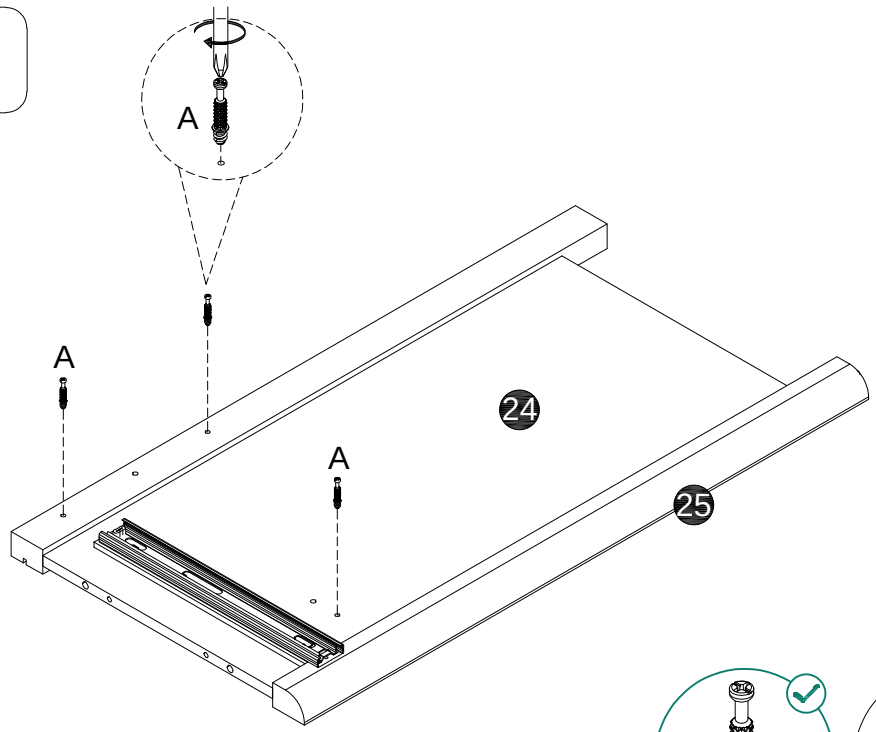

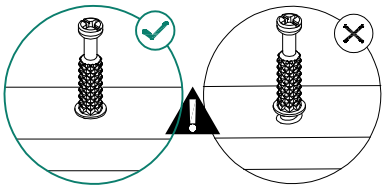

8

A x6
Ø6x33.5mm

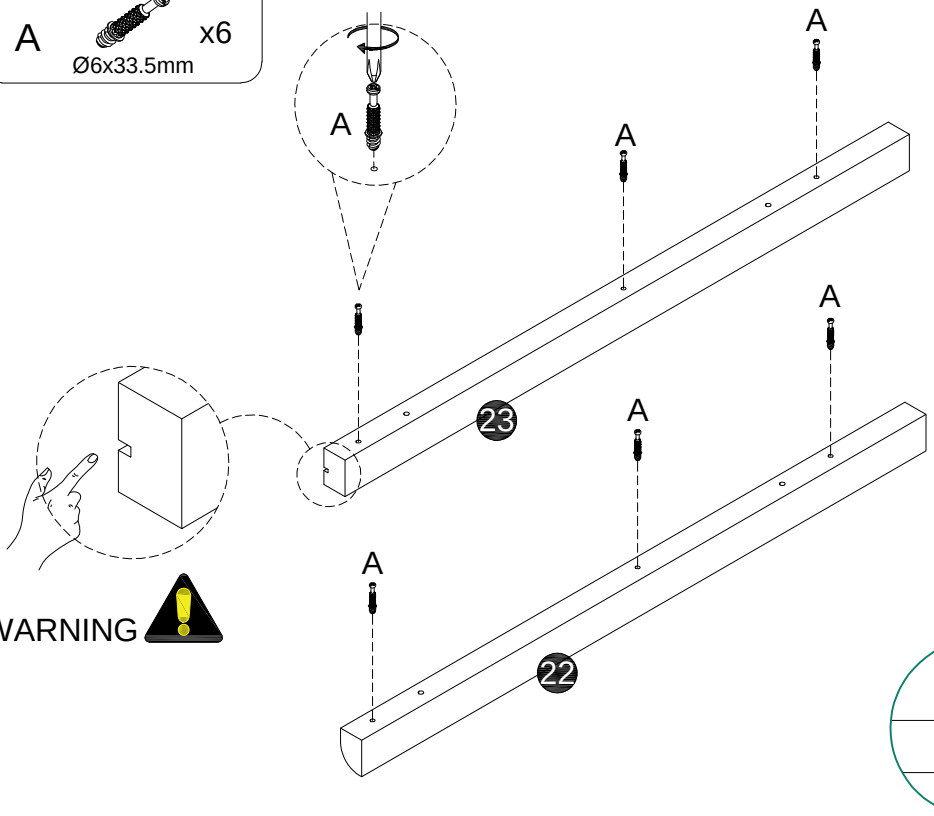

WARNING

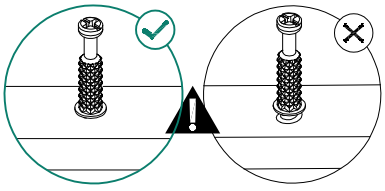

9

B x6
Ø15x9.5mm

C x4
Ø6x30mm

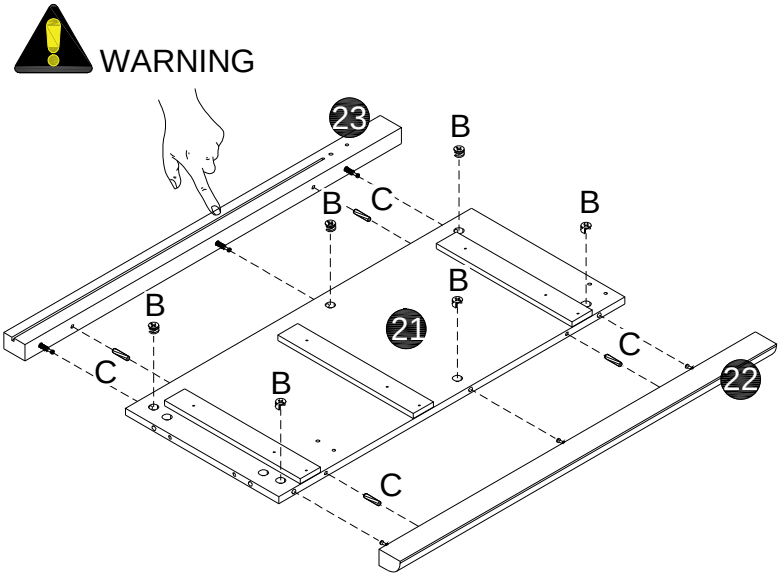

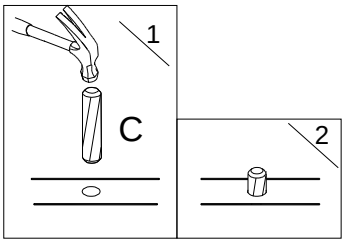

10

D x9
Ø3.5x12mm

E1 x3

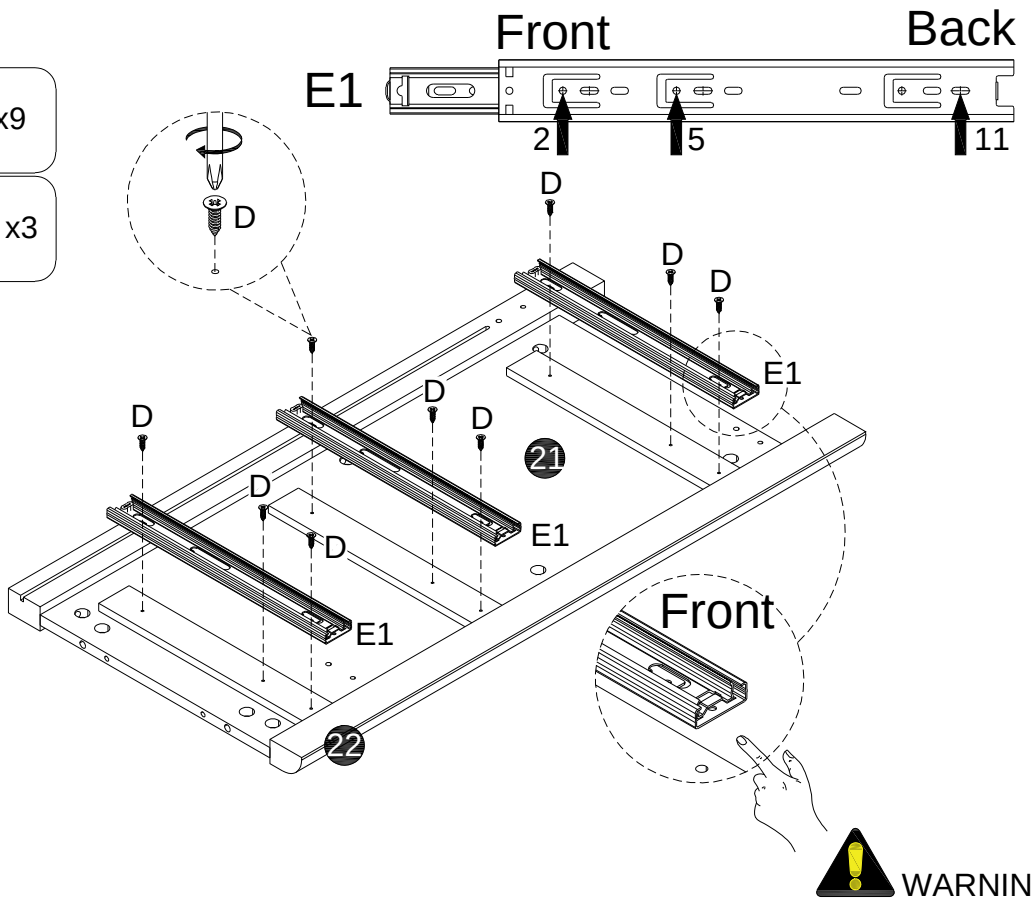

11

A x3
Ø6x33.5mm

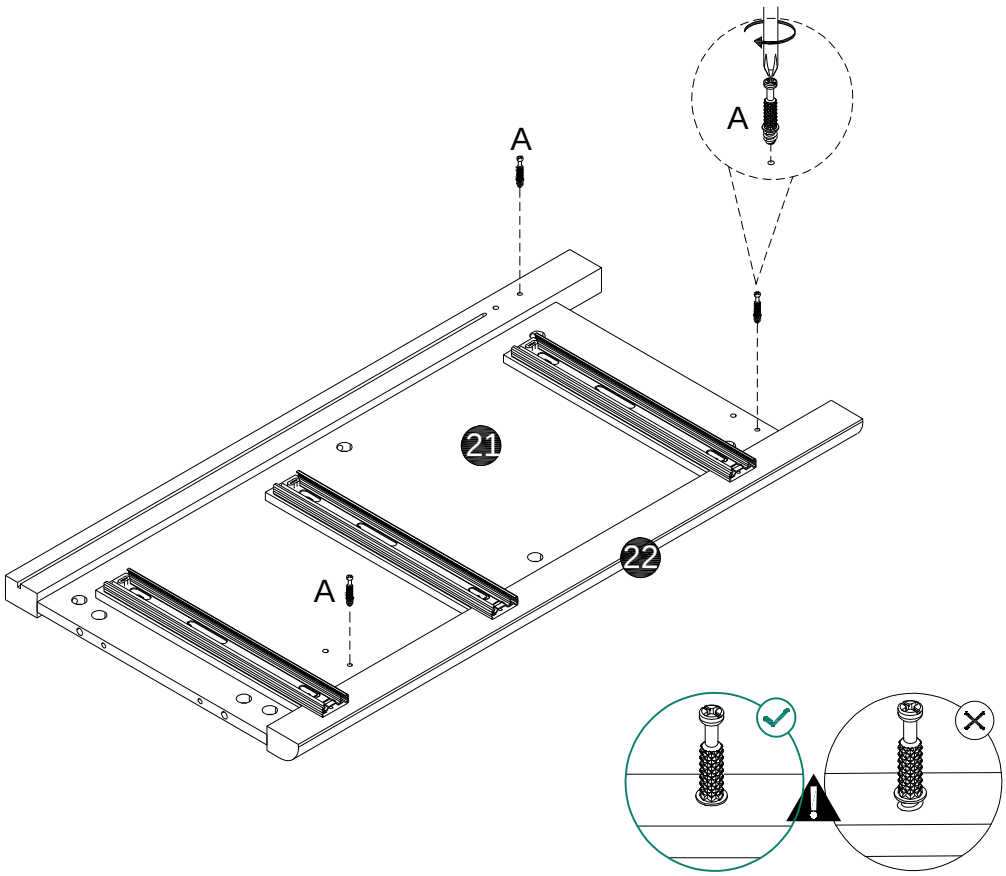

12

B x3
Ø15x9.5mm

C x3
Ø6x30mm

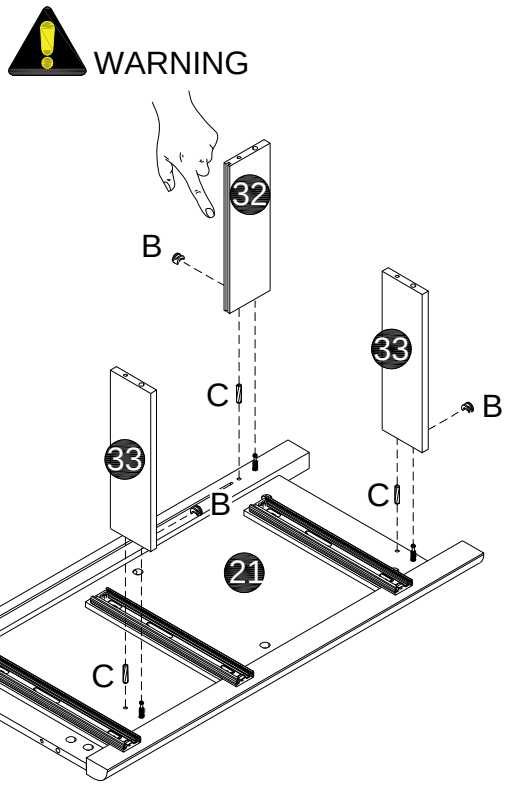

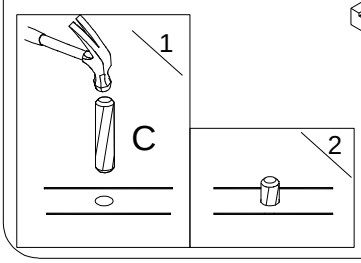

13

B x3
Ø15x9.5mm

C x3
Ø6x30mm

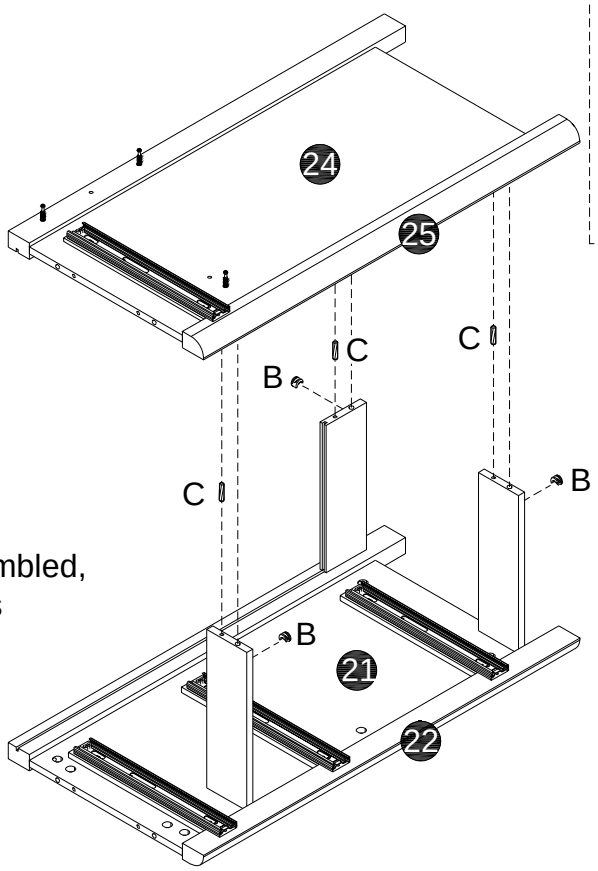

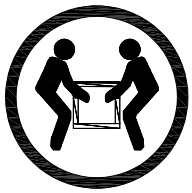

CAUTION: Heavy! You may need assistance with this step

After this step is assembled, flip it 90 degrees

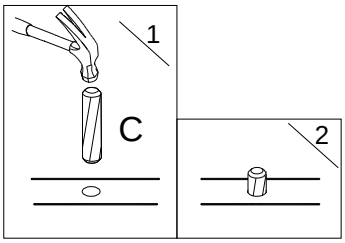

14

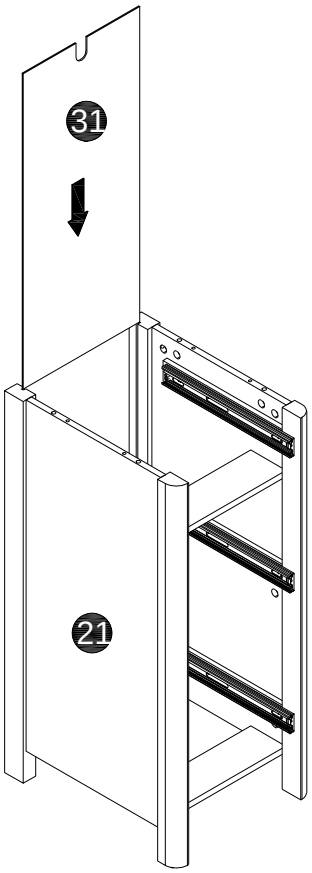

15

A  x6
Ø6x33.5mm

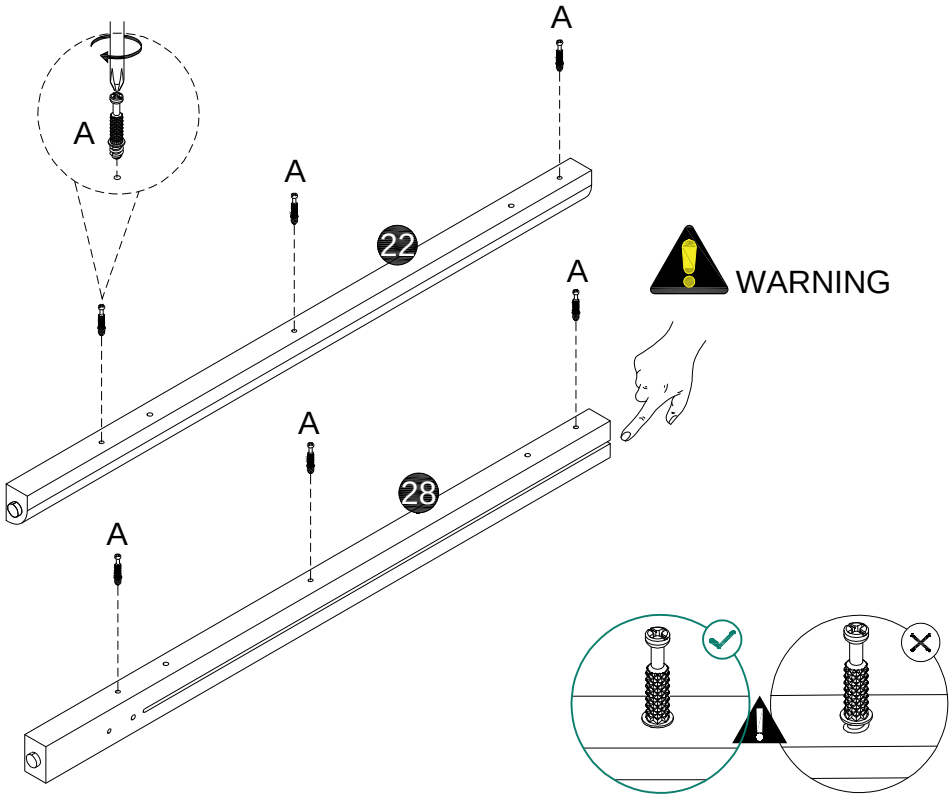

16

B  x6
Ø15x9.5mm

C  x4
Ø6x30mm

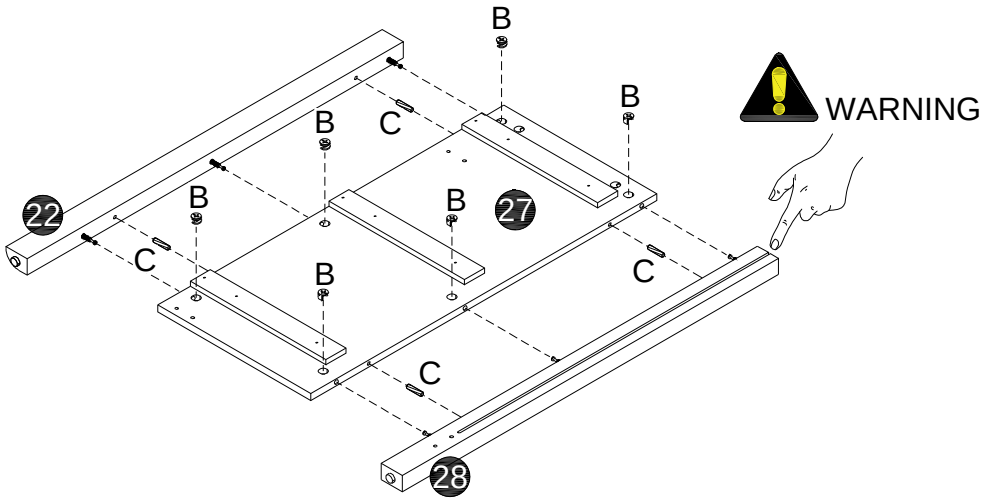

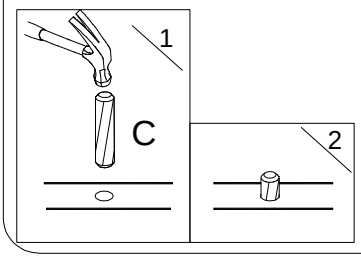

17

D x9
Ø3.5x12mm

E1 x3

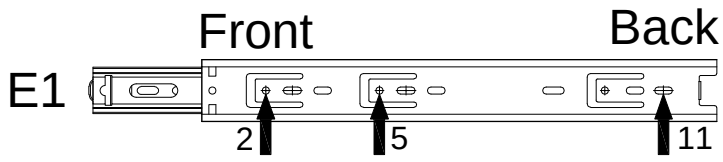

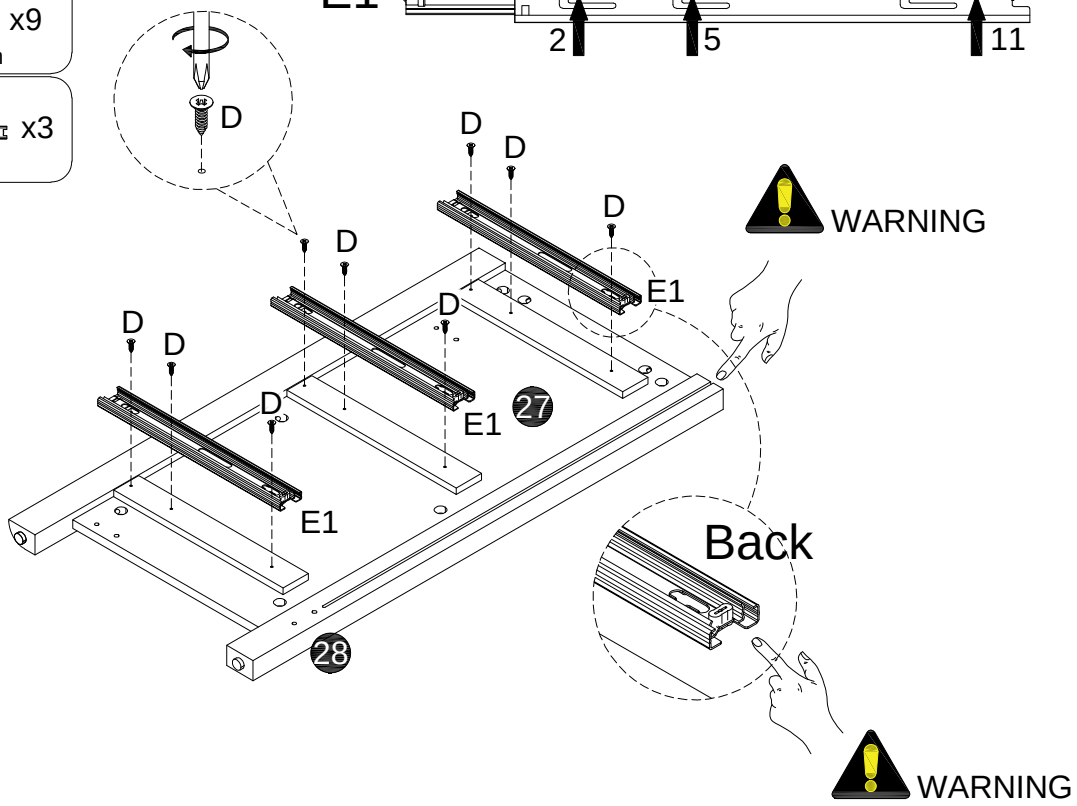

18

A x3
Ø6x33.5mm

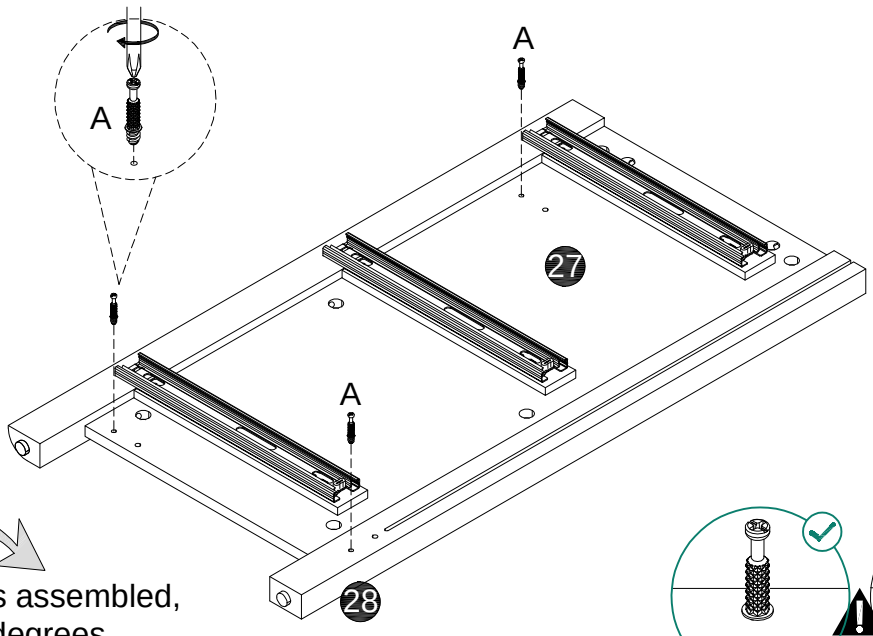

After this step is assembled,
flip it 180 degrees

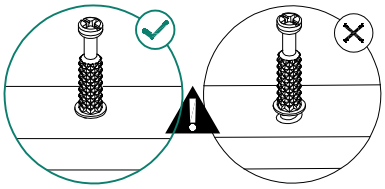

19

D x3
Ø3.5x12mm

E1 x1

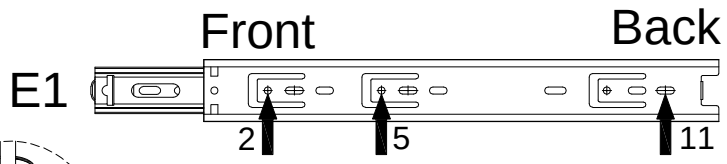

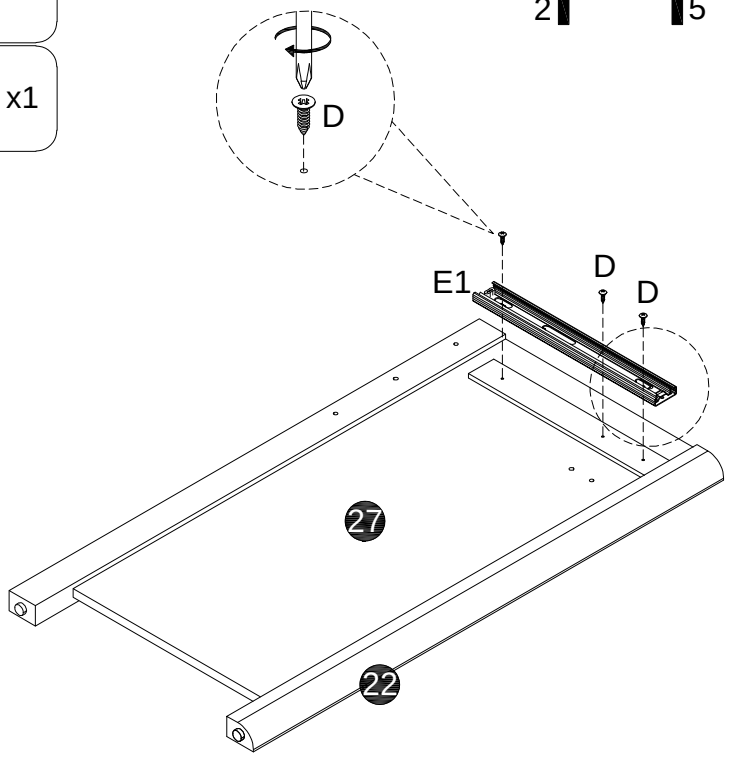

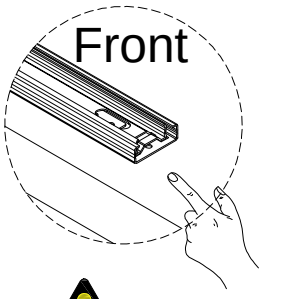



20

A x3
Ø6x33.5mm

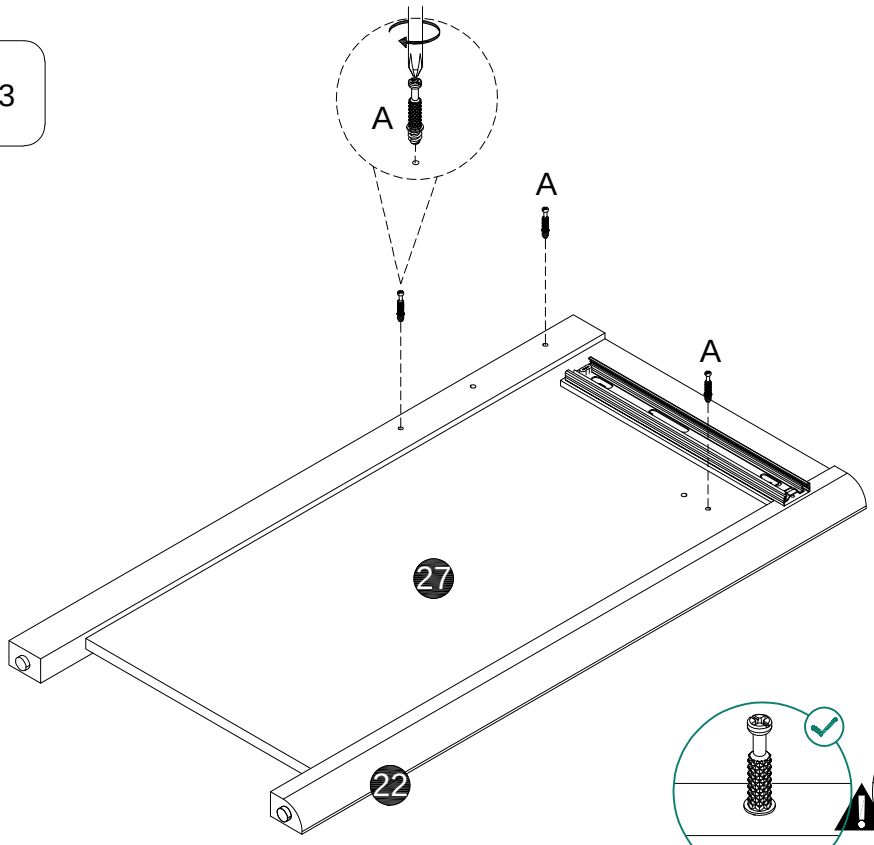

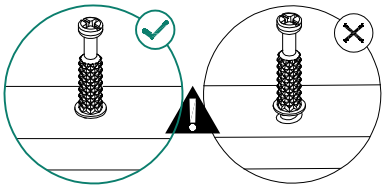

21

A x6
Ø6x33.5mm

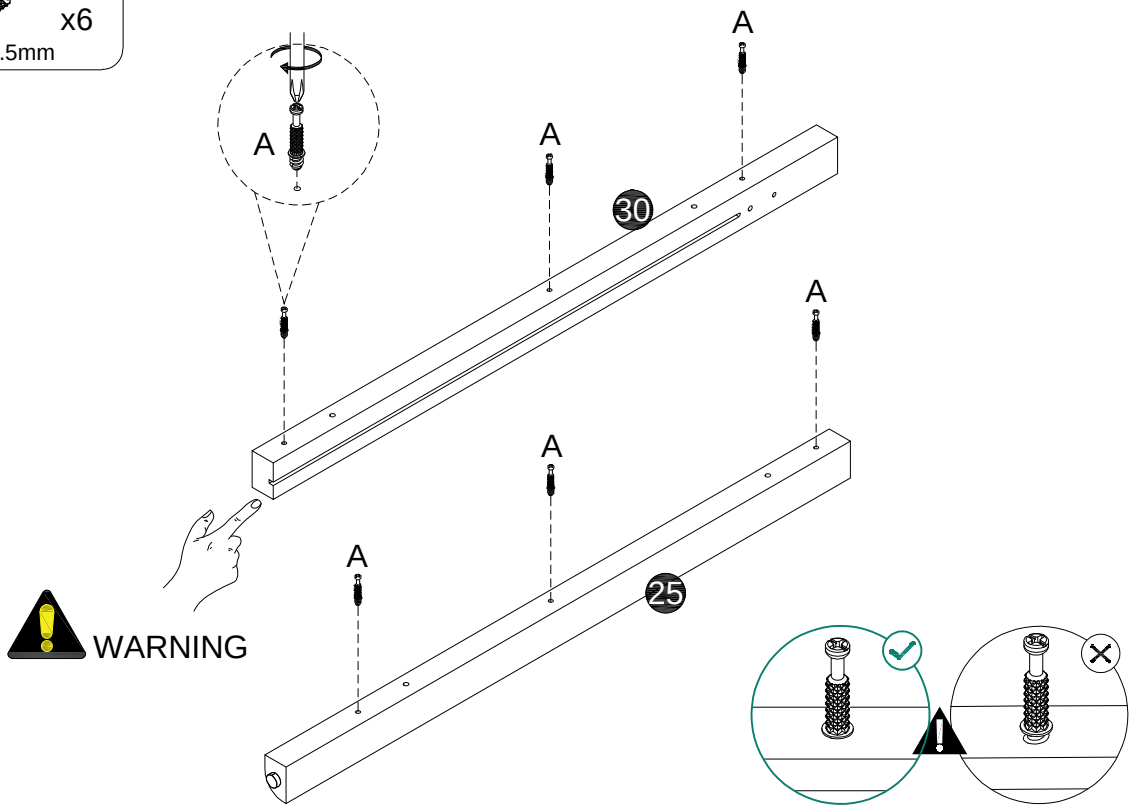

22

B x6
Ø15x9.5mm

C x4
Ø6x30mm

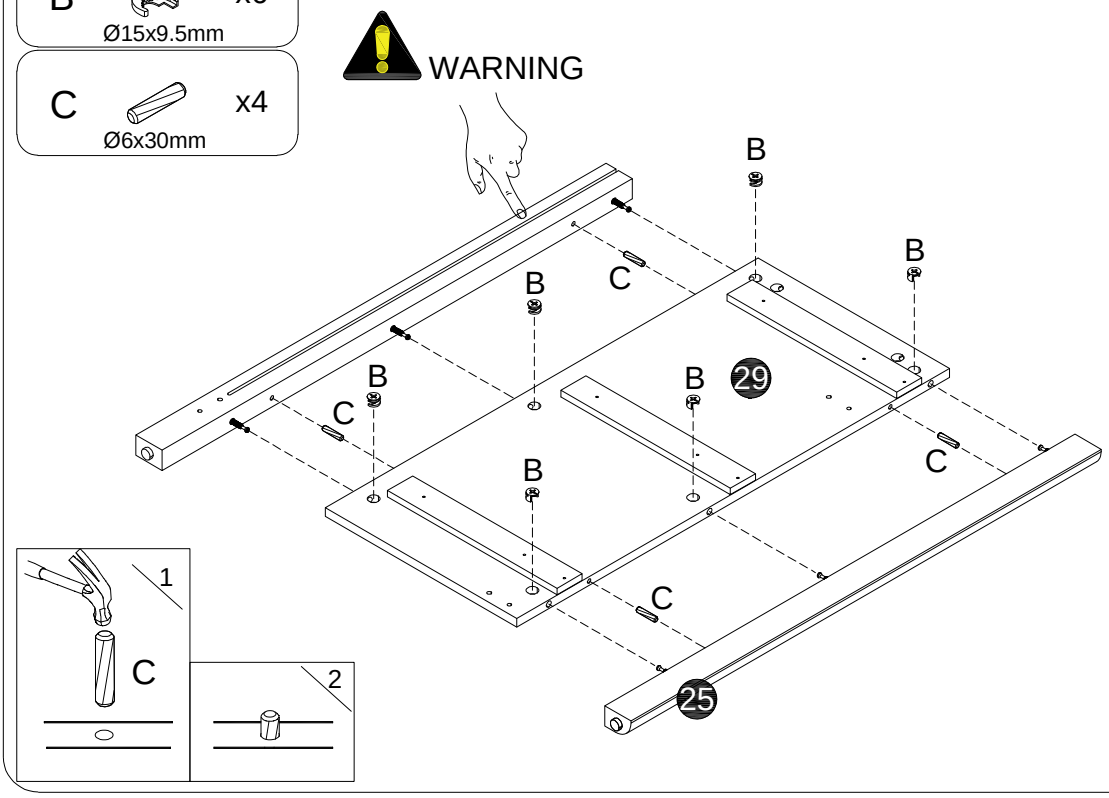

23

D x9
Ø3.5x12mm

E1 x3

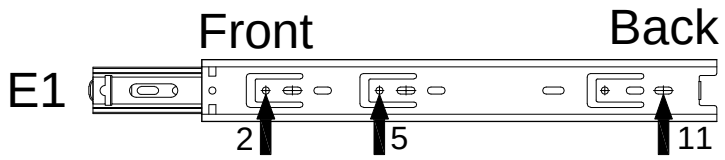

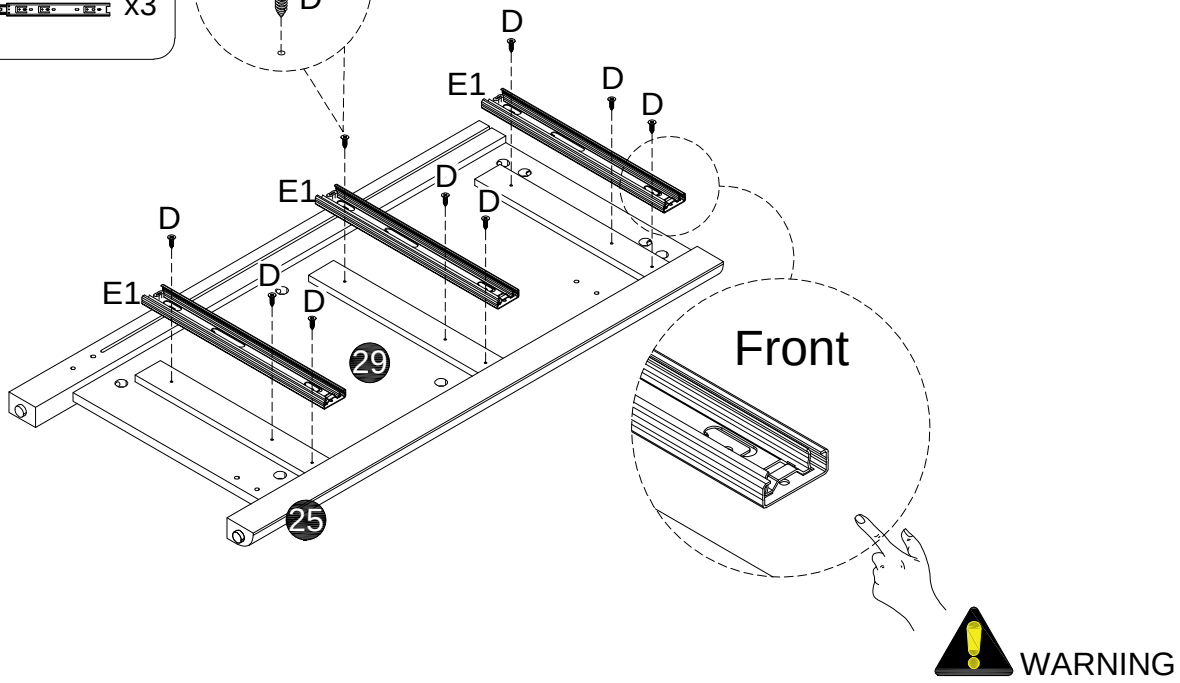

WARNING

24

A x3
Ø6x33.5mm

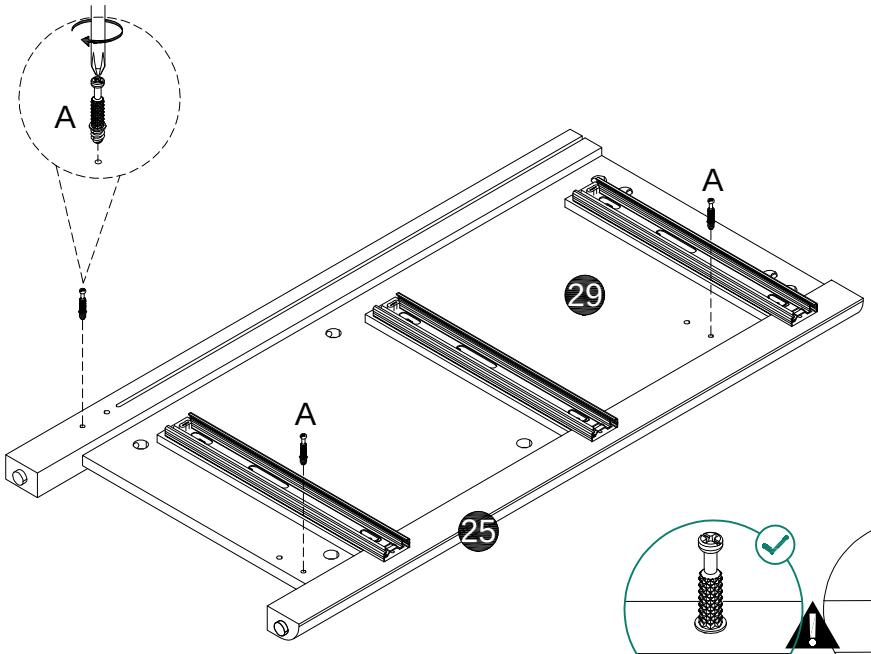

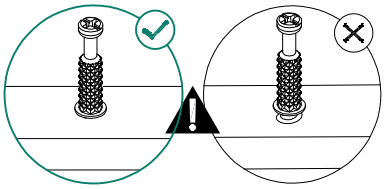

25

B x3
Ø15x9.5mm

C x3
Ø6x30mm

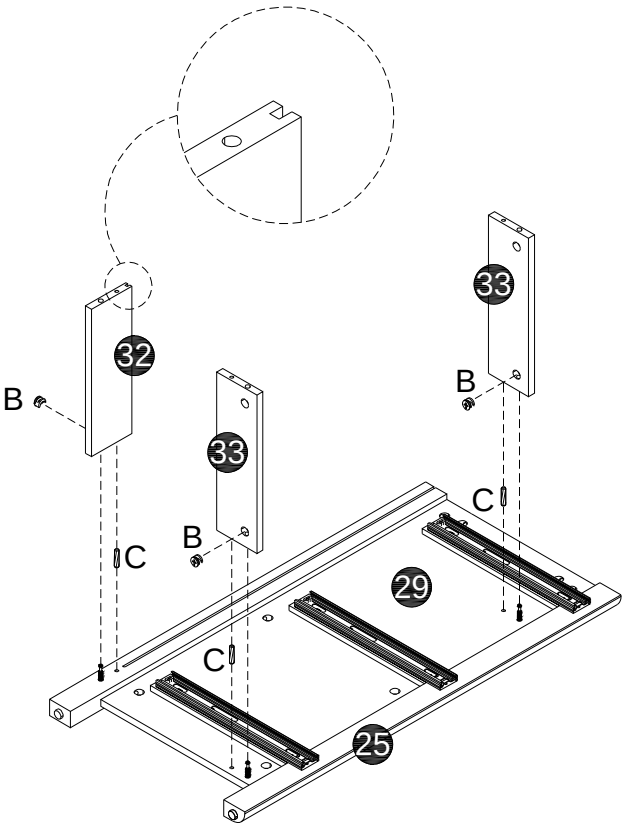

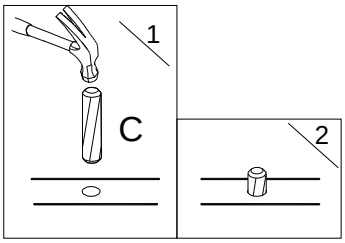

26

B x3
Ø15x9.5mm

C x3
Ø6x30mm

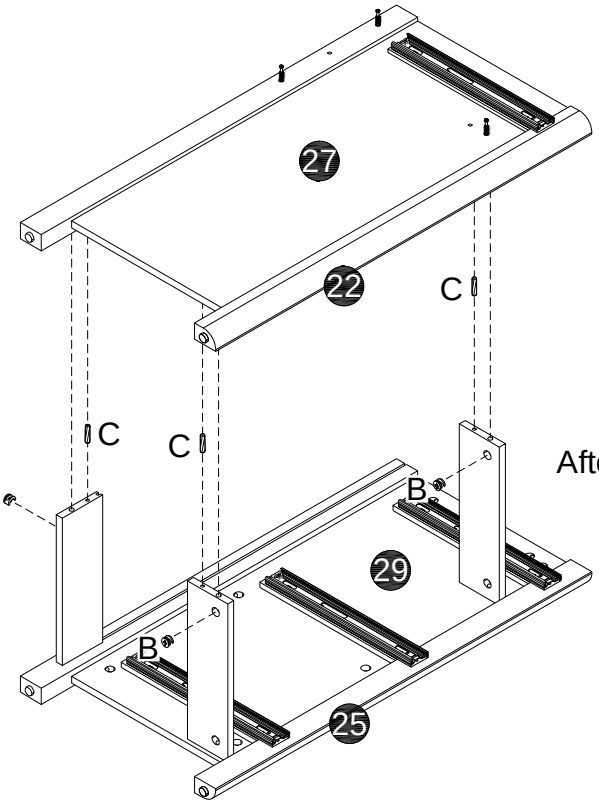

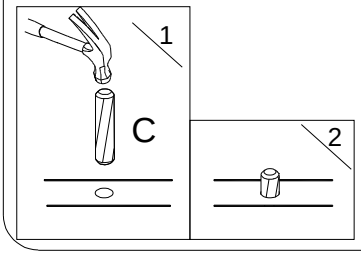

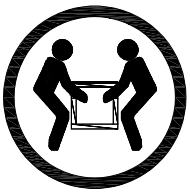

CAUTION: Heavy! You may need assistance with this step

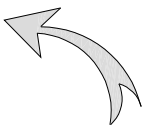

After this step is assembled, flip it 90 degrees

27

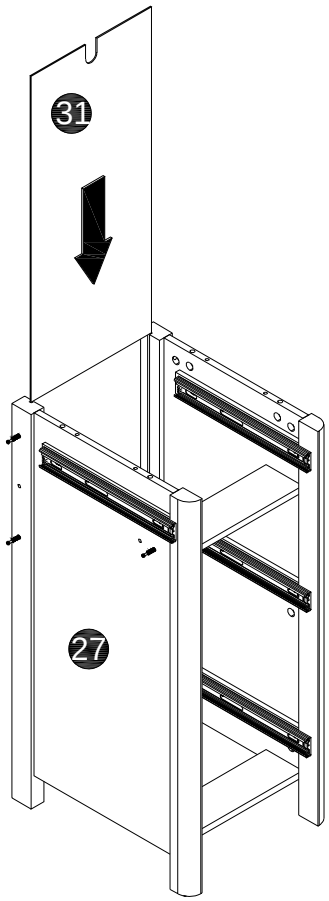

28

B		x3
	Ø15x9.5mm	
C		x2
	Ø6x30mm	

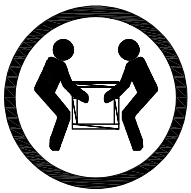

CAUTION: Heavy! You may need assistance with this step

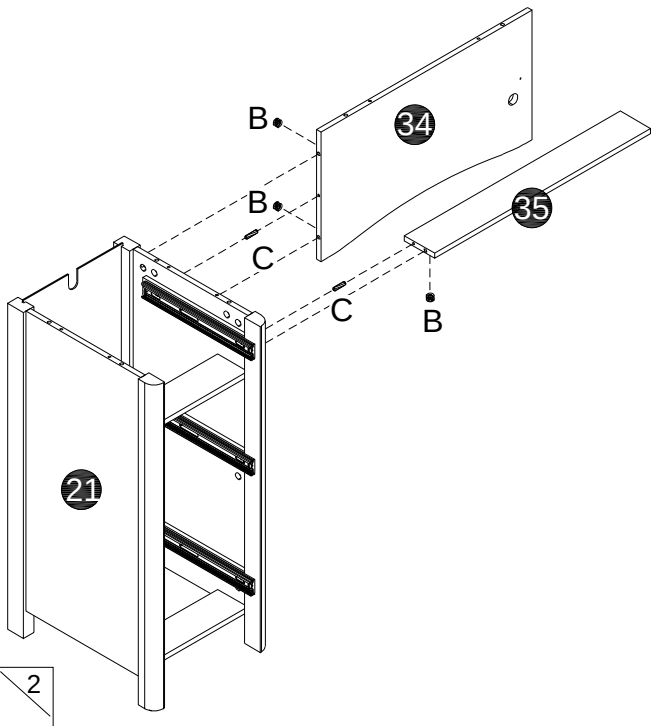

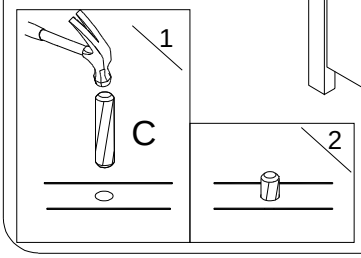

29

B x3
Ø15x9.5mm

C x2
Ø6x30mm

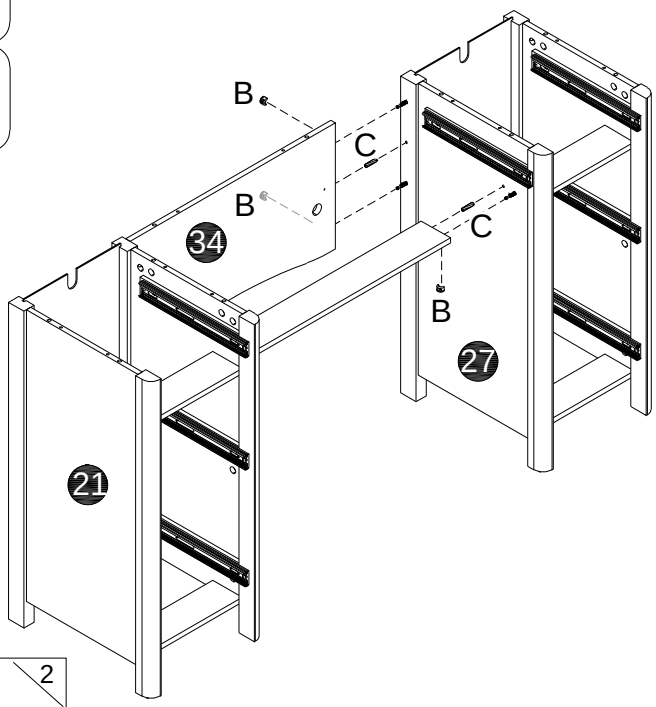

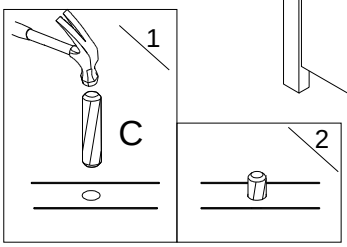

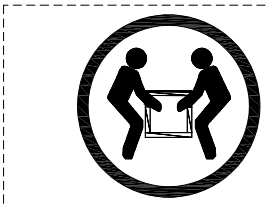

CAUTION: Heavy! You may need assistance with this step

30

A x2
Ø6x33.5mm

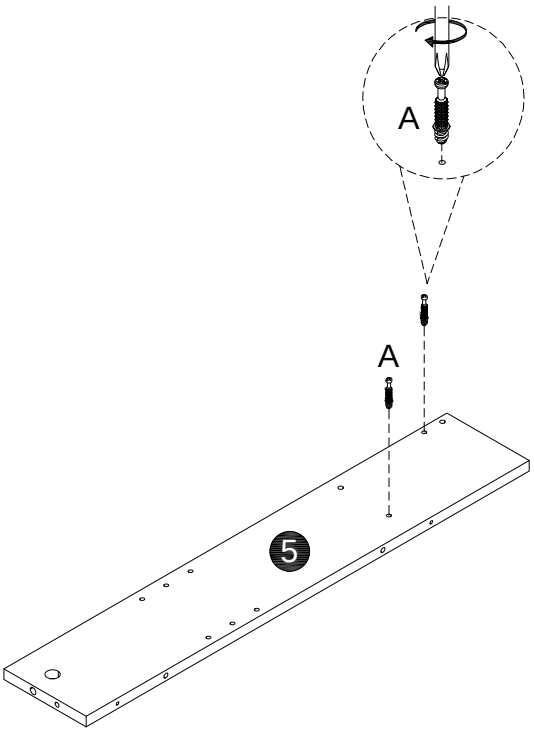

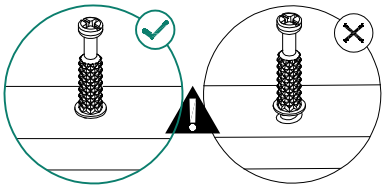

31

B  x1
Ø15x9.5mm

C  x1
Ø6x30mm

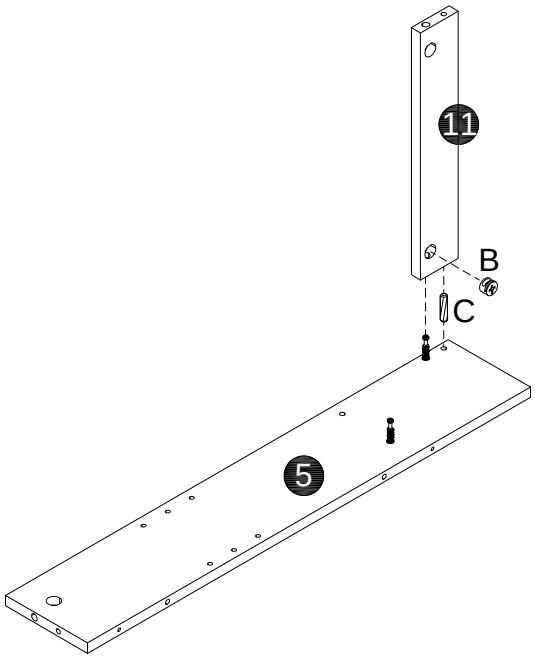

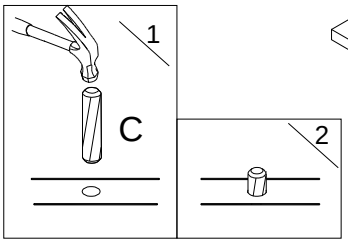

32

B  x1
Ø15x9.5mm

C  x1
Ø6x30mm

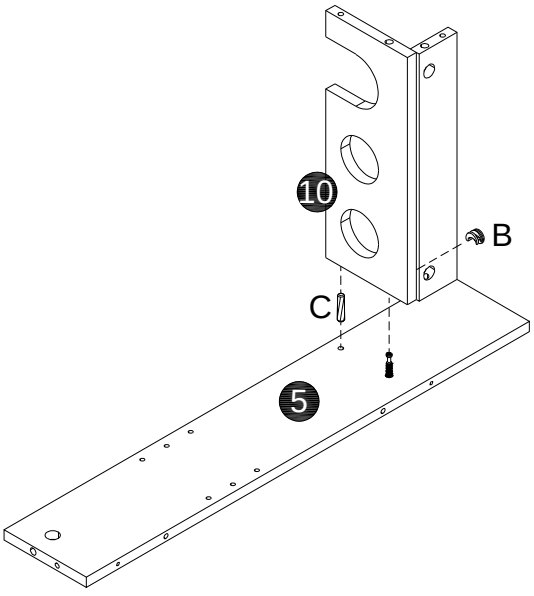

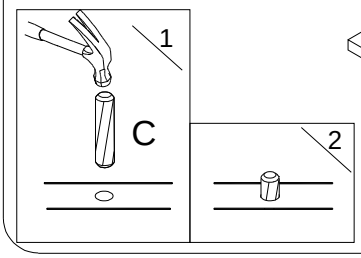

33

A x1
Ø6x33.5mm

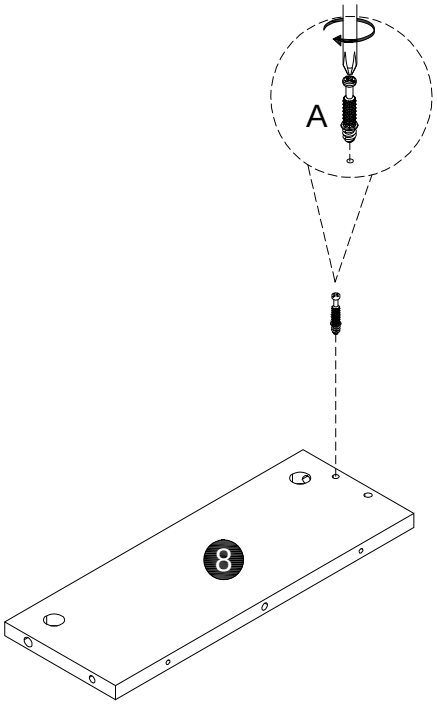

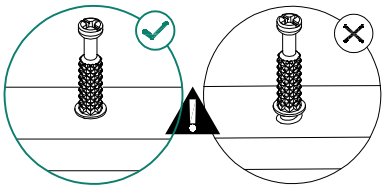

34

B x1
Ø15x9.5mm

C x1
Ø6x30mm

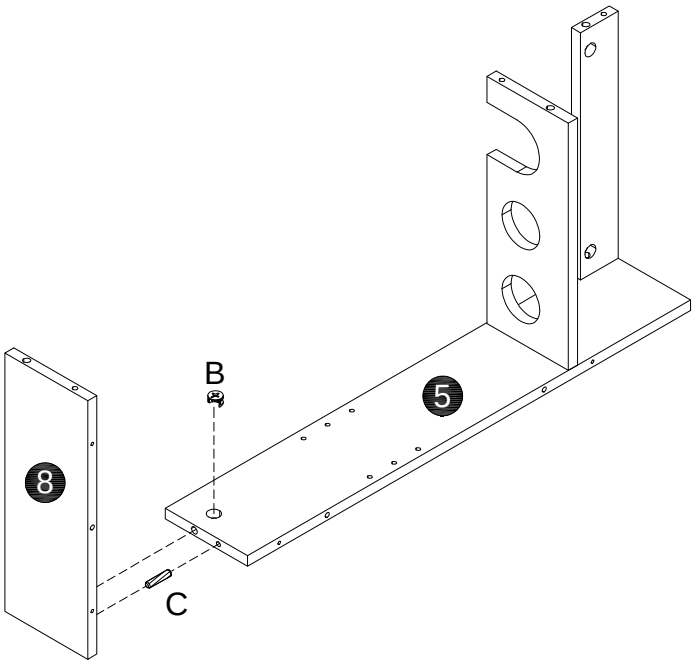

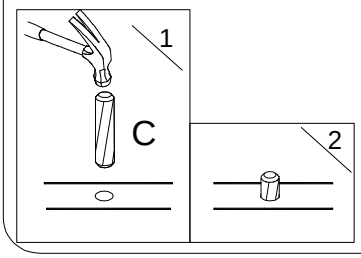

35

A x3
Ø6x33.5mm

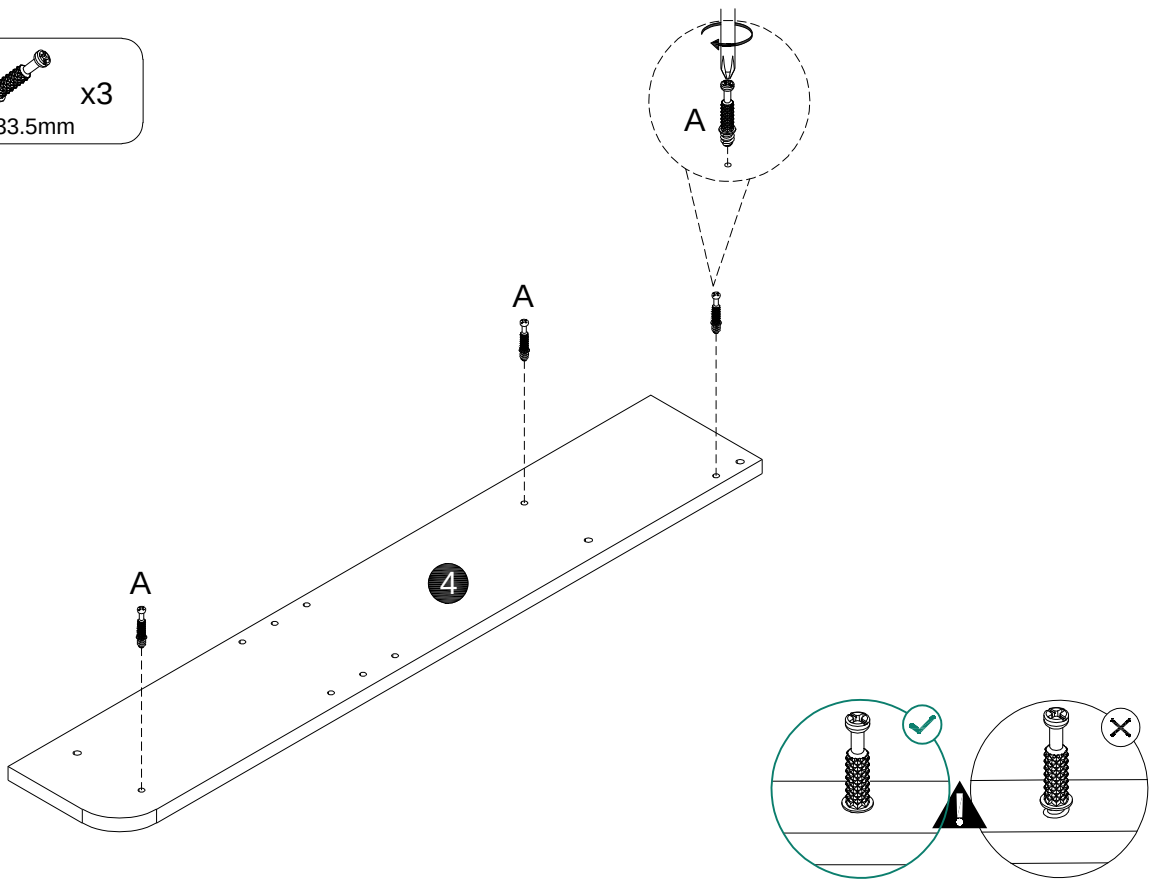

36

B x3
Ø15x9.5mm

C x3
Ø6x30mm

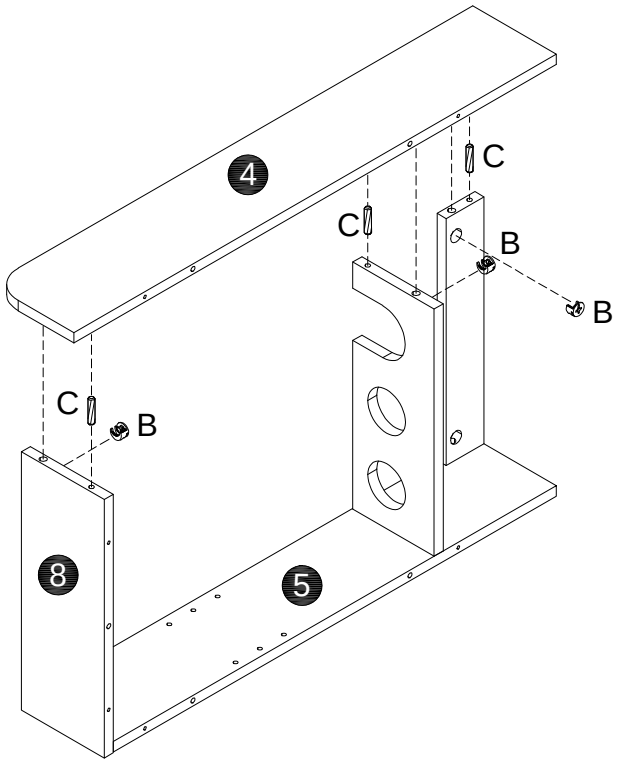

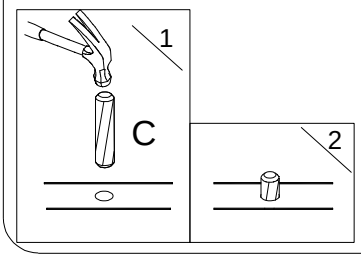

37

C x5
Ø6x30mm

F x6
Ø5x50mm

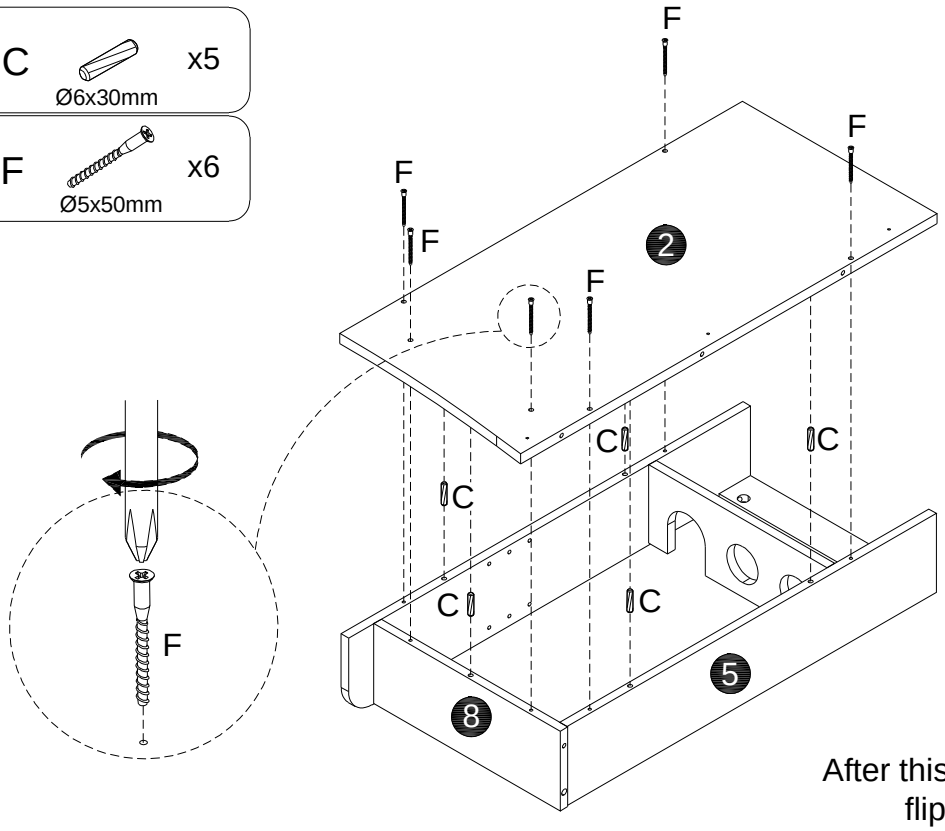

After this step is assembled,
flip it 90 degrees

38

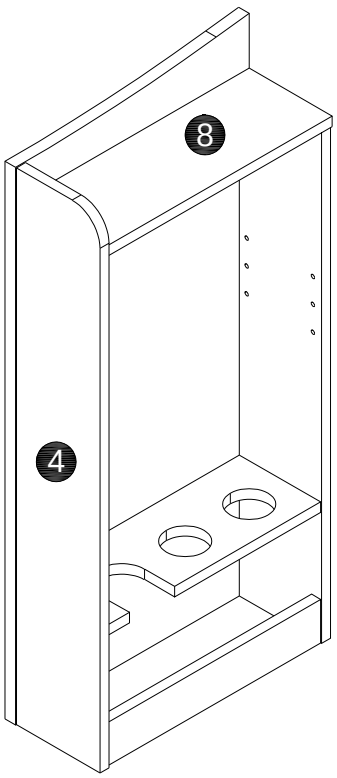

39

A x9
Ø6x33.5mm

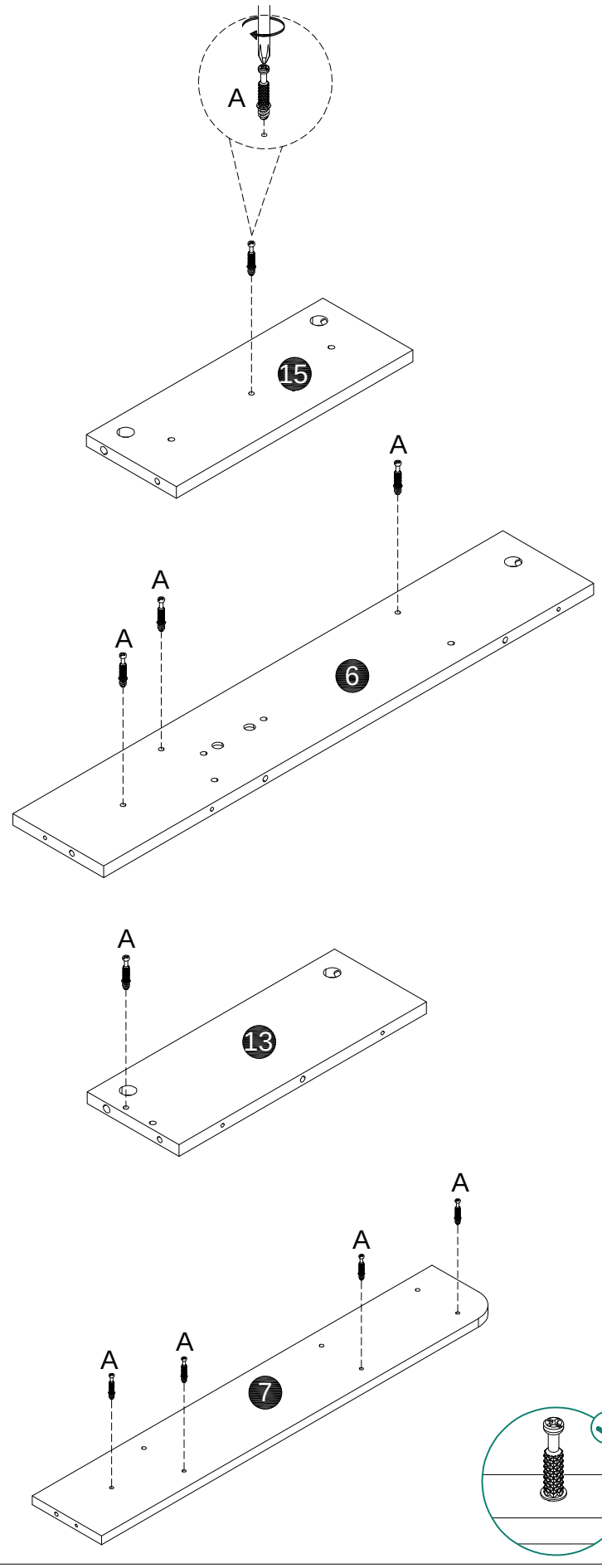

40

B  x1
Ø15x9.5mm

C  x2
Ø6x30mm

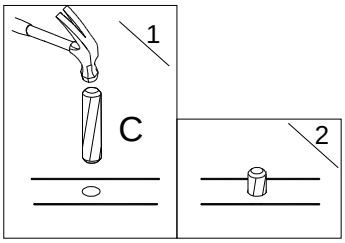

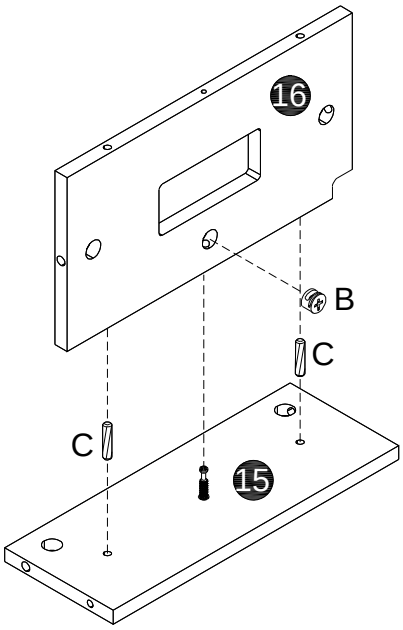

41

B  x2
Ø15x9.5mm

C  x1
Ø6x30mm

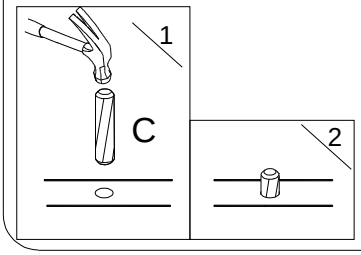

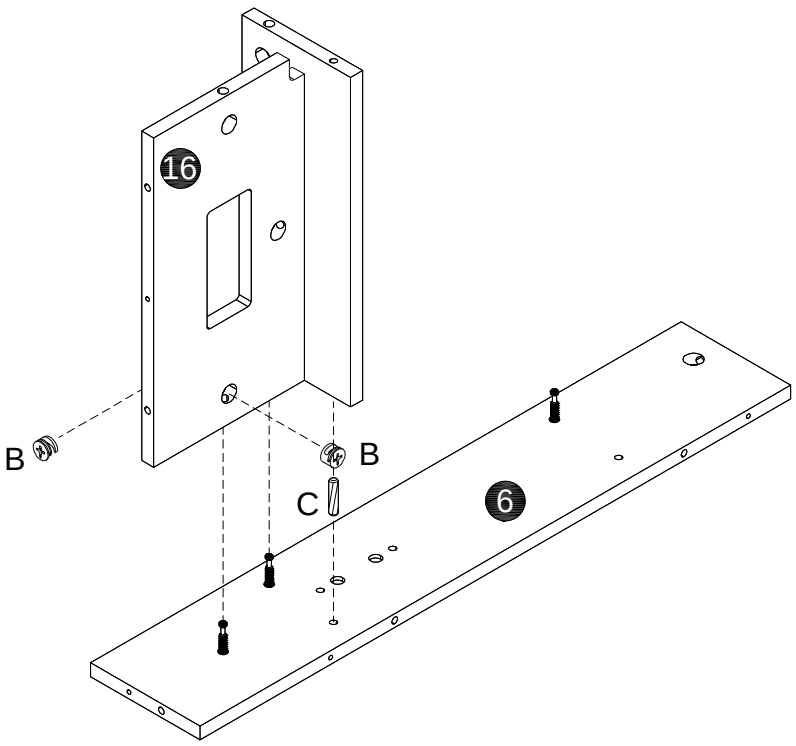

42

B x1
Ø15x9.5mm

C x1
Ø6x30mm

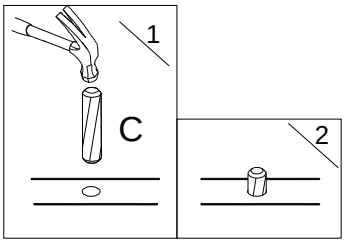

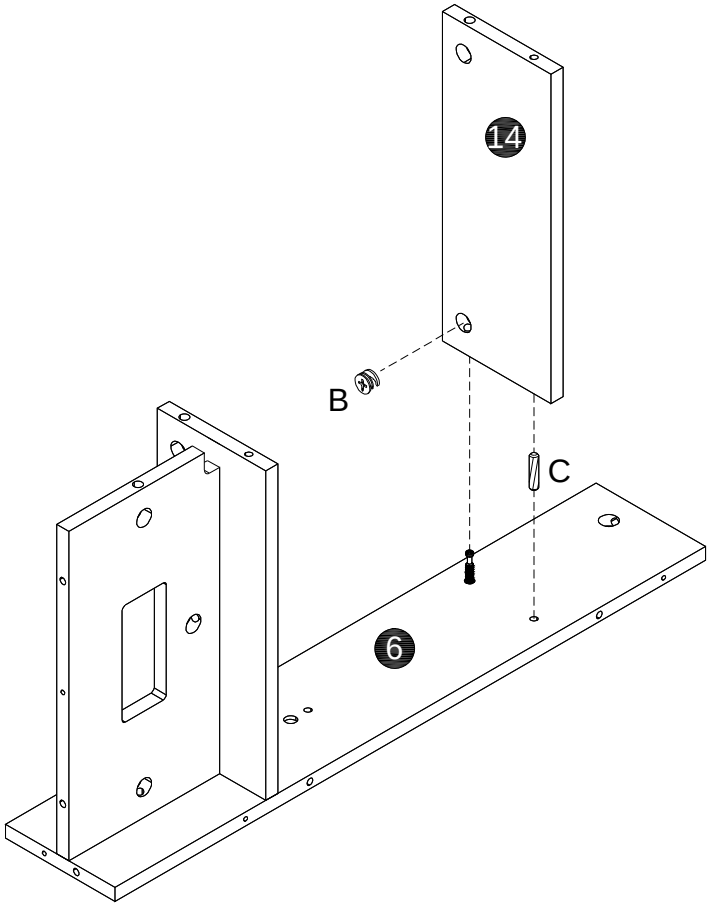

43

B x1
Ø15x9.5mm

C x1
Ø6x30mm

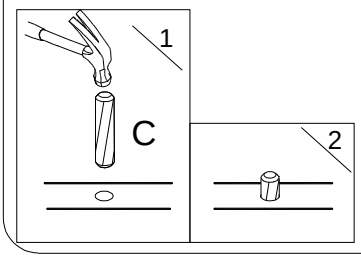

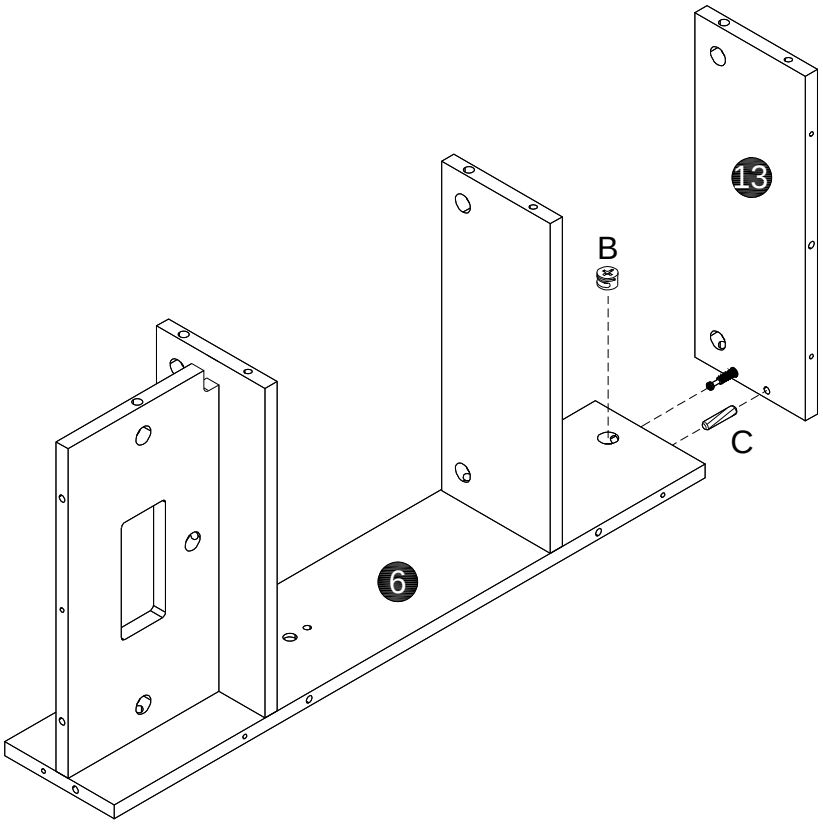

44

B x4
Ø15x9.5mm

C x3
Ø6x30mm

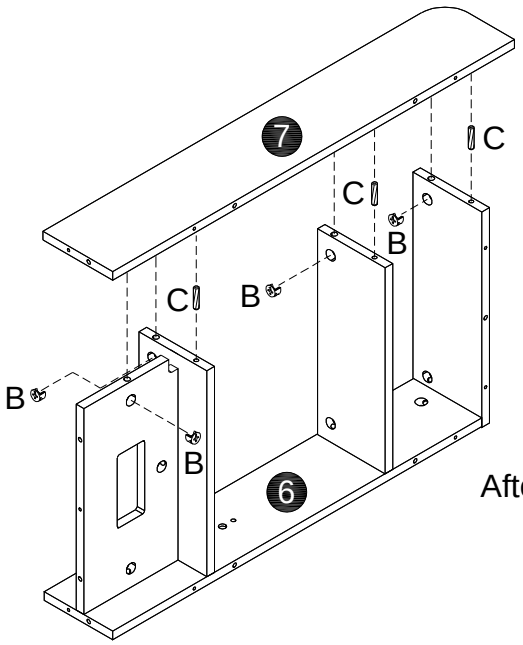

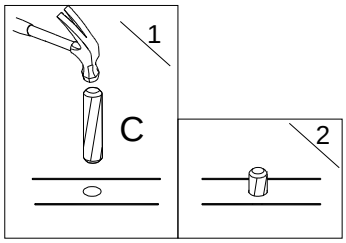

After this step is assembled,
flip it 90 degrees

45

C x5
Ø6x30mm

F x6
Ø5x50mm

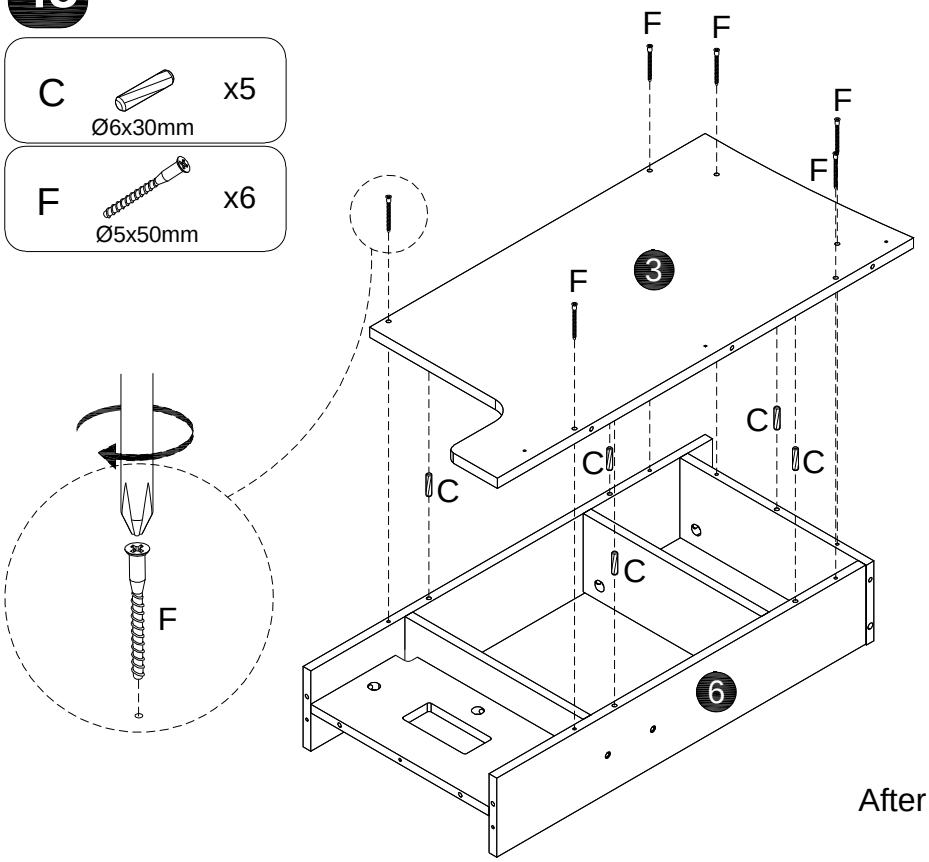

After this step is assembled,
flip it 90 degrees

46

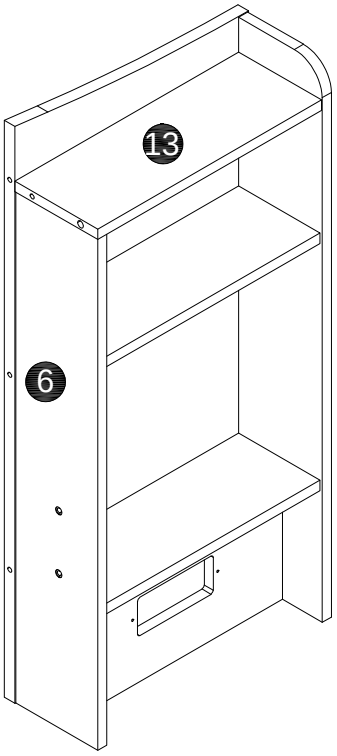

47

A  x2

Ø6x33.5mm

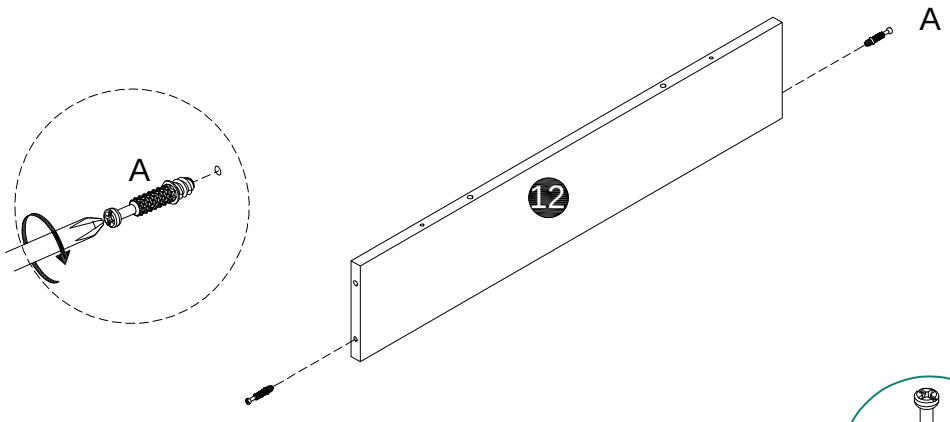

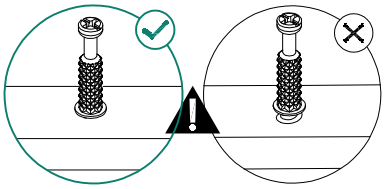

48

C x2
Ø6x30mm

F x2
Ø5x50mm

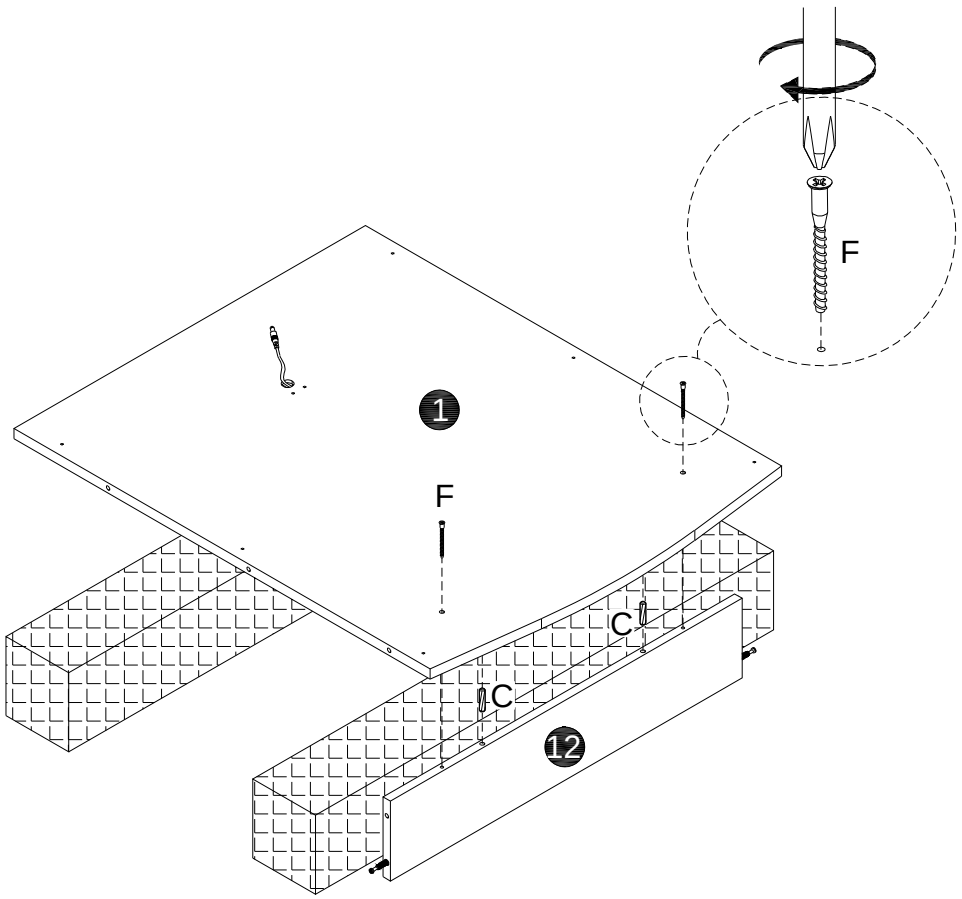

49

B x2
Ø15x9.5mm

C x8
Ø6x30mm

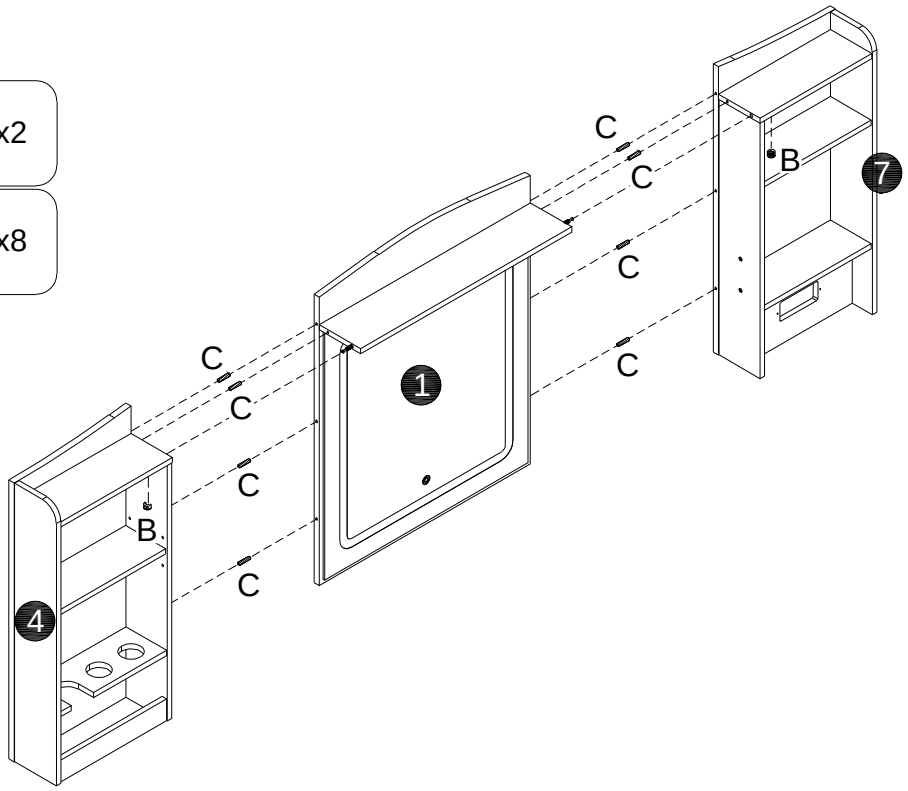

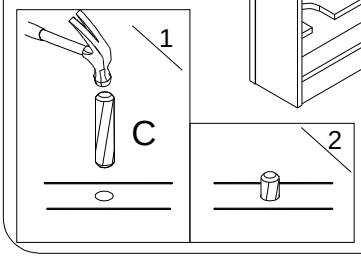

50

D x12
Ø3.5x12mm

M x6

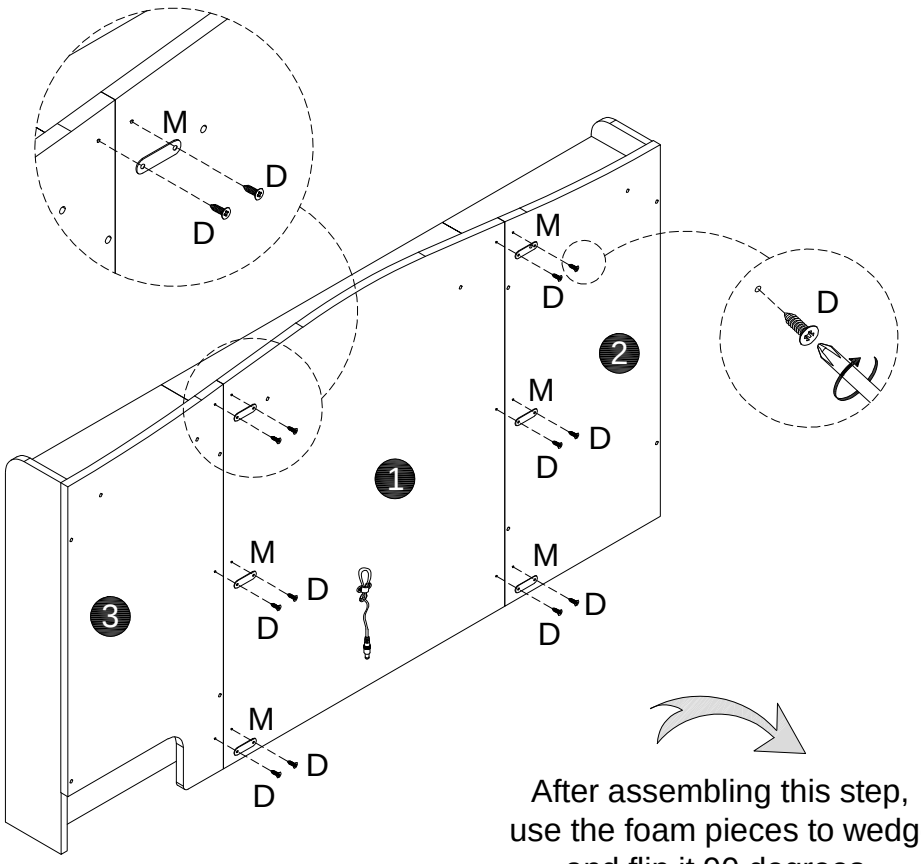

After assembling this step, use the foam pieces to wedge and flip it 90 degrees.

51

A x4
Ø6x33.5mm

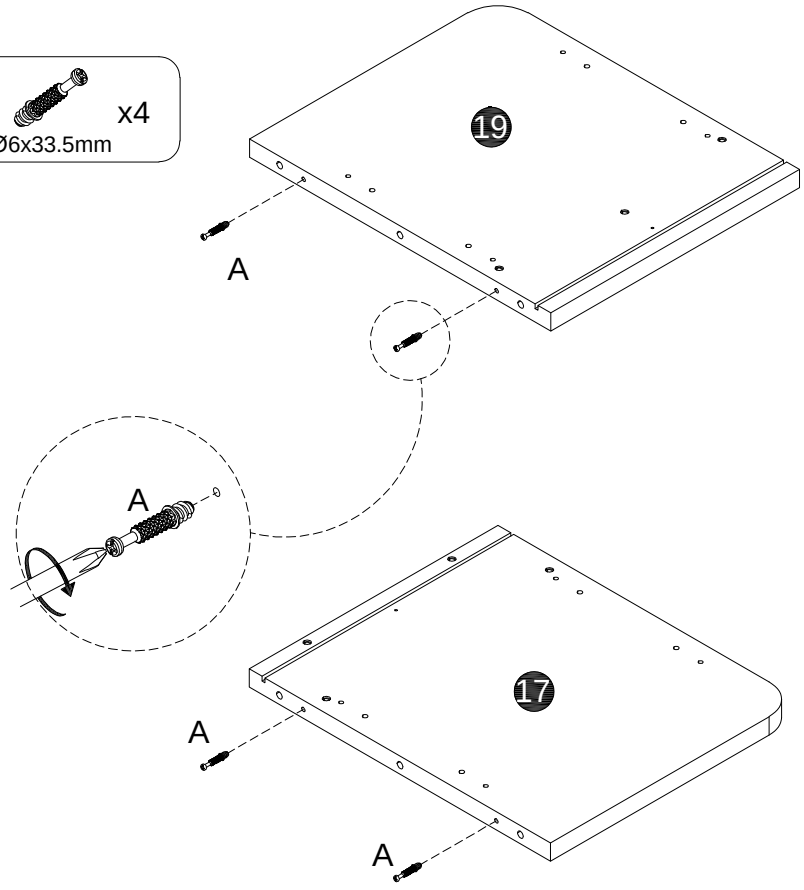

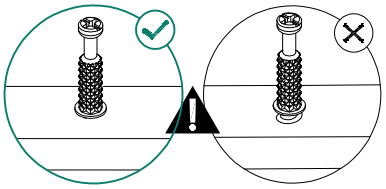

52

B x4
Ø15x9.5mm

S x6
Ø8x50mm

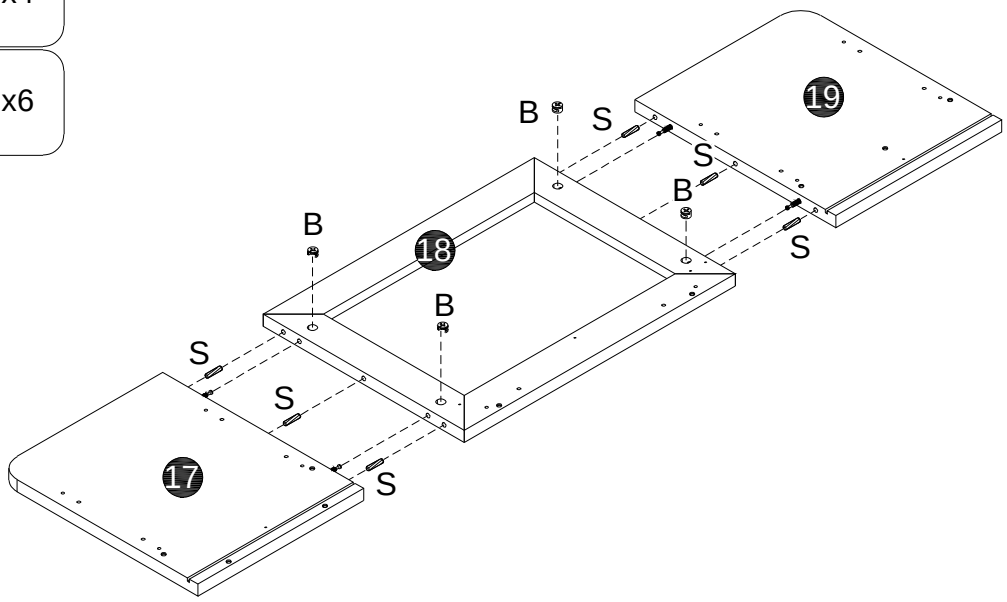

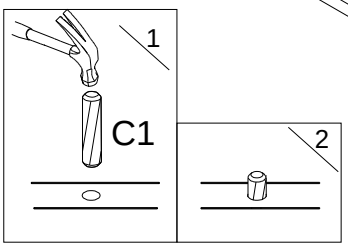

53

N1 x1

N2 x4

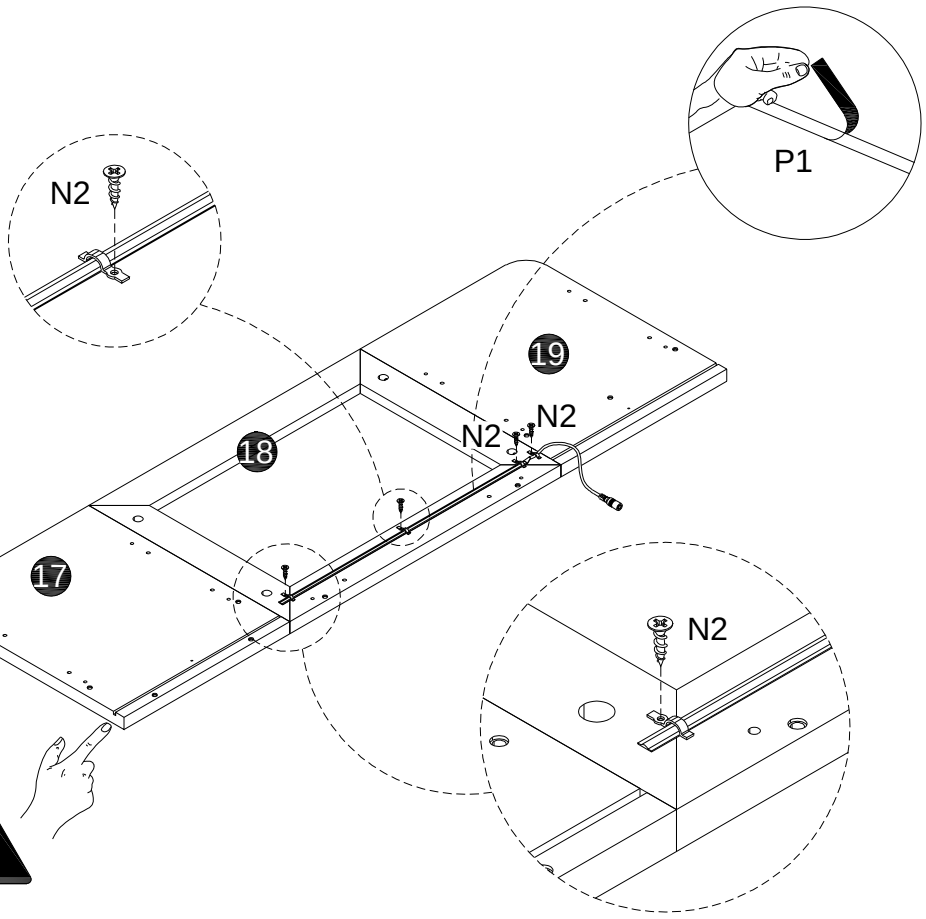

54

C		x9
	Ø6x30mm	
F		x9
	Ø5x50mm	

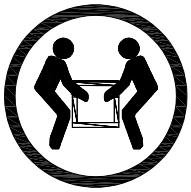

CAUTION: Heavy! You may need assistance with this step

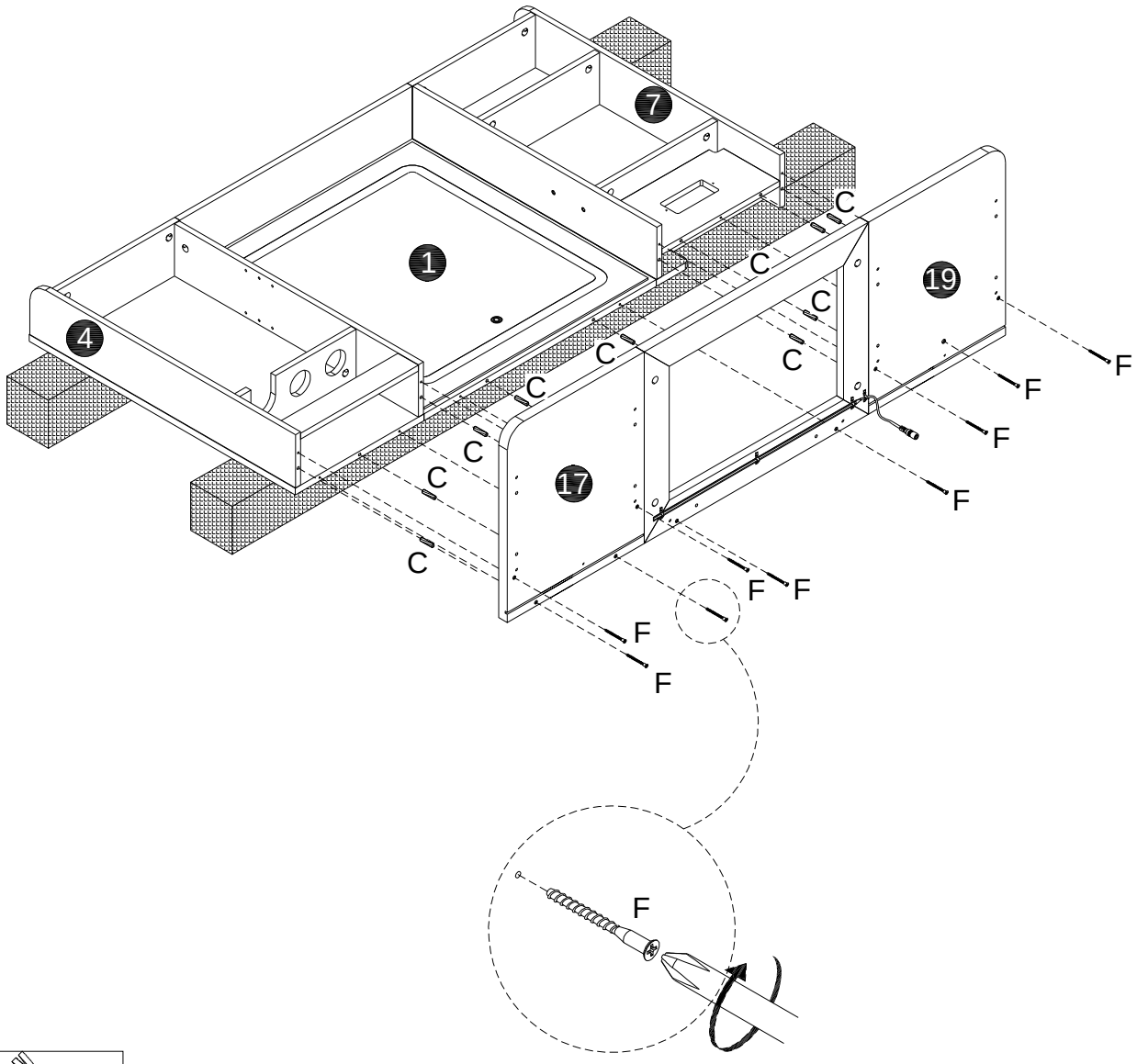

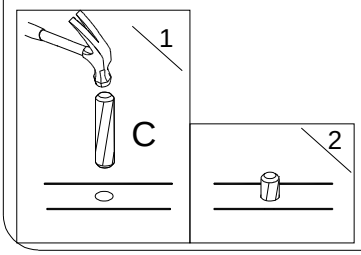

55

A		x10
	Ø6x33.5mm	
H1		x2
	73x25x15mm	
H2		x2
	Ø4x12mm	

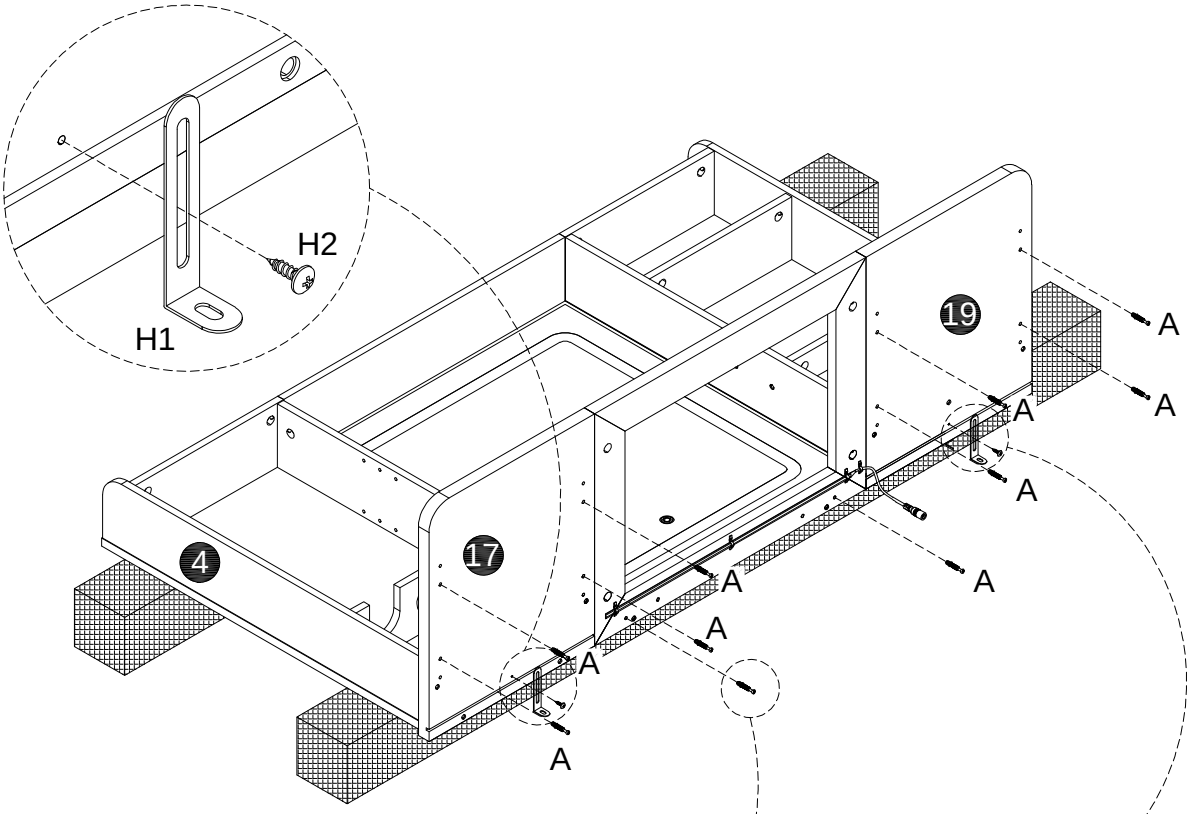

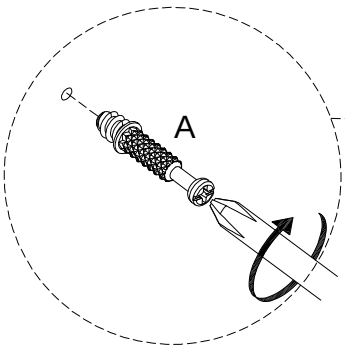

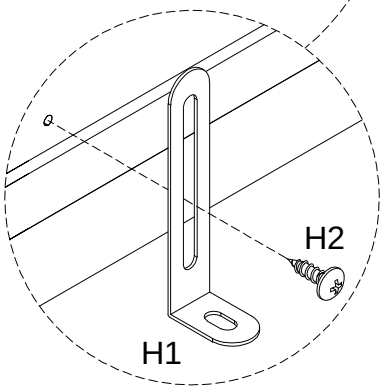

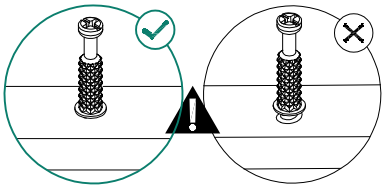

56

B x10
Ø15x9.5mm

C x10
Ø6x30mm

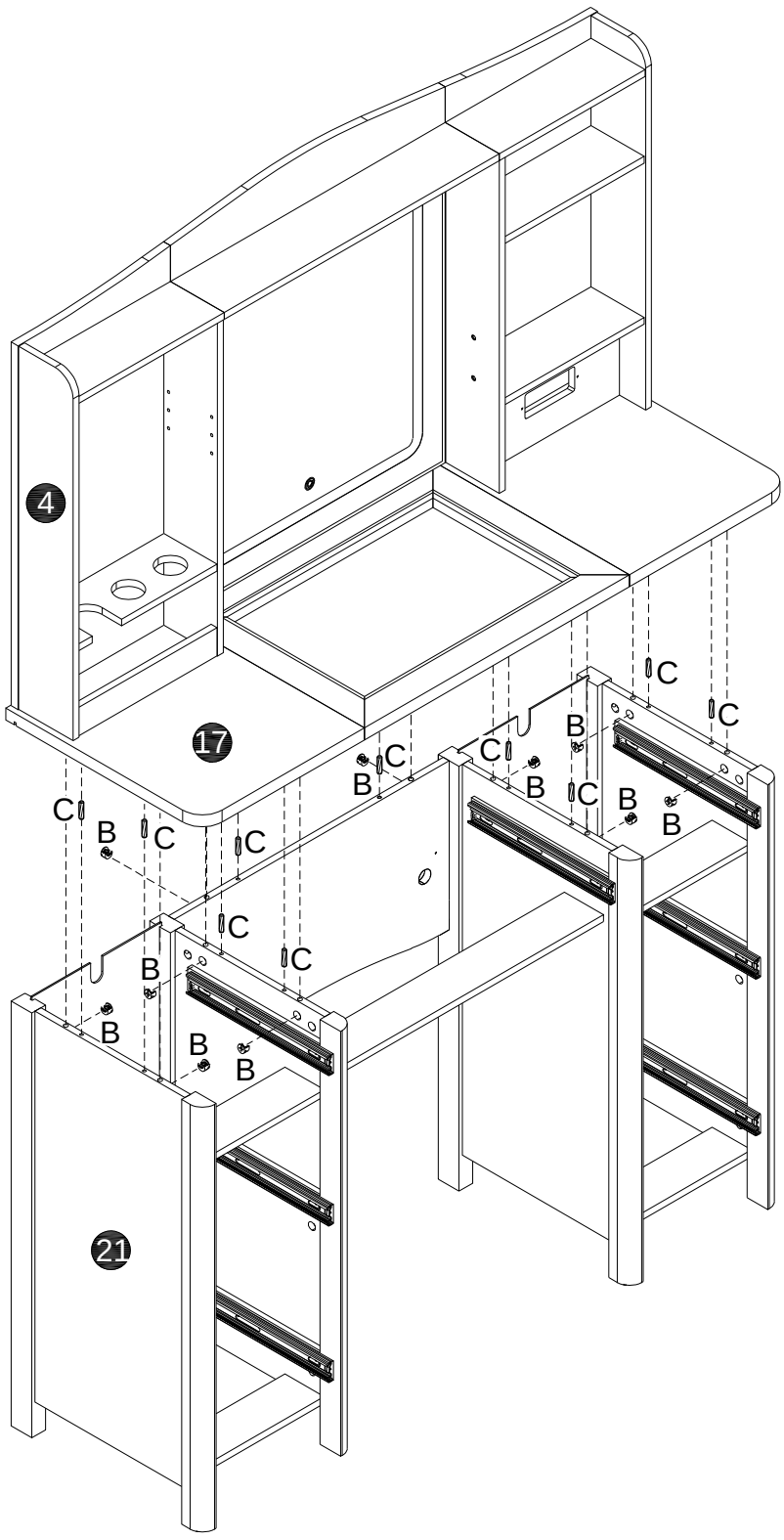

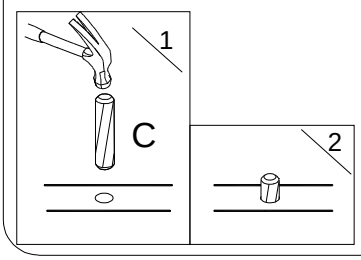

57

N2  x1

N3  x1

When the light strip is connected to a power source, the sensor will detect a person and the light strip will illuminate for approximately 30 seconds. The light will turn off once the person leaves.

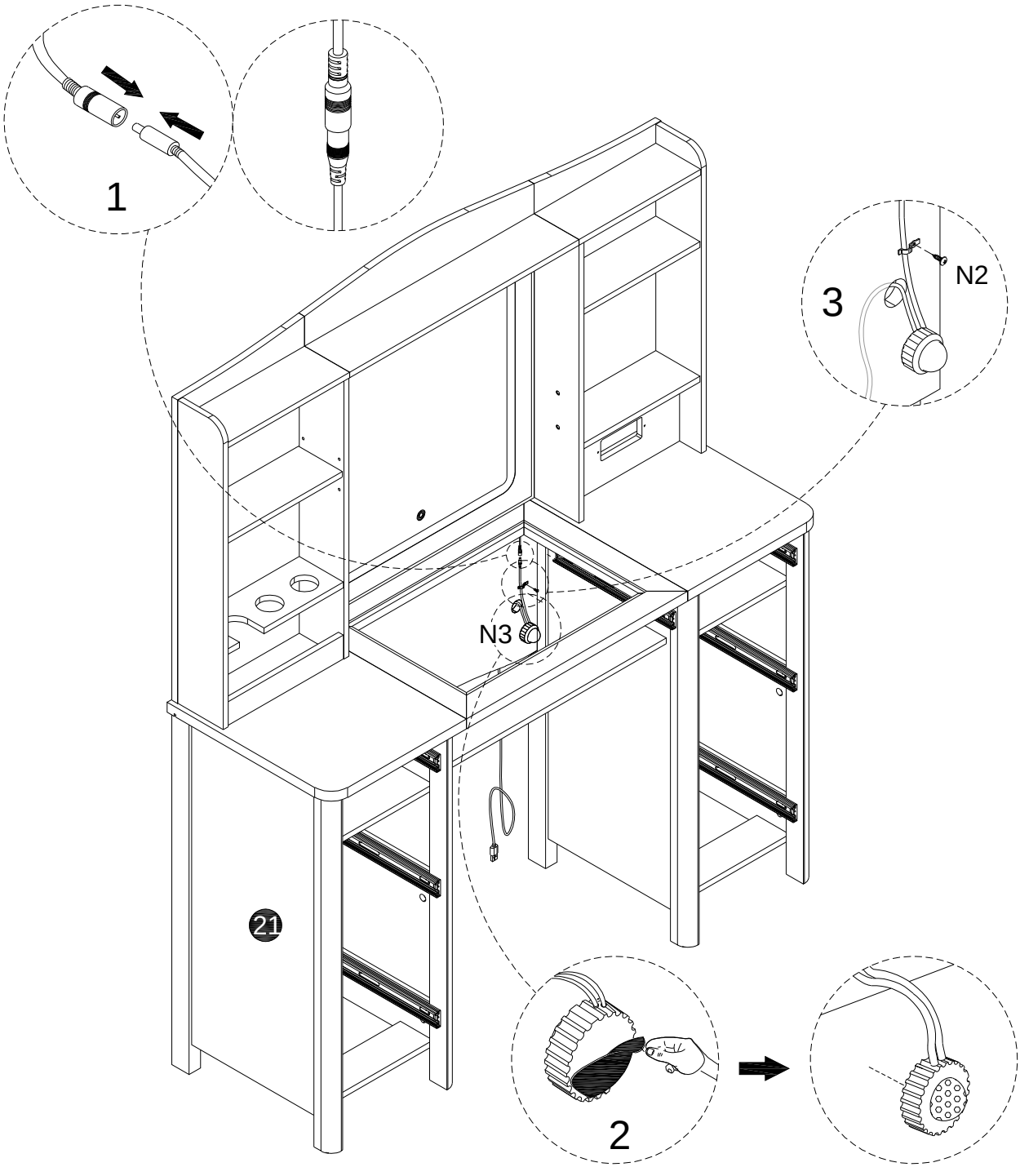

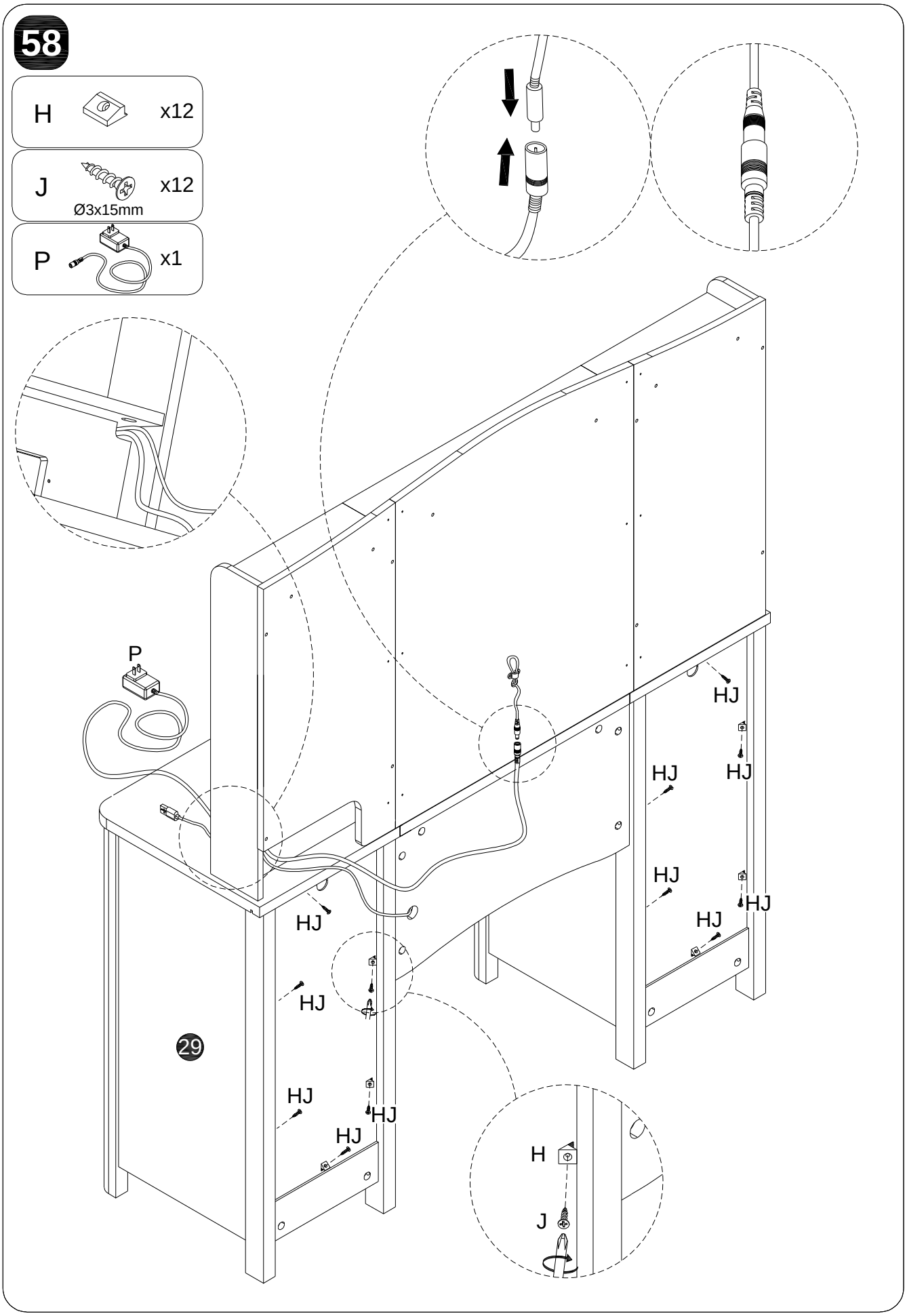
58
H
x12
J
x12
Ø3x15mm
P
x1
P
HJ
HJ
HJ
HJ
HJ
HJ
HJ
HJ
HJ
HJ
HJ
29
H
J

59

Make TWO holes 45MM deep

WALL

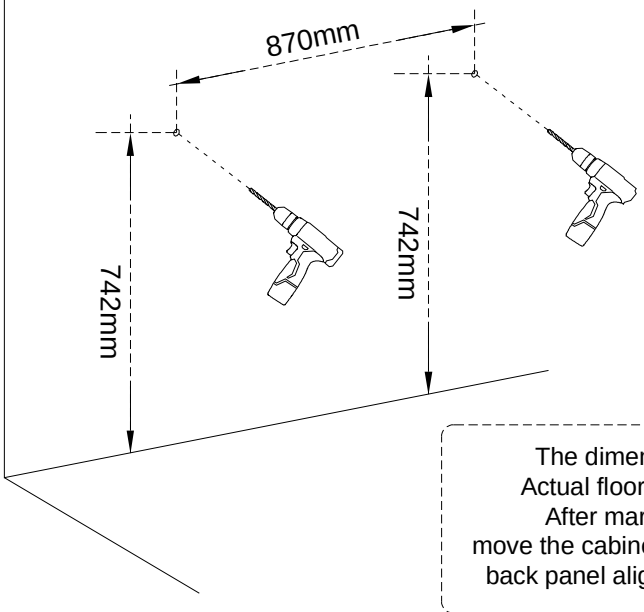

WARNING

The dimensions provided are for reference only.
Actual floor surfaces may vary due to unevenness.
After marking the points on the wall with a pen,
move the cabinet over to check if the holes on the cabinet's
back panel align with the points on the wall before drilling.

60

H3 x2

Ø6x30mm

WALL

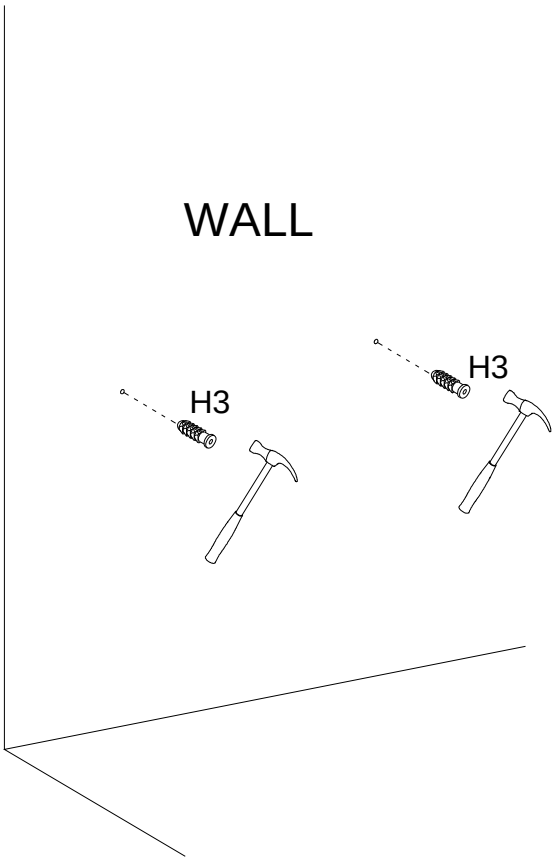

61

H4 x2
Ø4x35mm

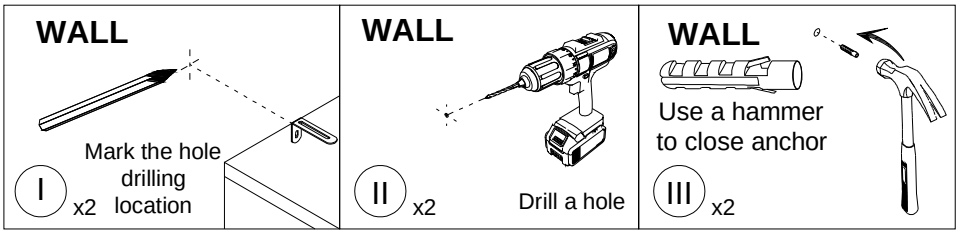

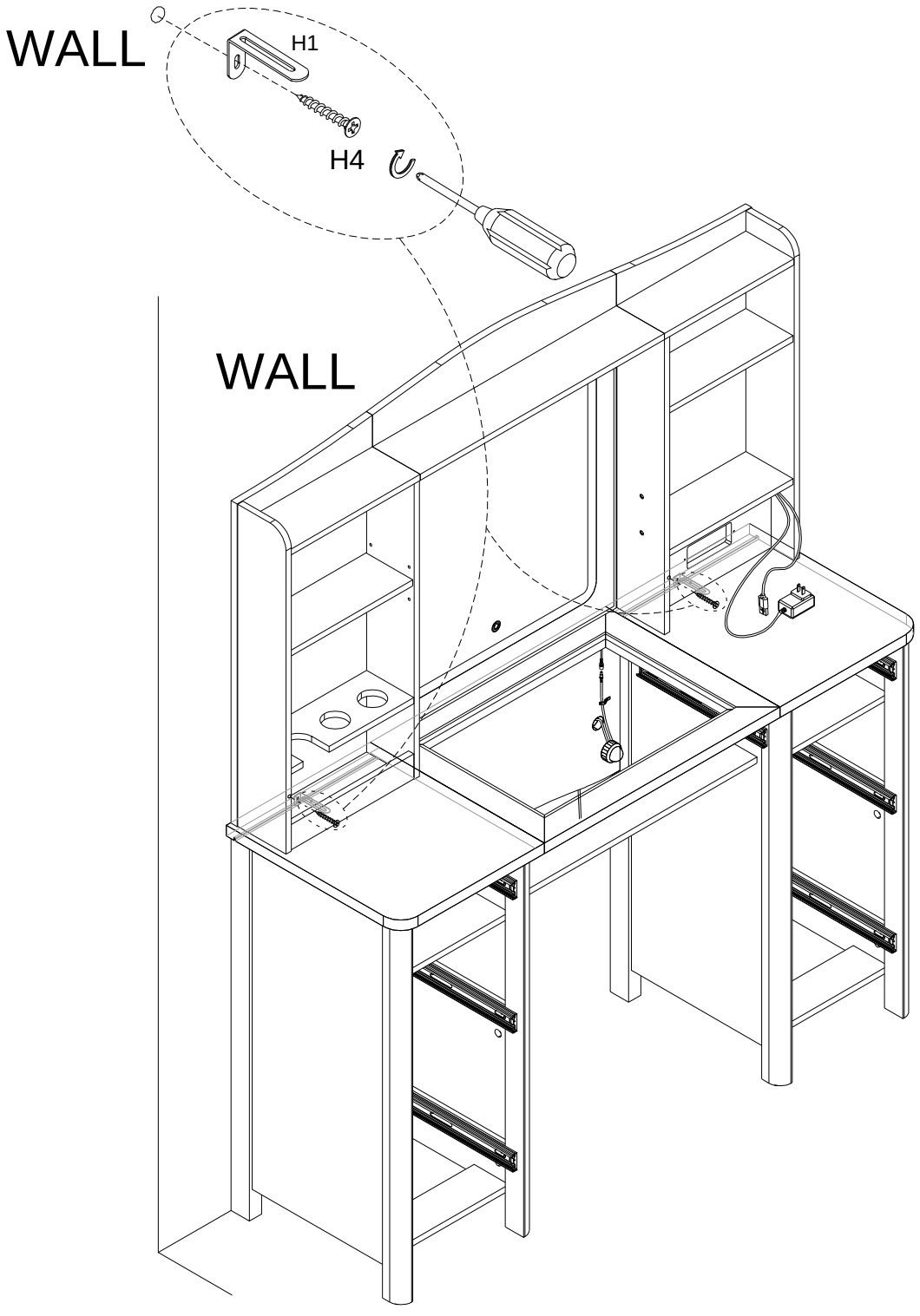

62

O x4

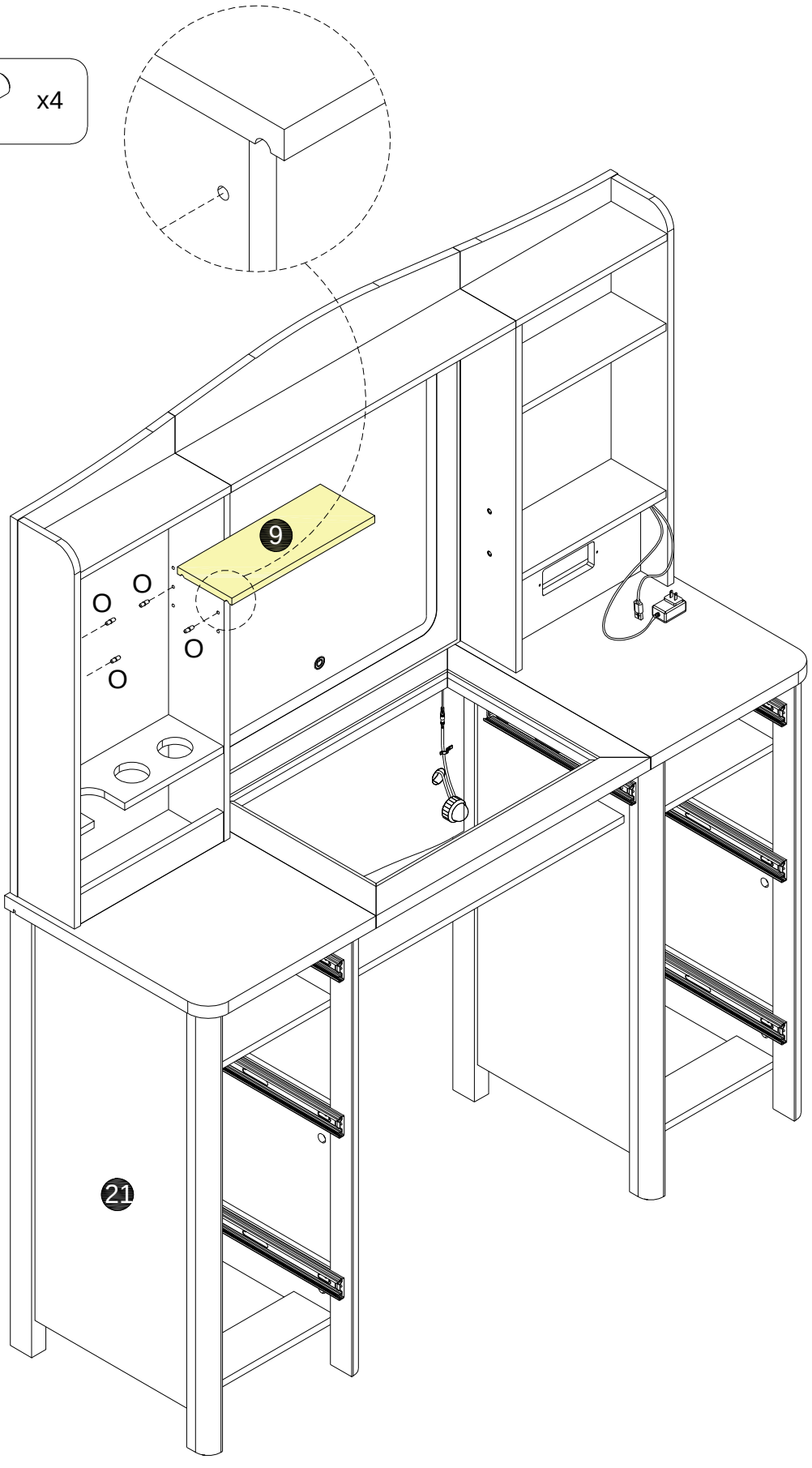

63

Q	 M4x12mm	x2
R		x1

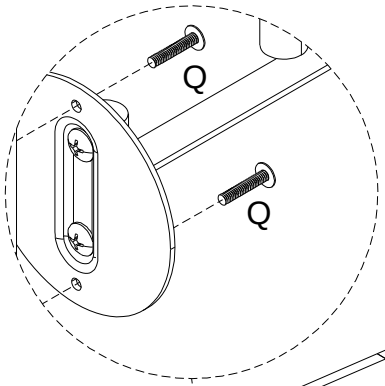

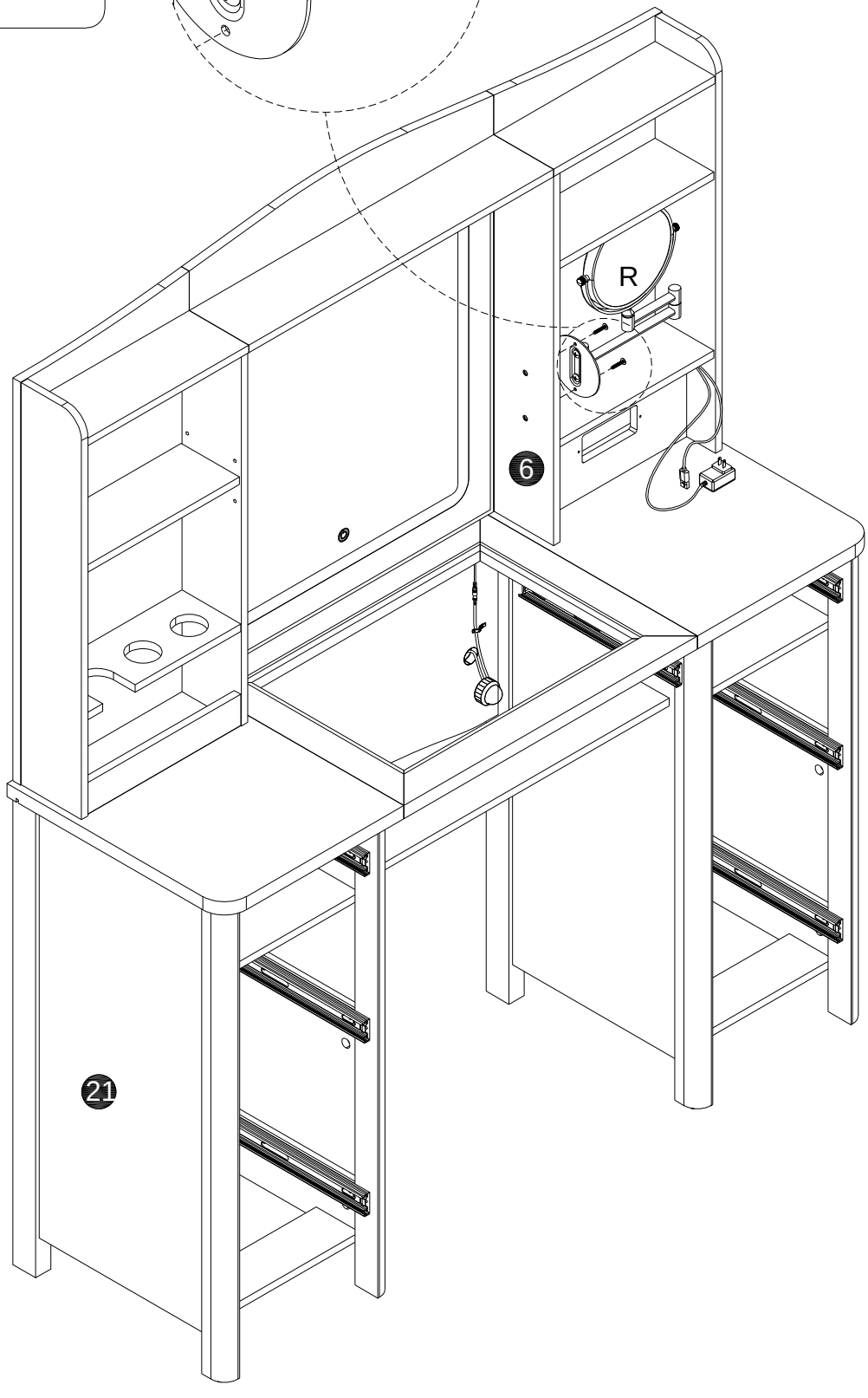

64

D x2
Ø3.5x12mm

G x1

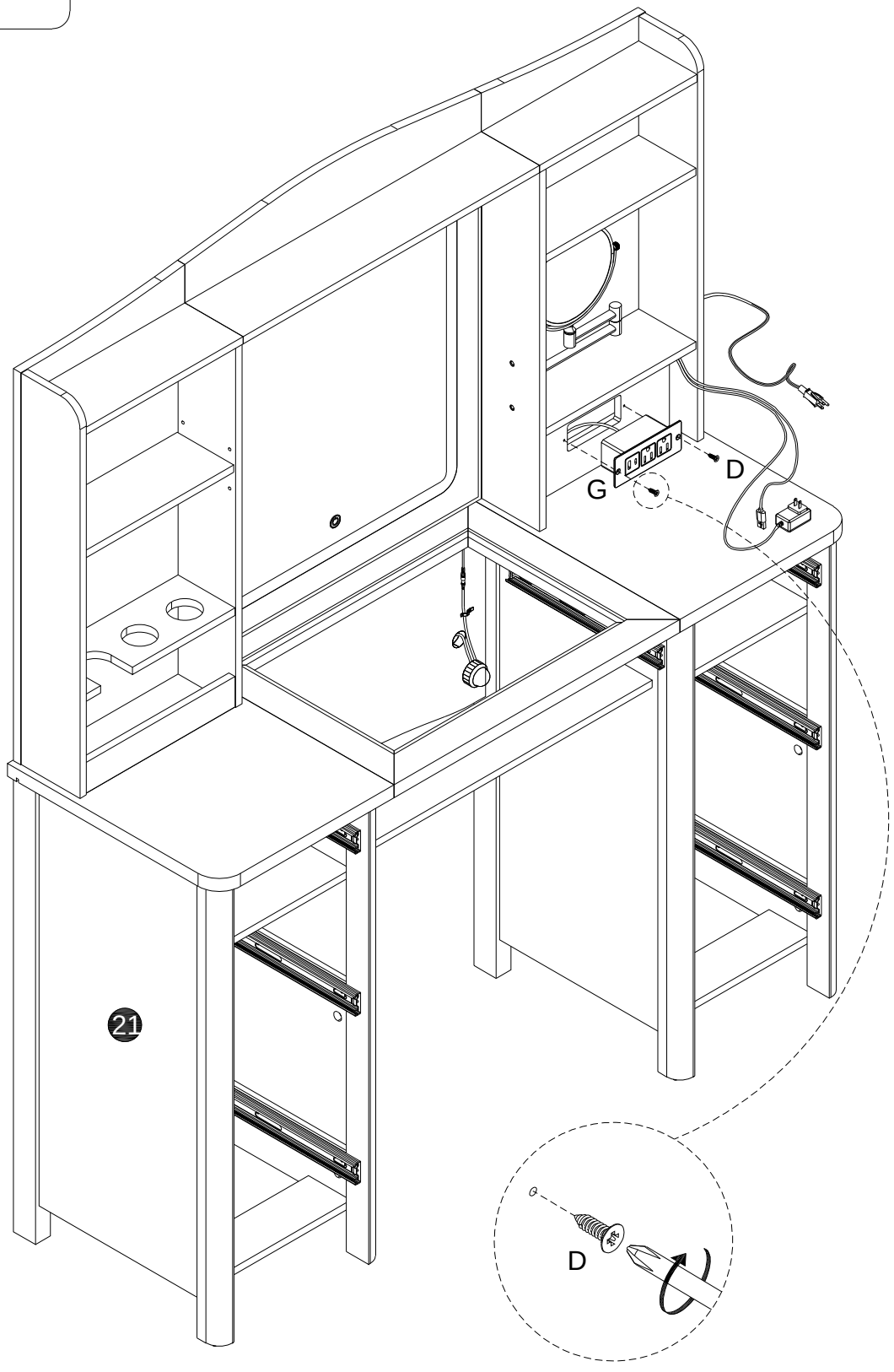

65

A x30
Ø6x33.5mm

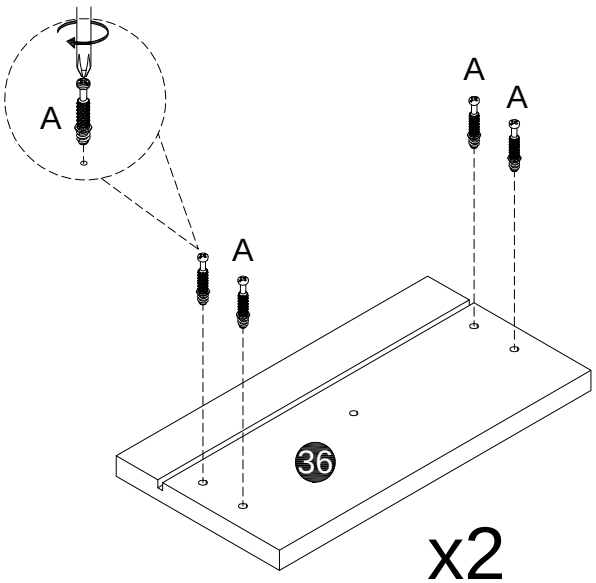

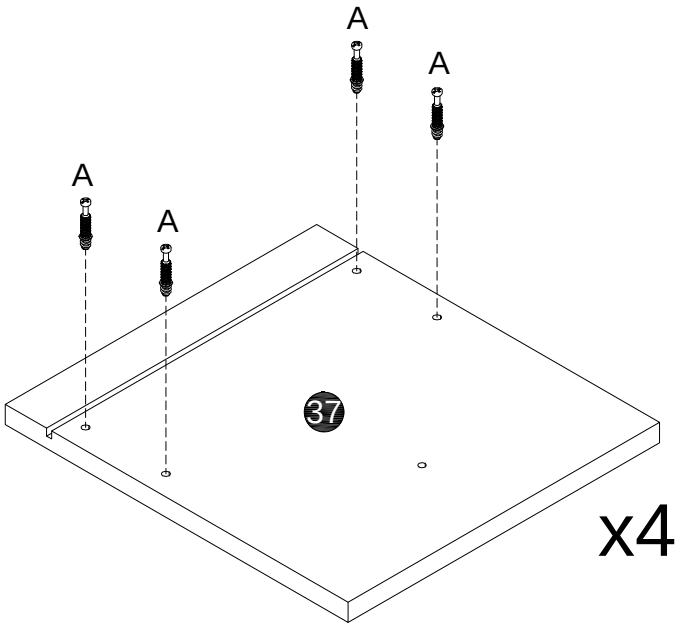

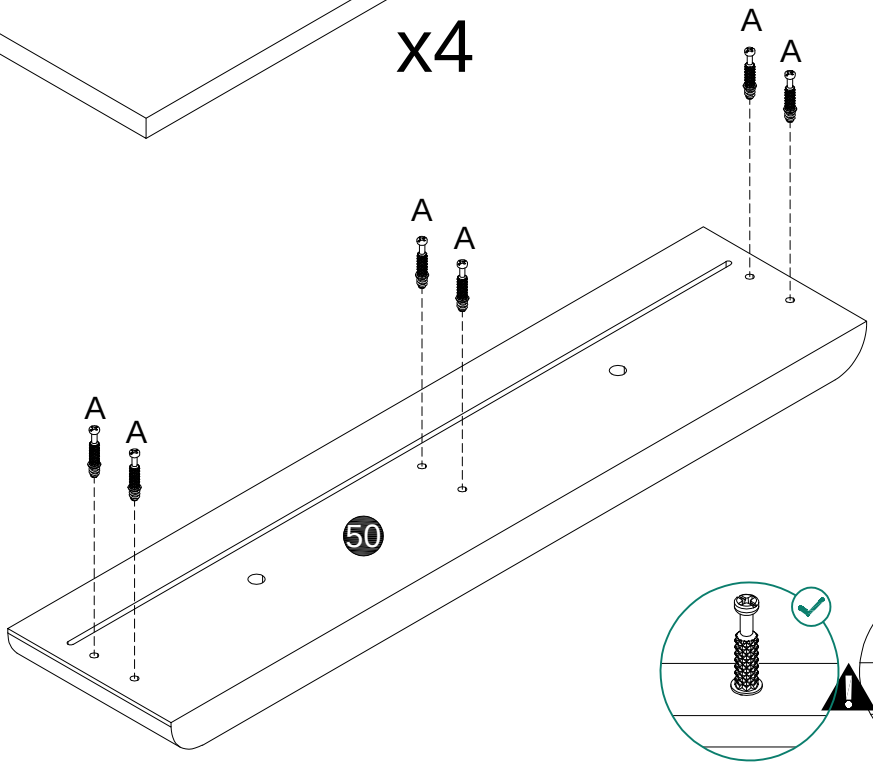

66

T x8
Ø4x38mm

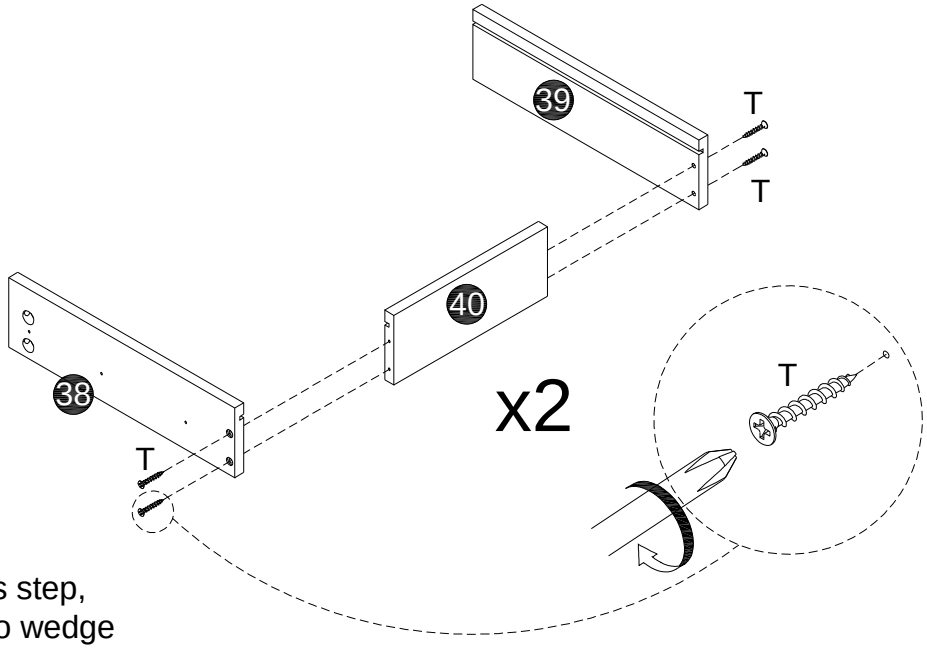

After assembling this step, use the foam pieces to wedge and flip it 90 degrees.

67

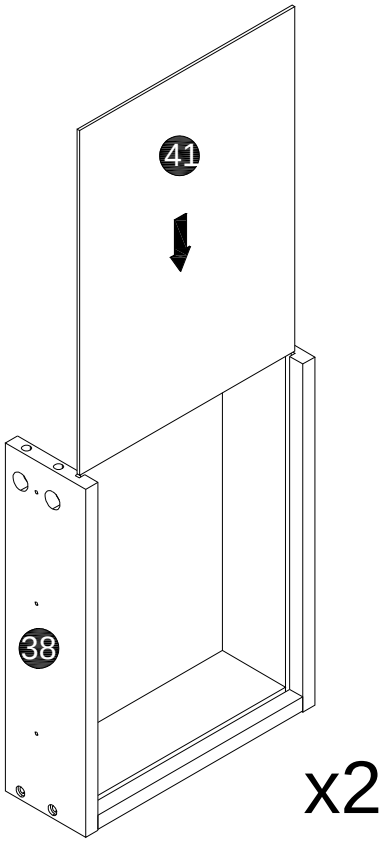

68

B x8
Ø15x9.5mm

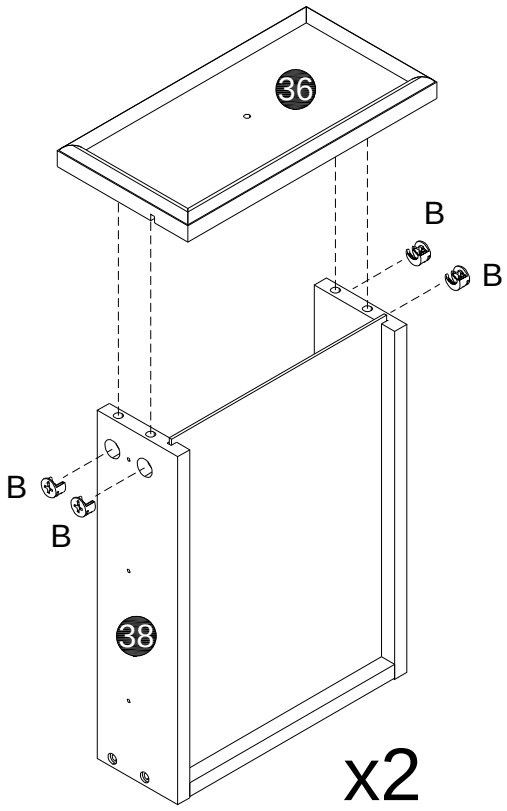

69

D x6
Ø3.5x12mm

E2 x1

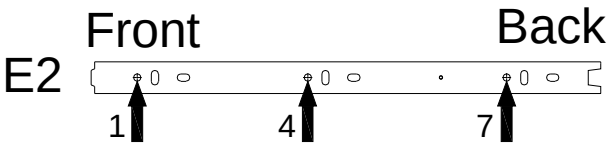

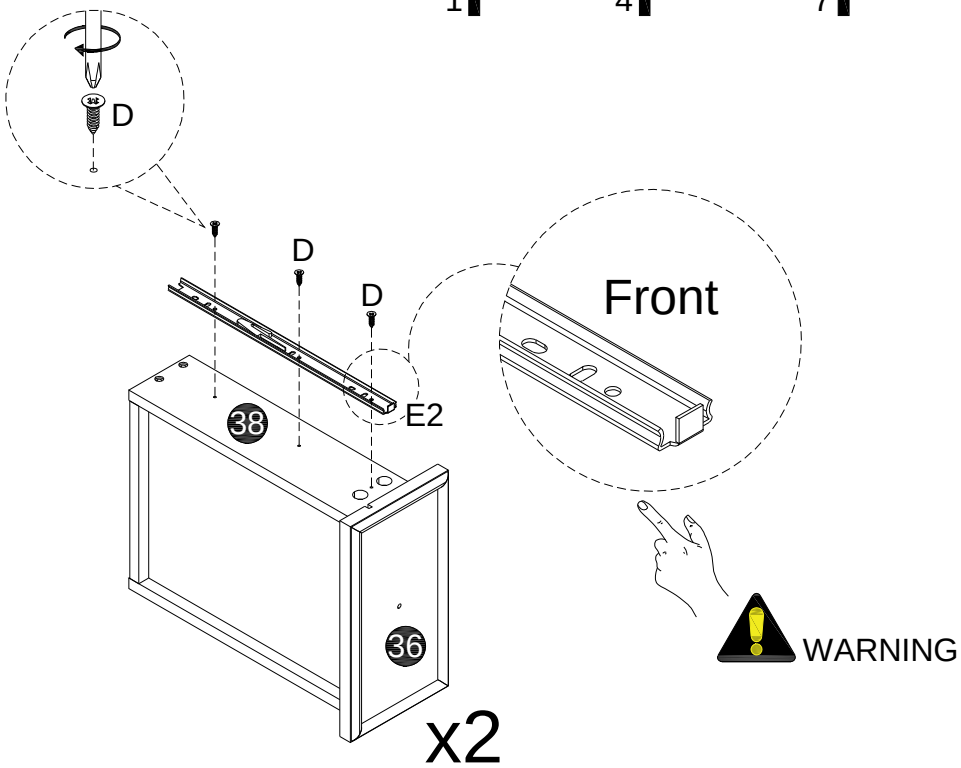

70

D x6
Ø3.5x12mm

E2 x1

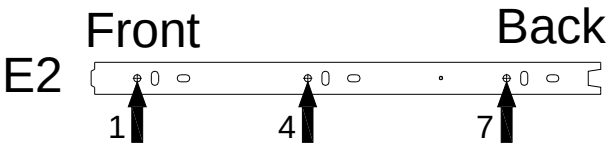

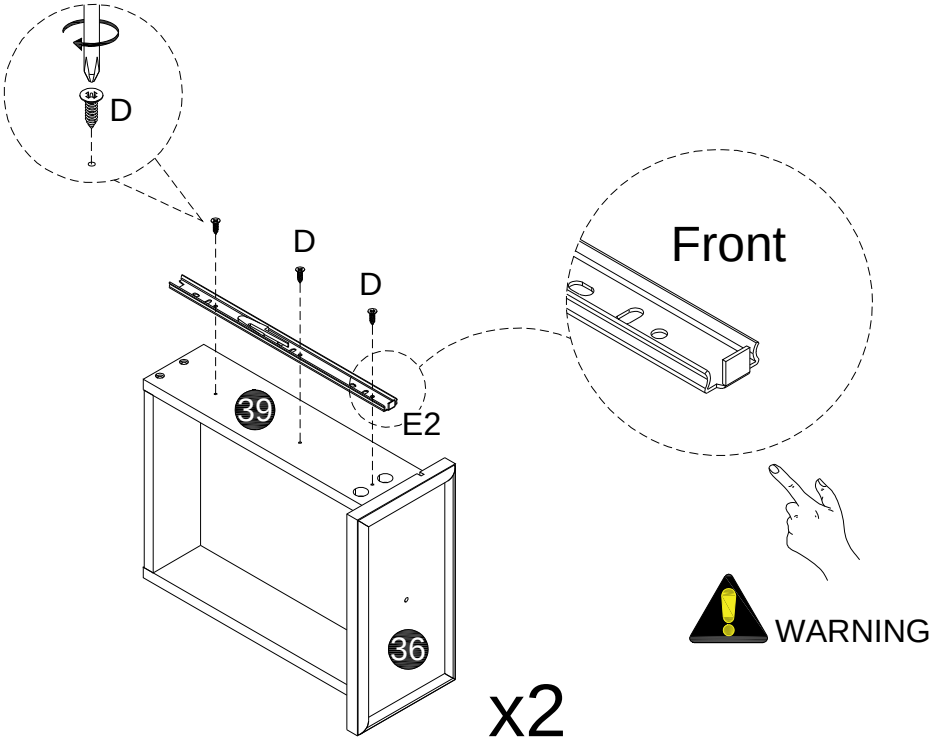

71

L x2
5/32''x10mm

K x2

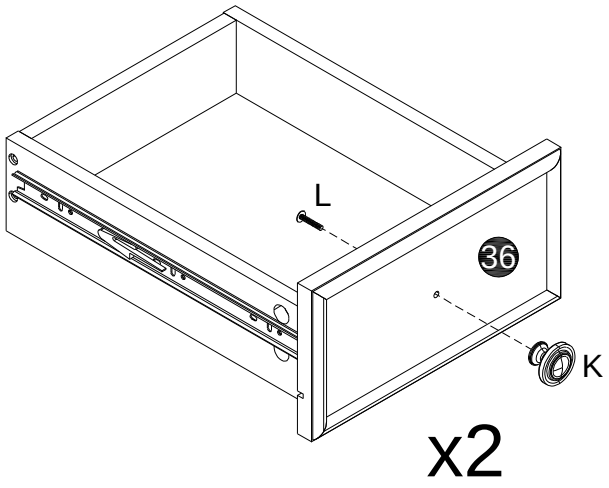

72

T x16
Ø4x38mm

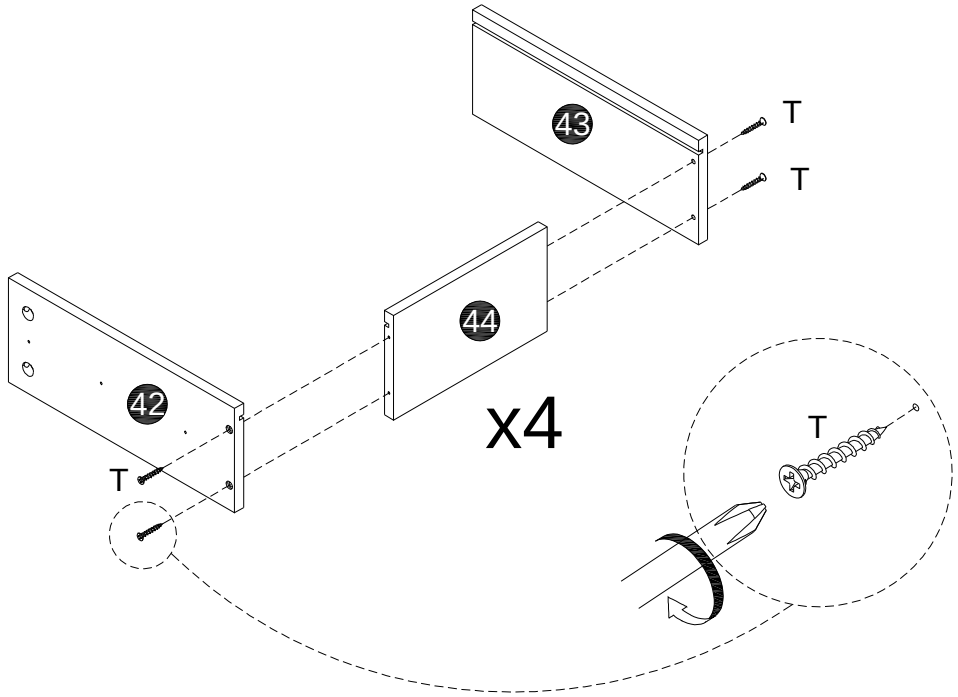

73

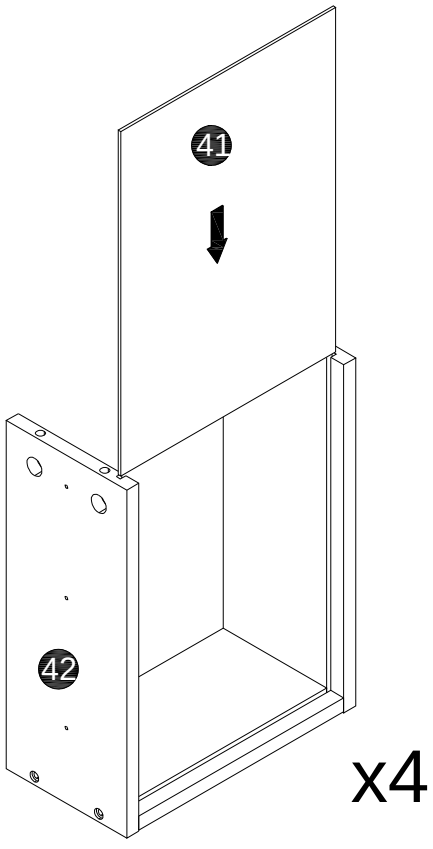

74

B  x16

Ø15x9.5mm

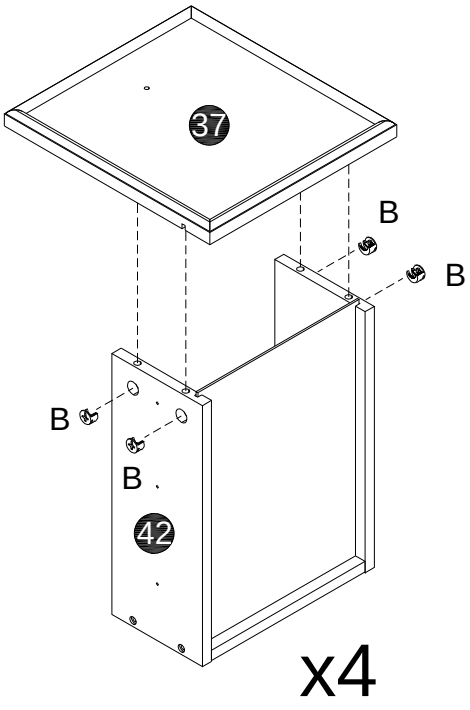

75

D  x12

Ø3.5x12mm

E2 x1

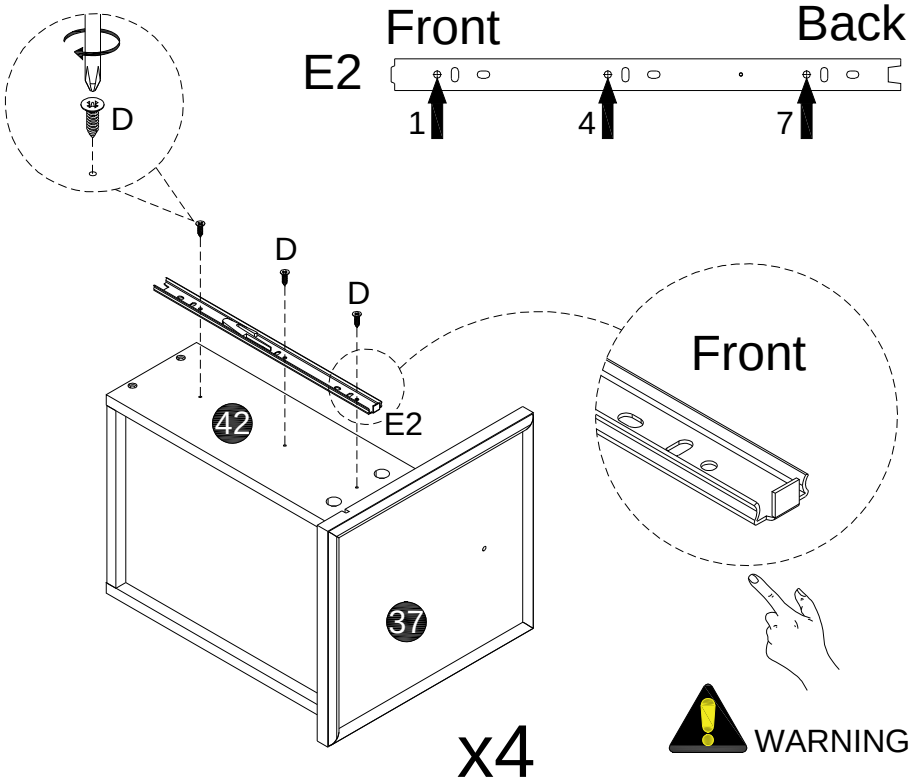

76

D x12
Ø3.5x12mm

E2 x1

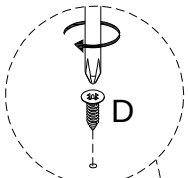

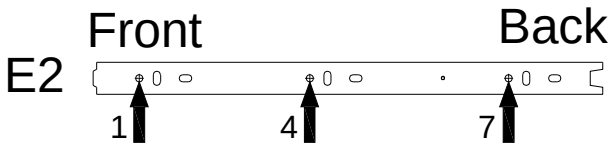

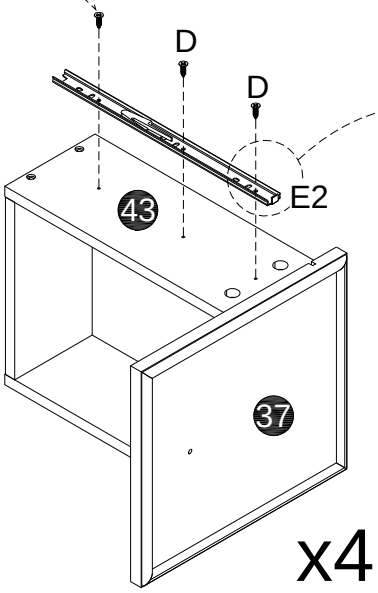

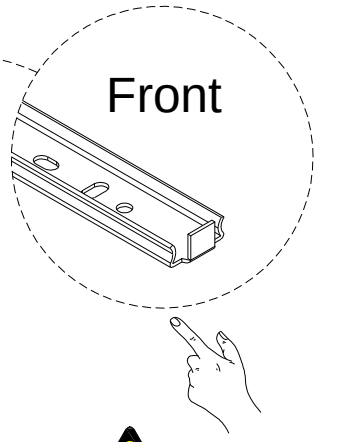



77

L x4
5/32''x10mm

K x4

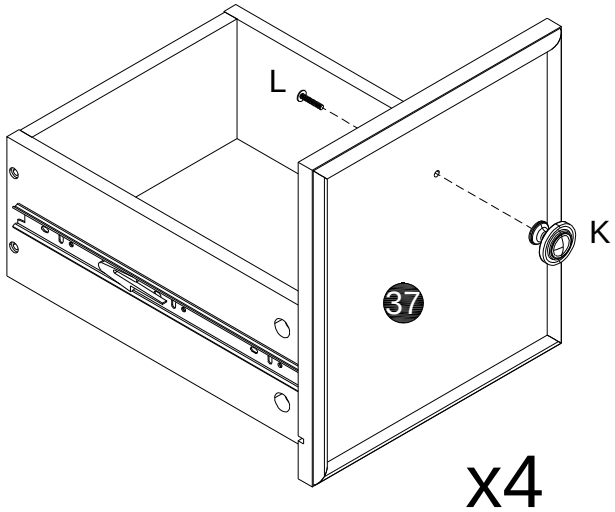

78

T x6
Ø4x38mm

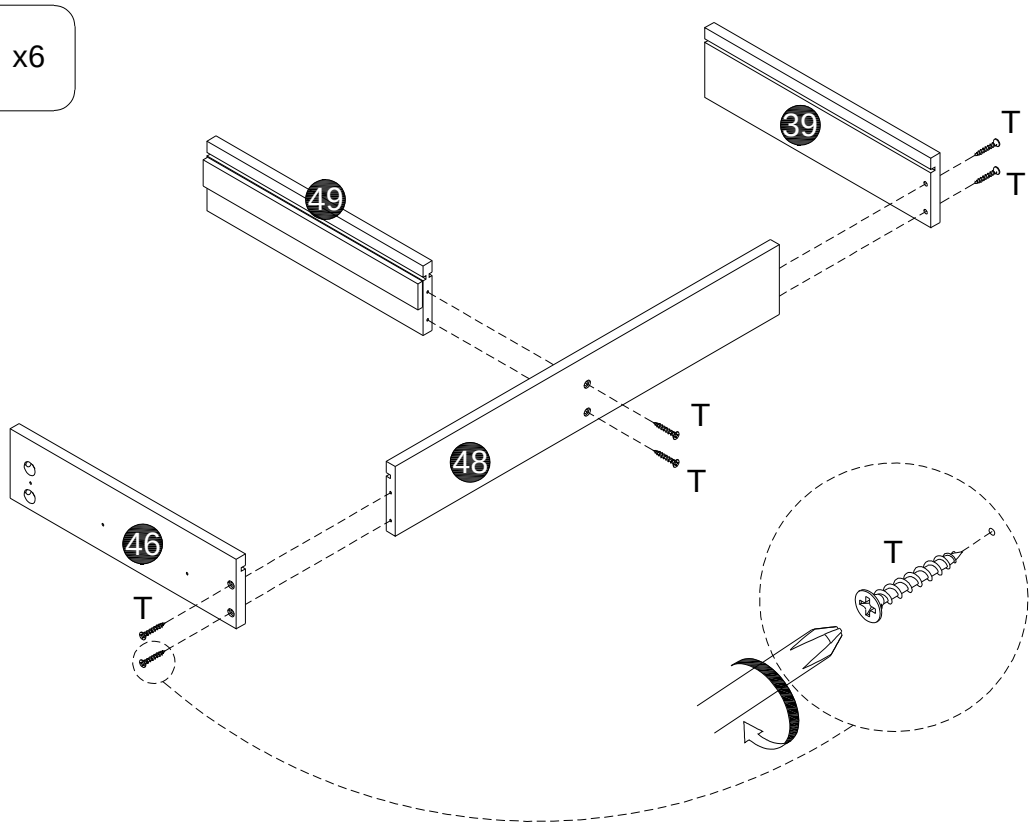

79

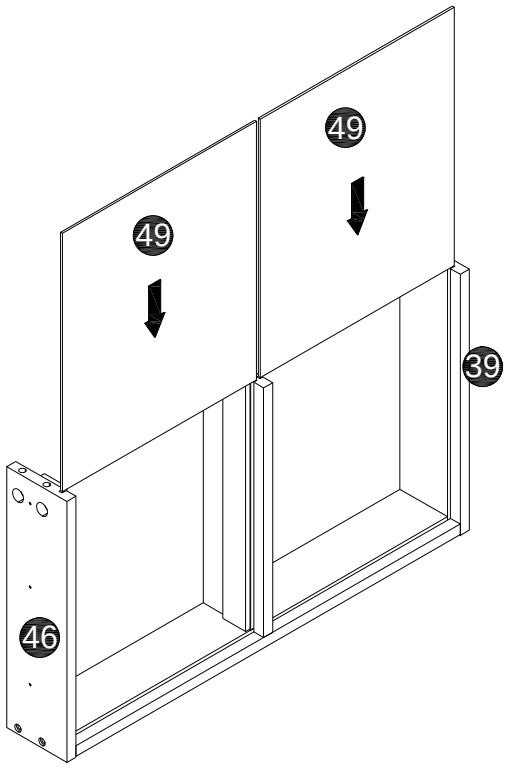

80

B x6
Ø15x9.5mm

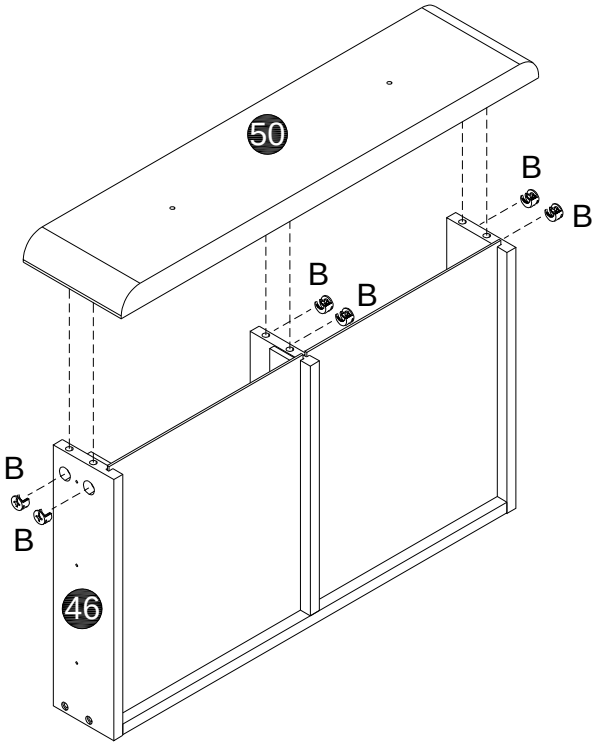

81

D x3
Ø3.5x12mm

E2 x1

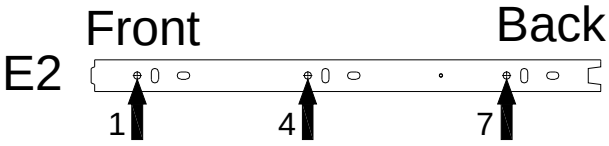

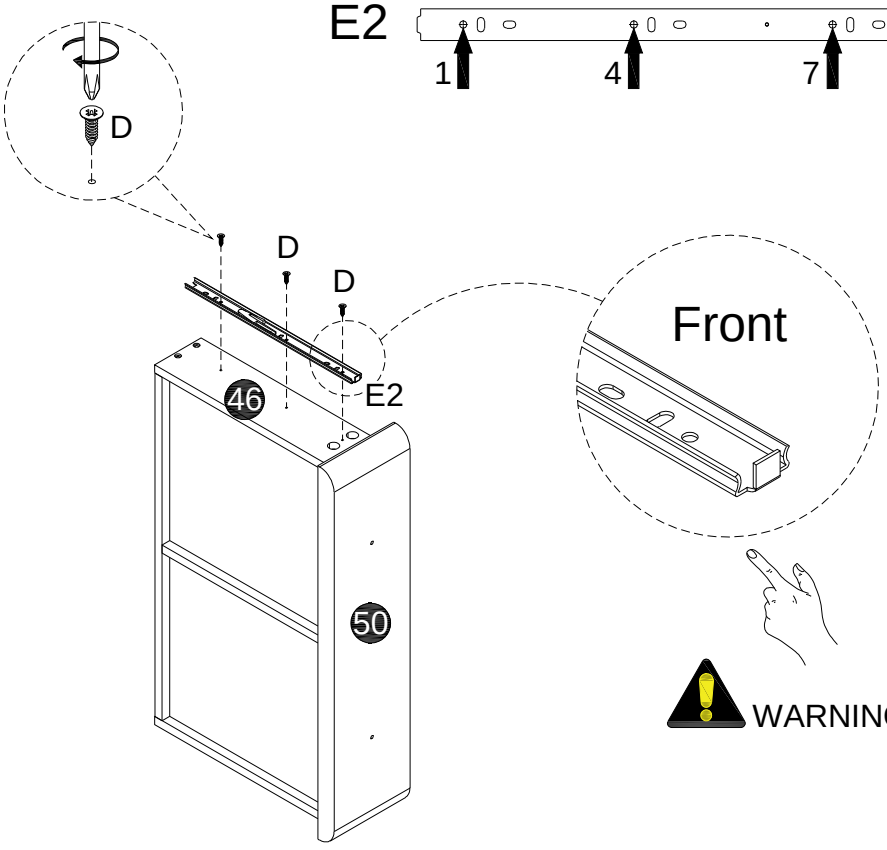

82

D x3
Ø3.5x12mm

E2 x1

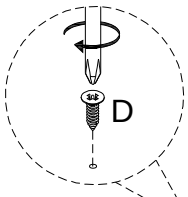

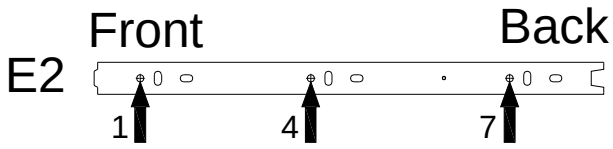

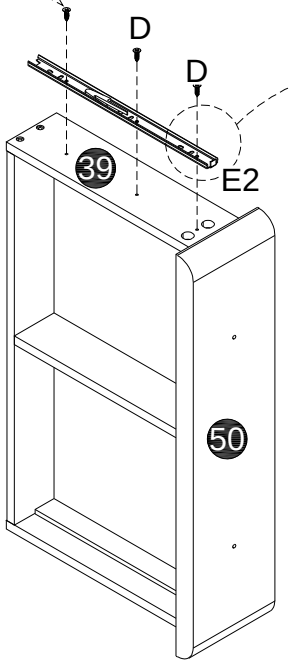

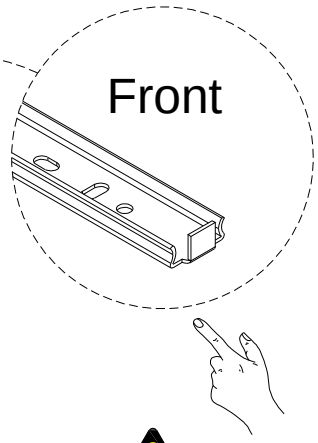

83

L 5/32''x10mm x2

K x2

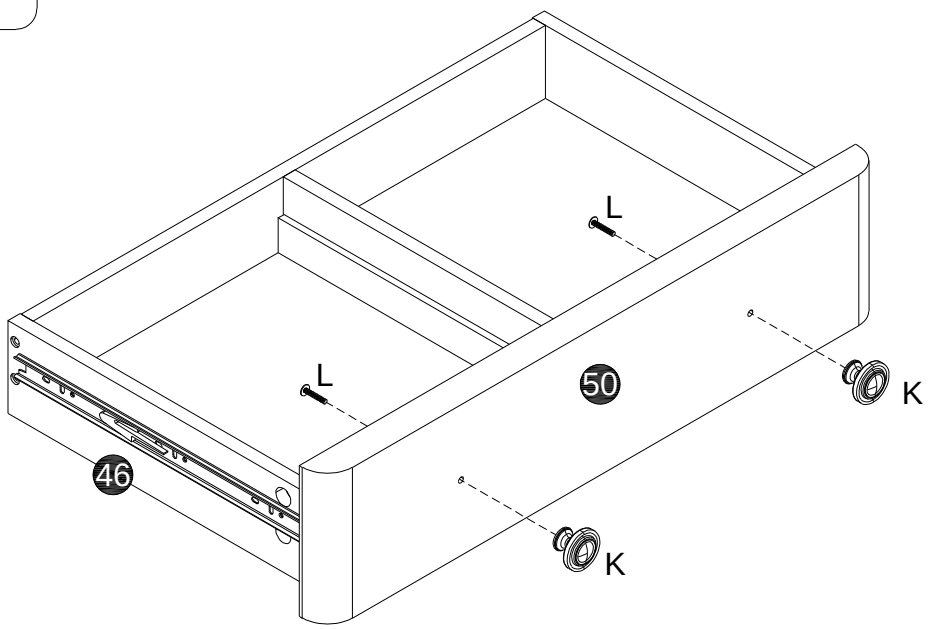

84

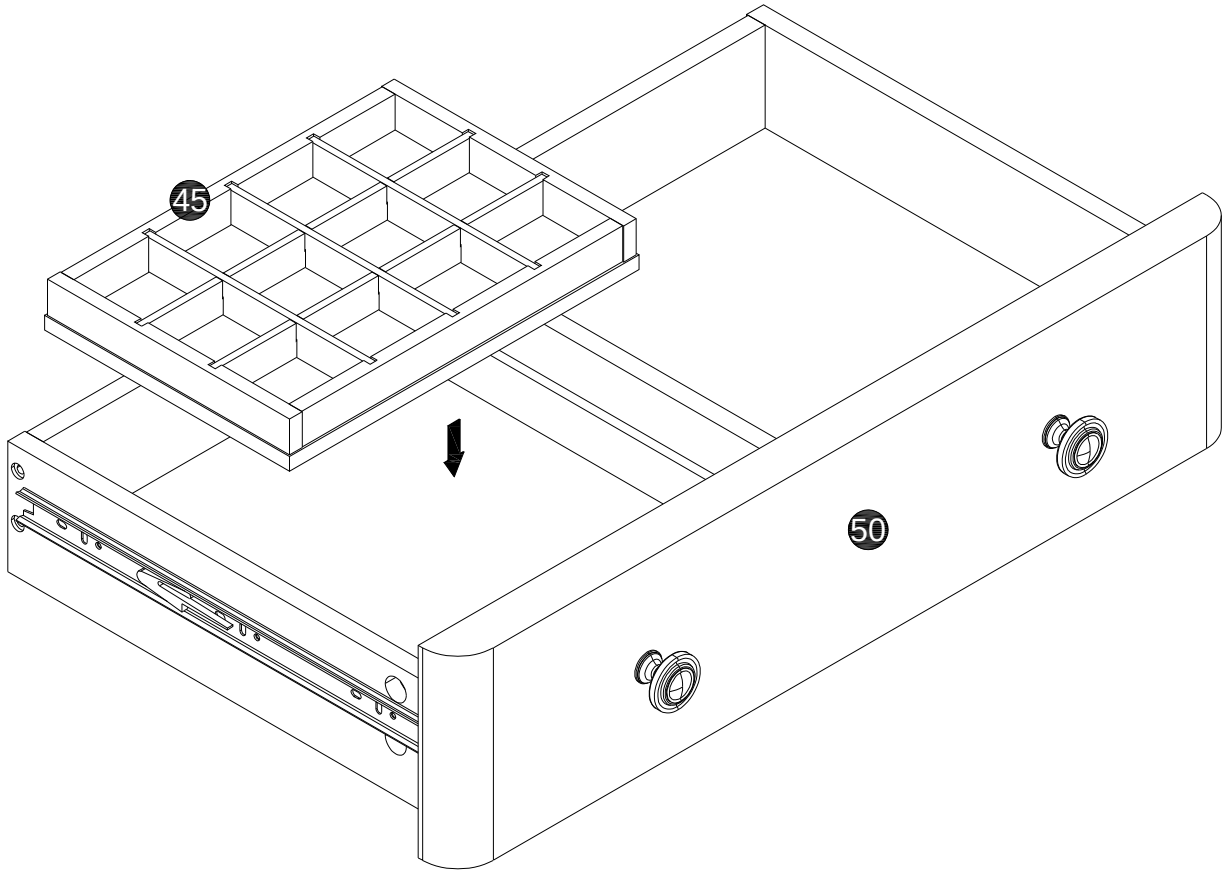

85

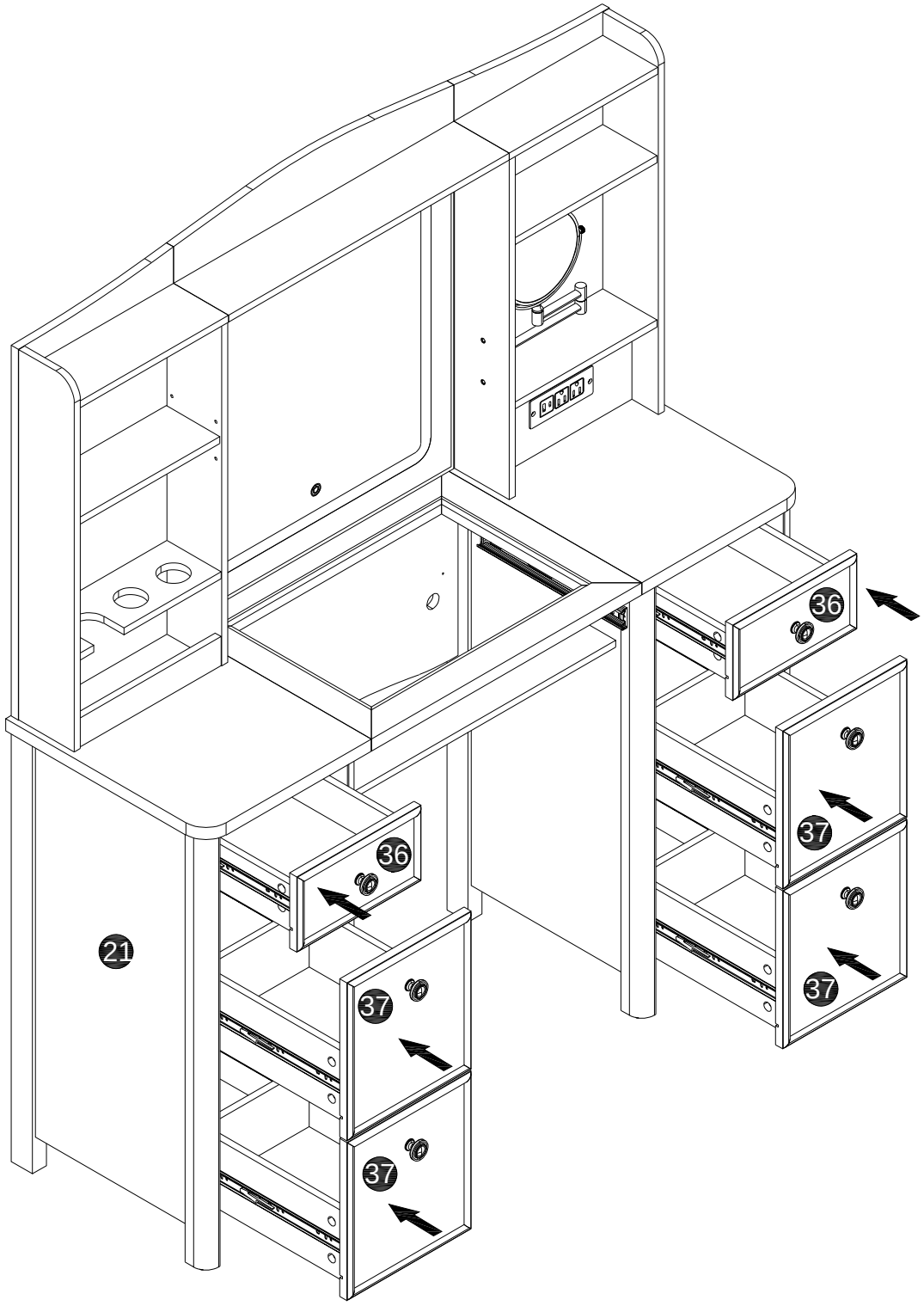

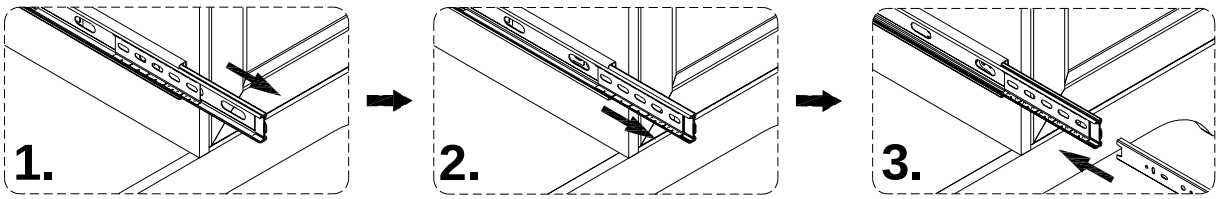

Notice: Ensure to asemble into the drawer to the corresponding position as the drawing show.

86

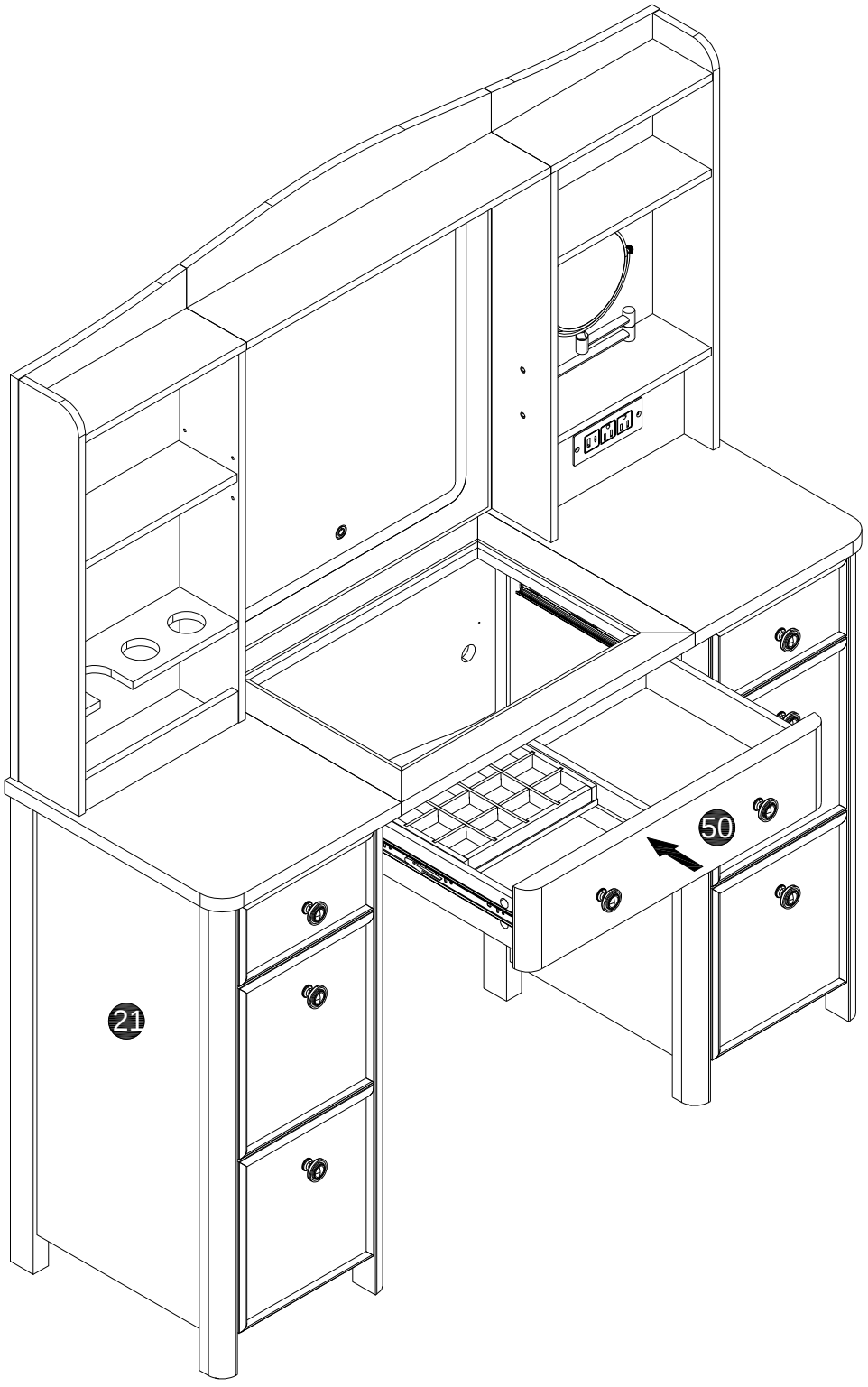

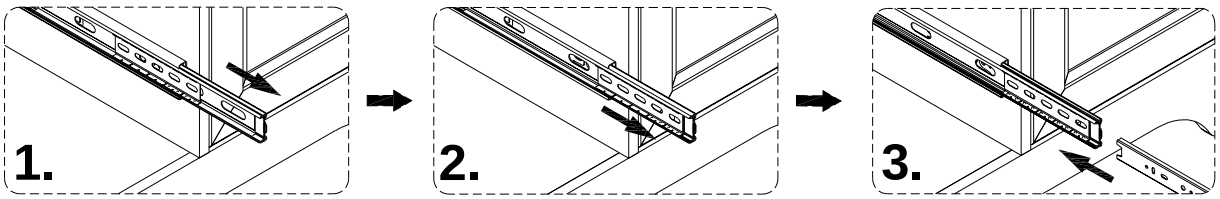

Notice: Ensure to asemble into the drawer to the corresponding position as the drawing show.

87

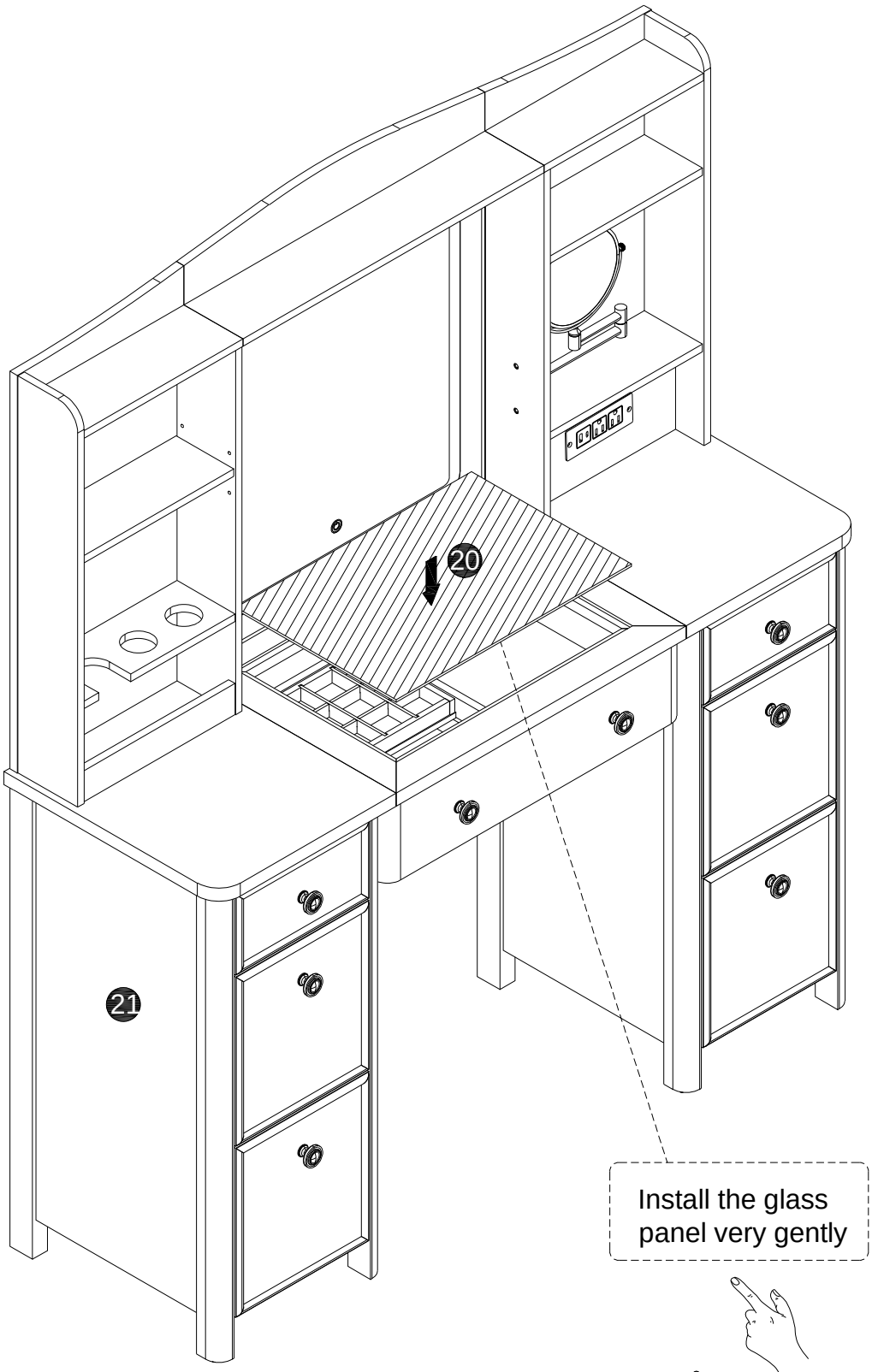

88

U	Ø25	x100
V	Ø25	x4

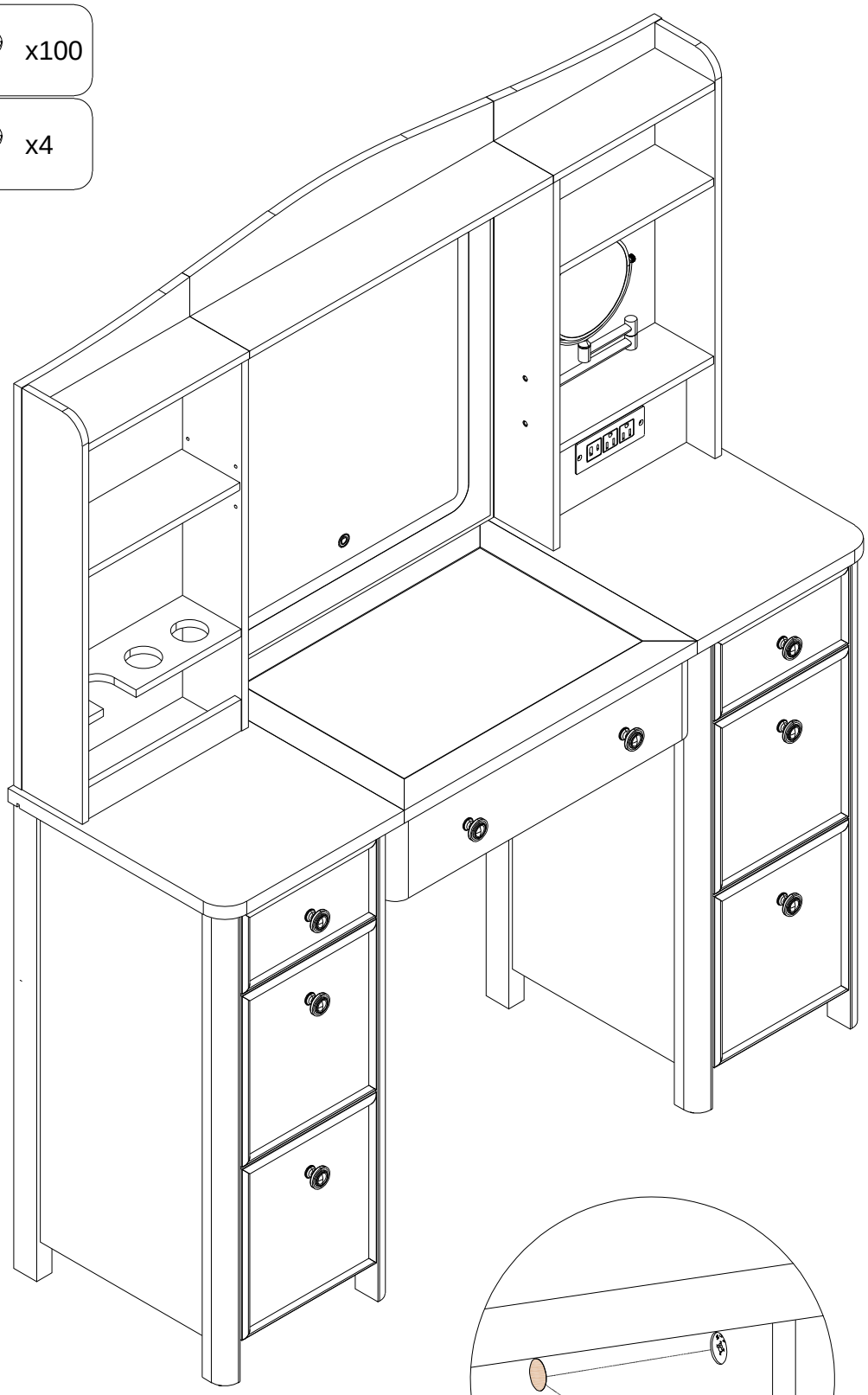

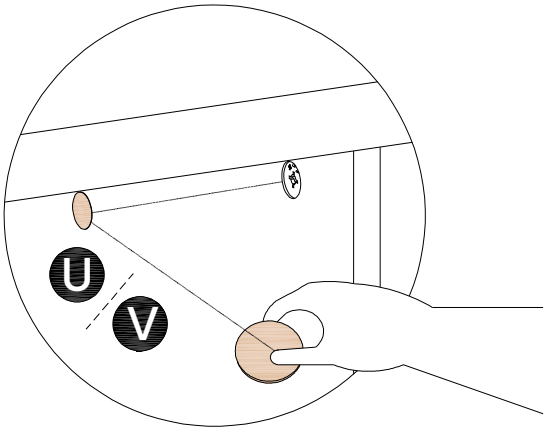

Note: After assembly,cover the holes.
For two-tone cabinets, match the stickers with the colors.

89

ASSEMBLY COMPLETED

