Dimensions

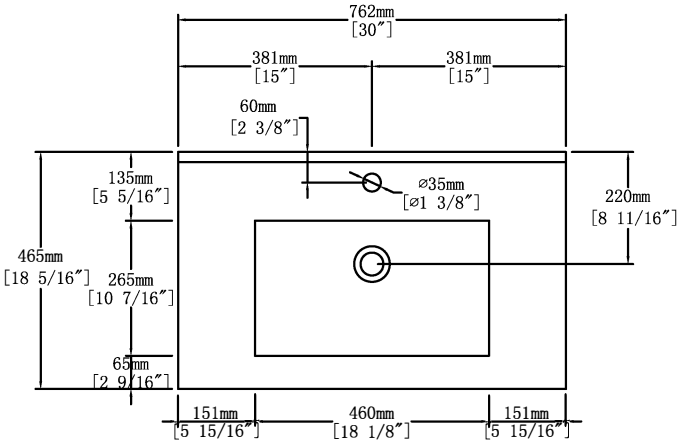

Top View

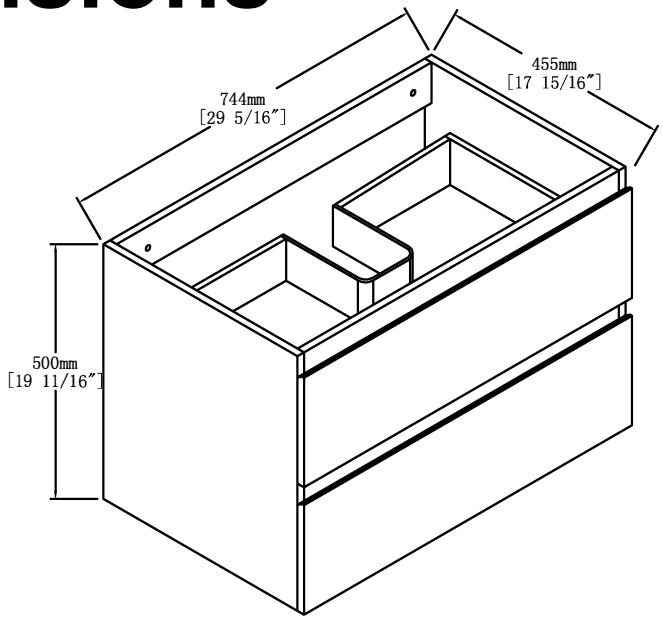

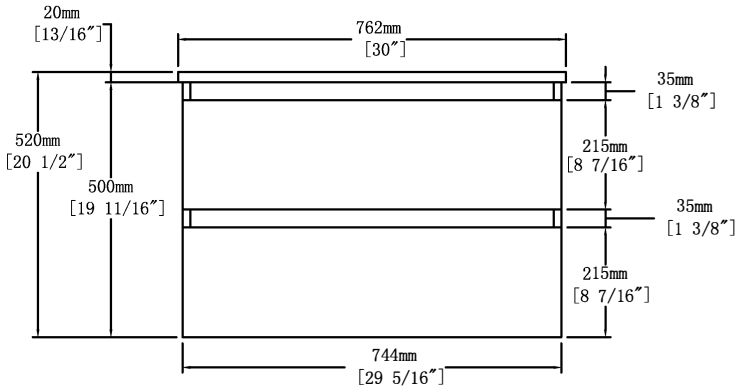

Front View

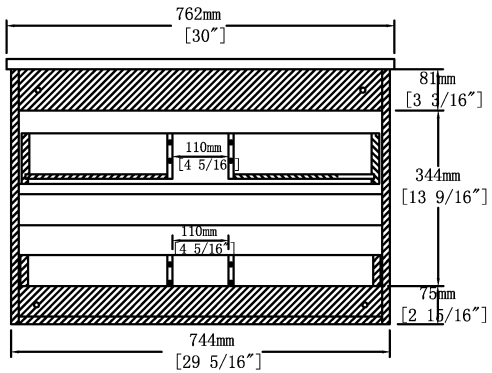

Back View

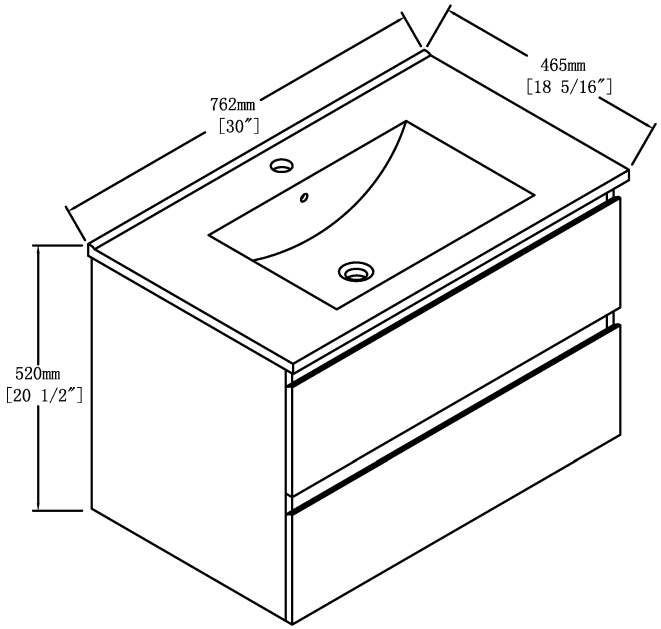

		Version	V1
Project		Date	2024-3-19