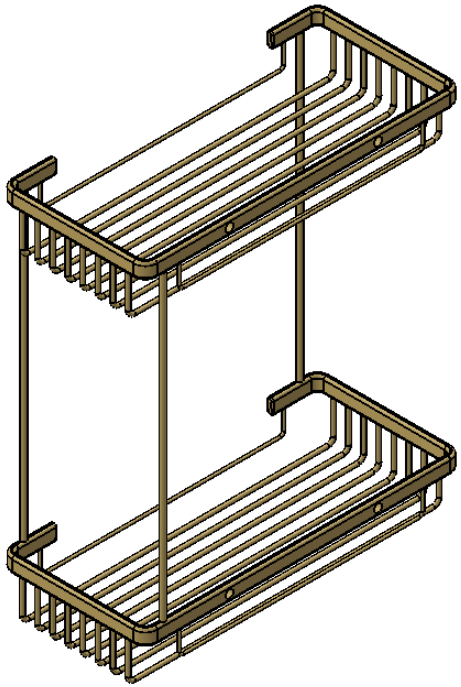

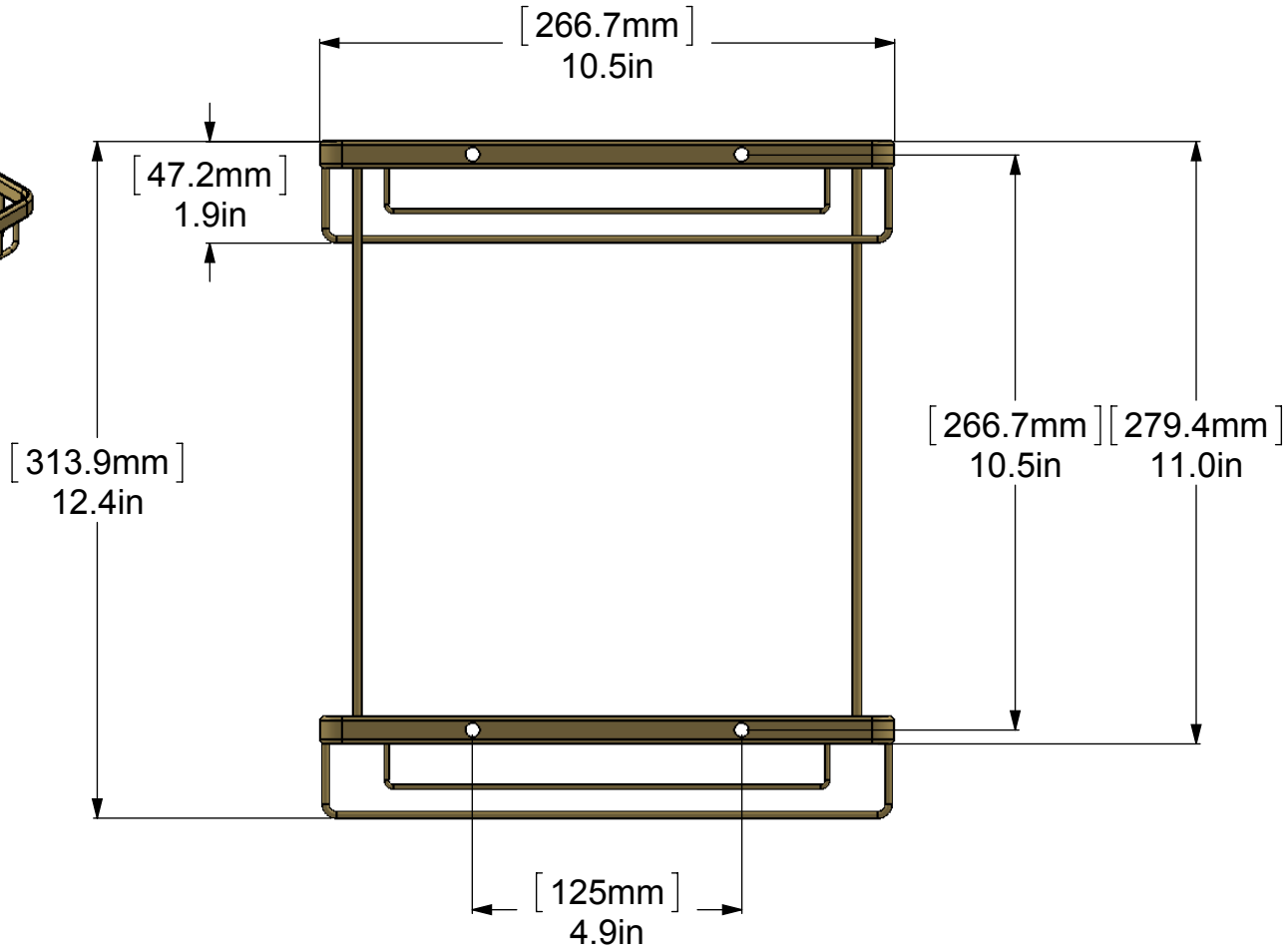

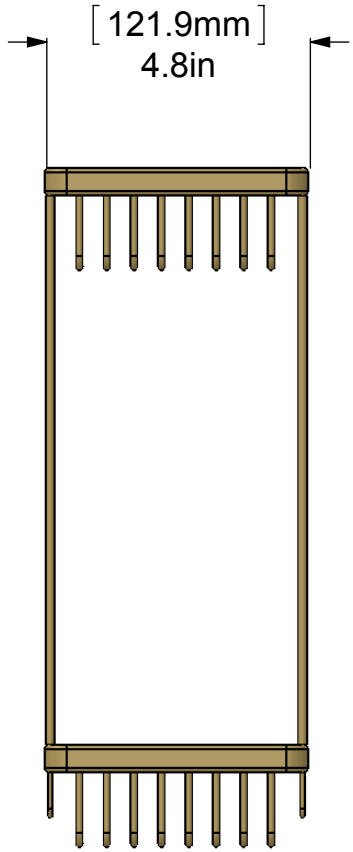

UNLESS OTHERWISE STATED			INITIALS	DATE	ITEM	QTY	DRG/PART NO	CLIENT:		
DO NOT SCALE DRAWING	X.XXX +/-0.025	DESIGNED			MATERIAL	BRASS	WEIGHT		FINISH	TBD
CHAMFER ALL EDGES 0.5X45°	X.XX +/-0.1	DRAWN			HEAT TREAT	NA			QUANTITY	
DRAWING ISO	X.X +/-0.25	CHECKED			CUSTOMER		CUSTOMER No		---	
	X +/-0.75	PROJ.ENG								
	ANGLES	SAFETY								
	X.XX +/-0.05°	APPROVED								
	X.X +/-0.1°	FILENAME								
	X +/-0.5°									
FIRST ANGLE PROJECTION	MACHINED FINISH 3.2								SCALE 1:3.5	SHEET: 01 A4