Model number:
**GB-2605-424-BL**

# DIMENSIONS
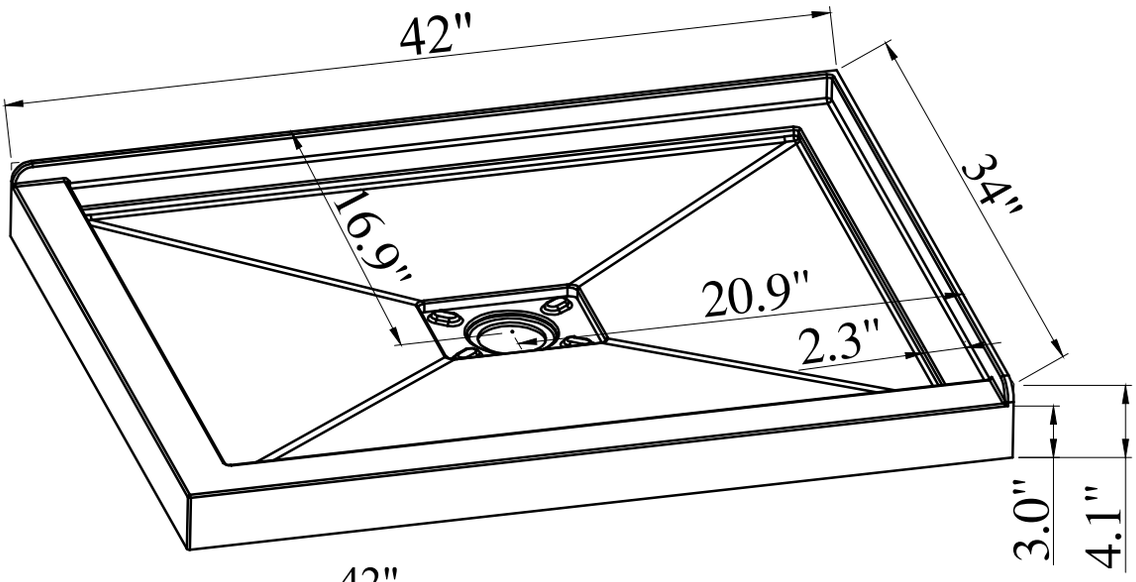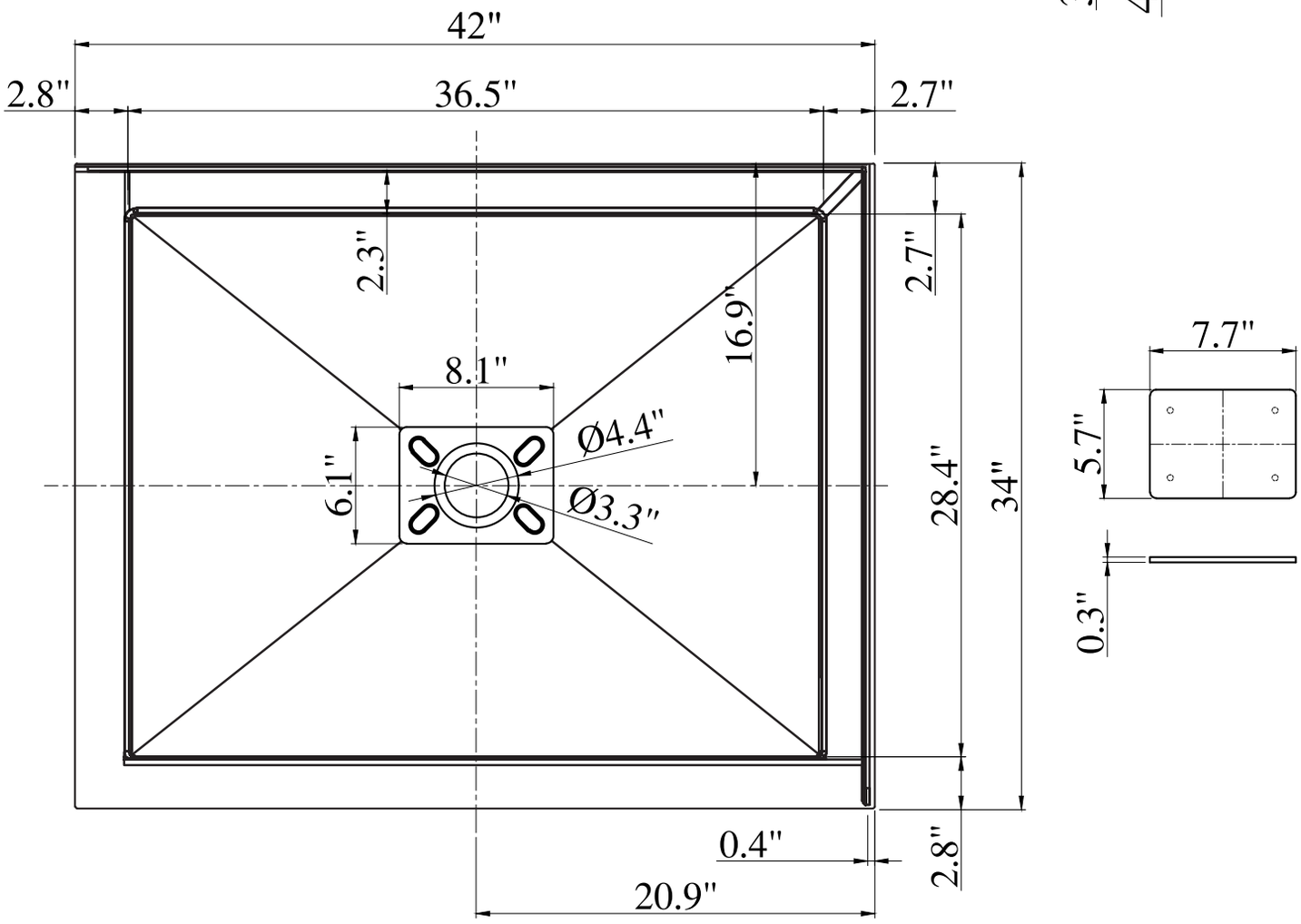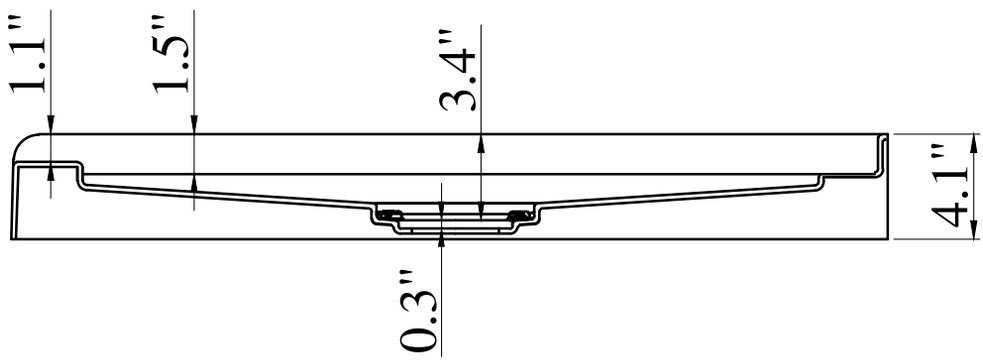
Streamline